TAKE NOTICE THAT A REGULAR MEETING
OF THE BOARD OF COMMISSIONERS
OF THE CITY OF PHARR, TEXAS
WILL BE HELD AT CITY HALL, COMMISSIONERS' ROOM,
118 S. CAGE BLVD., 2ND FLOOR, PHARR, TEXAS
COMMENCING AT 4:00 PM ON
MONDAY, AUGUST 18, 2025

The City of Pharr has called this meeting as allowed pursuant to Texas law, city charter, and city ordinances. The governing body may recess from day to day when it does not complete consideration of a particularly long subject as authorized by law. All persons desiring to address the governing body must register with the presiding city clerk prior to the scheduled meeting.

1. CALL TO ORDER:

A) Roll call and possible action on the excusing of any absent member of the governing board.

B) Pledge of Allegiance/Invocation

2. PUBLIC TESTIMONY: *(Ordinance No. O-2019-45). A person intending on addressing the governing body may speak at a scheduled meeting of the governing body following registration with the presiding clerk and prior to the scheduled meeting. A registered speaker may speak only on items on the agenda and may not exceed 1.5 minutes when addressing the board regarding an agenda item. A registered speaker may not donate time to another speaker. A sign-in form for public testimony shall be promulgated by the presiding clerk and be made available at the city clerk's office. A person may sign up for public testimony beginning at the time the agenda is posted for the meeting. A person may not sign up later than one hour before the posted meeting is scheduled to begin. No registered speaker may be allowed to speak regarding an item once the public testimony portion of the agenda has ended.*

3. PUBLIC HEARINGS: *(Ordinance No. O-2019-31). A registered speaker during the public hearing may not exceed 1.5 minutes when addressing the board. A sign-in form for participation in public a hearing shall be promulgated by the presiding clerk and be made available at the city clerk's office. The public hearing sign-in form shall include the person or entity's name, address, telephone number, other contact information, organization if applicable, and other notices, authorizations, and acknowledgements as may be allowed by law from time to time. No registered speaker may be allowed to address the governing body once the public hearing has closed.*

A) Public hearing on development services cases

4. CITY MANAGER'S REPORTS: *(City Manager's Administrative Reports and discussion, if any, with governing body. The City Manager may also assign a designated spokesperson for any particular listed topic)*

A) City Events of Interest

5. CONSENT AGENDA: *(All items listed under consent Agenda are considered to be routine and non-controversial by the Governing Body and will be enacted by one motion. Any Commissioner may remove items from the consent agenda by making such request prior to a motion and vote on the Consent Agenda)*

A) Approval of Minutes for August 11, 2025 - Special Called Meeting. **This item supports SG - Sound Governance and Fiscal Sustainability.** (ADMINISTRATION)

B) Consideration and action, if any, on Ordinance creating Office of City Clerk Department. ***(3rd and Final Reading)*** **This item supports SG - Sound Governance and Fiscal Sustainability.** (ADMINISTRATION)

C) Consideration and action, if any, on Ordinance creating the Food Services Department. ***(3rd and Final Reading)*** **This item supports SG - Sound Governance and Fiscal Sustainability.** (ADMINISTRATION)

D) Consideration and action, if any, on Ordinance directing the City Manager to vacate, abandon, and close a 10 ft. by 270.29 ft. Alley Easement, consisting of 0.06 of an acre (2,702.90 square feet) located on Lot 14, Block 160, L.R. Bell Development "E", Pharr, Hidalgo County, Texas ***(3rd and Final Reading)***. **This item supports EV - Economic Vitality.** (DEVELOPMENT SERVICES)

E) Consideration and action, if any, on request from Hidalgo County Elections Department on use of Pharr Memorial Library and Pharr One for Election Day polling locations on Tuesday, November 4, 2025 and possible runoff election in December 2025. **This item supports SG - Sound Governance and Fiscal Sustainability.** (ADMINISTRATION)

F) Consideration and action, if any, on Interlocal Agreement Extension between City of Pharr and Hidalgo County Head Start Program for center located at 413 E. Clark (Pharr Head Start Center). **This item supports QL - Quality of Life.** (ADMINISTRATION)

G) Consideration and action, if any, on Interlocal Agreement Extension between City of Pharr and Hidalgo County Head Start Program for center located at 714 Zapata Street (Las Milpas I Head Start Center). **This item supports QL - Quality of Life.** (ADMINISTRATION)

H) Consideration and action, if any, on Development Services Cases:

1. Martin Talavera, DBA Katosabi Sushi Bar, has filed with the Planning and Zoning Commission a request for a Conditional Use Permit and Late Hours Permit to allow the sale of alcoholic beverages for on-premise consumption. The property is legally described as being 0.070 acres, more or less, out of Lot A, Medical Ridge Subdivision, Pharr, Hidalgo County, Texas. The property is physically located at 1401 South Jackson Road, Suites 7 & 8. CUP#250708 **This item supports EV - Economic Vitality.**

2. Pappas Restaurants, Inc., d/b/a Pappadeaux Seafood Kitchen, is requesting renewal of the Conditional Use Permit to allow the sale of alcoholic beverages for on-premise consumption. The property is legally described as Lot 2, Pappas Subdivision, Pharr, Hidalgo County, Texas. The property's physical address is 1610 West Expressway 83. CUP#100103 **This item supports EV - Economic Vitality.**

3. Balli Investments and Holdings LLC., d/b/a Calacas Tacos and Beer, is requesting renewal of the Conditional Use Permit to allow the sale of alcoholic beverages for on-premise consumption. The property is legally described as being 0.062 acres, more or less, out of Lot 1, Junction View Subdivision, Pharr, Hidalgo County, Texas. The property's physical address is 2101 North Cage Boulevard, Suites 110 and 111. CUP#220845 **This item supports EV - Economic Vitality.**

4. Rommel Organista, d/b/a Kurai Chinese & Sushi Restaurant, is requesting renewal of the Conditional Use Permit to allow the sale of alcoholic beverages for on-premise consumption. The property is legally described as Lot 1, Jackson Ridge Court Phase II Subdivision, Pharr, Hidalgo County, Texas. The property's physical address is 1201 South Jackson Road, Suite 1. CUP#120424 **This item supports EV - Economic Vitality.**

5. Edinburg RAM, LLC, dba Khan's Grill, is requesting renewal of the Conditional Use Permit and Late Hours Permit to allow the sale of alcoholic beverages for on-premise consumption. The property is legally described as being Lot 6A, Jackson Ridge Court Subdivision Phase III – Amended Plat, Pharr, Hidalgo County, Texas. The property's physical address is 1005 South Jackson Road. CUP#180644 **This item supports EV - Economic Vitality.**

6. Velch Ventures LLC., d/b/a Altamar Seafood Bar, is requesting renewal of the Conditional Use Permit to allow the sale of alcoholic beverages for on-premise consumption. The property is legally described as being .092 acres, more or less, out of Lot 1, Spamer Business Park Subdivision, Pharr, Hidalgo County, Texas. The property's physical address is 8001 South Jackson Road, Suites 1 & 2. CUP#210427 **This item supports EV - Economic Vitality.**

7. Mario Alberto Torres, d/b/a On the Grill Restaurant, is requesting renewal of the Conditional Use Permit to allow the sale of alcoholic beverages for on-premise consumption. The property is legally described as 0.075 of an acre, more or less, out of Lot 1, Jackson Ridge Court Subdivision Phase II, Pharr, Hidalgo County, Texas. The property's physical address is 1201 South Jackson Road, Suite 7. CUP#170740 **This item supports EV - Economic Vitality.**

8. Macumba Paradise, LLC., d/b/a La Cabaña Sinaloense, is requesting renewal of the Conditional Use Permit and Late Hours Permit to allow the sale of alcoholic beverages for on-premise consumption. The property is legally described as being Lot 97, Kelly-Pharr Subdivision, Pharr, Hidalgo County, Texas. The property is physically located at 1209 East Nolana Loop. CUP#160736 **This item supports EV - Economic Vitality.**

9. 7-Eleven Inc. DBA 7-Eleven Convenience Store's and Stripes Stores, is requesting renewal of the Conditional Use Permit to allow the sale of alcoholic beverages for on-premise consumption. The property is legally described as being all of Lot "A", Cordova Estates, an addition to the City of Pharr, Hidalgo County, Texas. The property's physical address is 1510 West Military Highway. CUP#24013 **This item supports EV - Economic Vitality.**

REGULAR AGENDA - OPEN SESSION:

6. ORDINANCES AND RESOLUTIONS:

A) Consideration and action, if any, on Resolution appointing/re-appointing six (6) members to the Tax Increment Reinvestment Zone No. 1. **This item supports SG - Sound Governance and Fiscal Sustainability.** (ADMINISTRATION)

B) Consideration and action, if any, on Resolution appointing/re-appointing six (6) members to the Tax Increment Reinvestment Zone No. 2. **This item supports SG - Sound Governance and Fiscal Sustainability.** (ADMINISTRATION)

C) Consideration and action, if any, on Resolution appointing/re-appointing seven (7) members to the Pharr Public Facilities Corporation #3. **This item supports SG - Sound Governance and Fiscal Sustainability.** (ADMINISTRATION)

D) Consideration and action, if any, on Resolution appointing/reappointing two (2) regular members and one (1) alternate member to the Planning and Zoning Commission. **This item supports SG - Sound Governance and Fiscal Sustainability.** (DEVELOPMENT SERVICES)

7. ADMINISTRATIVE:

A) Discussion and action for vote on Proposed Tax Rate increase and schedule a Public Hearing. **This item supports SG - Sound Governance and Fiscal Sustainability.** (FINANCE)

B) Submission of Certified Totals for Tax Assessed Values 2025 for Fiscal Year 2025-2026. **This item supports SG - Sound Governance and Fiscal Sustainability**. (FINANCE)

8. PURCHASING:

A) Consideration and action, if any, authorizing Pharr Police Department to purchase two (2) self-sufficient surveillance mobile trailers using Operation LoneStar FY2025 Grant #5059901. **This item supports SSC - Safe and Secure Community** (POLICE)

9. CONTRACTS/AGREEMENTS:

A) Consideration and action, if any, on Change Order Number 1 in the amount of $22,835.40 and the addition of 30 working days to the construction contract with D. Wilson Construction Company for the Donation Acceptance Program for Fiscal Year 2016. **This item supports IF - Infrastructure.** (ENGINEERING)

10. CLOSED SESSION: *In accordance with Chapter 551 of the Texas Gov't. Code, the Pharr Board of Commissioners hereby gives notice that it may meet in a closed (non-public) executive session to discuss the items listed on the public portion of the meeting agenda in accordance with the following below:*

Pursuant to Section 551.071, the Board may convene in a closed, non-public meeting with its attorney and discuss any matters related **to legal advice on pending or contemplated litigation, settlement offer, and/or on a matter in which the duty of the attorney to the governmental body under the Texas Disciplinary Rules of Professional Conduct of the State Bar of Texas clearly conflicts with this chapter.** The City and its attorney may also discuss such issues with the appropriate staff so as to obtain necessary and relevant information so that such discussion is informative and developed.

Pursuant to Section 551.072, the Board may convene in a closed, non-public meeting to discuss any matters related to **real property and deliberate the purchase, exchange, lease, or value of real property as such would be detrimental to negotiations between the City and a third party in an open meeting.** The City and its attorney may also discuss such issues with the appropriate staff so as to obtain necessary and relevant information so that such discussion is informative and developed.

Pursuant to Section 551.074, the Board may convene in a closed, non-public meeting to discuss any matters related to **appointment, employment, evaluation, reassignment, duties and discipline or dismissal of a public officer or employee and to hear any complaints or charges against an officer or employee.** The City and its attorney may also discuss such issues with the appropriate staff including members so as to obtain necessary and relevant information so that such discussion is informative and developed.

Pursuant to Section 551.076, the Board may convene in a closed, non-public meeting to discuss any matters on the **deployment, or specific occasions for implementation, of security personnel or devices**. The City and its attorney may also discuss such issues with the appropriate staff so as to obtain necessary and relevant information so that such discussion is informative and developed.

Pursuant to Section 551.084, the Board may convene in a closed, non-public meeting to discuss any matters involving an **investigation and may exclude a witness from hearing during the examination of another witness in the investigation.** The City and its attorney may also discuss such issues with the appropriate staff so as to obtain necessary and relevant information so that such discussion is informative and developed.

Pursuant to Section 551.087, the Board may convene in a closed, non-public meeting to discuss any matters regarding **economic development issues.** The City and its attorney may also discuss such issues with the appropriate staff so as to obtain necessary and relevant information so that such discussion is informative and developed.

11. RECONVENE: *into Regular Session and consider action, if necessary, on any items(s) discussed in closed session.*

12. ADJOURNMENT:

NOTICE OF ASSISTANCE AT THE PUBLIC MEETING

City Hall is wheelchair accessible and accessible parking spaces are available. Requests for accommodations or interpretive services must be made 48 hours prior to this meeting. Please contact the City Clerk's Office at 956-402-4200 Ext 1201 or FAX 956-475-3442 or Email cityclerksoffice@pharr-tx.gov for further information. Braille is not available.

I, the undersigned authority, do hereby certify that the above notice of said Regular Meeting of the City Commission of the City of Pharr was posted on the bulletin board at City Hall and on the City's web page at www.pharr-tx.gov. This Notice was posted on the 15th day of August 2025 at 4:00 p.m. and will remain posted continuously for at least 72 hours preceding the scheduled time of said Meeting, in compliance with Chapter 551 of the Government Code, Vernon's Texas Codes, Annotated (Open Meetings Act).

WITNESS MY HAND AND SEAL, this 15th day of August 2025

ALESSANDRA GARCIA, CPM
ASSISTANT CITY CLERK

I certify that the attached notice and agenda of items to be considered by the City Commission was removed from the bulletin board of City Hall on the _____ day of _____, 20___ by,

Name:_____ Title: _____

AGENDA MEMORANDUM

BOARD: BOARD OF COMMISSIONERS

AGENDA ITEM #: 3.A.
DATE SUBMITTED: August 12, 2025
MEETING DATE: August 18, 2025

FROM: Alessandra Garcia, Assistant City Clerk

DEPARTMENT: Administration

DIRECTOR:

Agenda Item: Public hearing on development services cases

Classification: Regular
(* If closed session, City Attorney must review and approve.)

Issue:

Fiscal Consideration:

Staff Recommendation:

Alternatives:

Exclude Material from Public Packet? No
Reason:

ROUTING:

Alessandra Garcia Created/Initiated - 08/12/2025

AGENDA MEMORANDUM

BOARD: BOARD OF COMMISSIONERS

AGENDA ITEM #: 4.A.
DATE SUBMITTED: August 12, 2025
MEETING DATE: August 18, 2025

FROM: Alessandra Garcia, Assistant City Clerk

DEPARTMENT: Administration

DIRECTOR:

Agenda Item: City Events of Interest

Classification: Regular
(* If closed session, City Attorney must review and approve.)

Issue:

Fiscal Consideration:

Staff Recommendation:

Alternatives:

Exclude Material from Public Packet? No
Reason:

ROUTING:

Alessandra Garcia Created/Initiated - 08/12/2025

AGENDA MEMORANDUM

BOARD: BOARD OF COMMISSIONERS

AGENDA ITEM #: 5.A.
DATE SUBMITTED: August 12, 2025
MEETING DATE: August 18, 2025

FROM: Imelda Perez, City Clerk

DEPARTMENT: Administration

DIRECTOR: Imelda Perez

Agenda Item: Approval of Minutes for August 11, 2025 - Special Called Meeting. **This item supports SG - Sound Governance and Fiscal Sustainability.**

Classification: Consent
(* If closed session, City Attorney must review and approve.)

Issue: Approval of Minutes for August 11, 2025 - Special Called Meeting.

Fiscal Consideration: N/A

Staff Recommendation: Staff recommends approval of Minutes.

Alternatives: N/A

Exclude Material from Public Packet? No
Reason: N/A

ROUTING:

Imelda Perez — Created/Initiated - 08/12/2025
City Management Office — Final Approval - 08/12/2025

MINUTES
BOARD OF COMMISSIONERS
SPECIAL CALLED MEETING
MONDAY, AUGUST 11, 2025
118 SOUTH CAGE 2nd FLOOR

The Board of Commissioners of the City of Pharr, Texas, met in a Special Called Meeting on Monday, August 11, 2025, and following is the record of attendance.

BOARD OF COMMISSIONERS PRESENT: Mayor Ambrosio Hernandez
Comm. Michael Pacheco
Comm. Roberto Carrillo
Comm. Ramiro Caballero
Comm. Daniel Chavez
Comm. Itza Flores

BOARD OF COMMISSIONERS ABSENT: Comm. Ricardo Medina

STAFF PRESENT: Jonathan Flores, City Manager
Cynthia Garza, Deputy City Manager
David Friedlein, Assistant City Manager
Hilda Pedraza, Assistant City Manager
Imelda Perez, City Clerk
Pilar Rodriguez, Interim City Engineer
Jamison Merrick, Finance Director
Veronica Ramirez, HR Director
Juan Villescas, Municipal Court Judge
Juan Gonzalez, Chief of Police
Pilar Rodriguez, Fire Chief
Roland Gomez, Code Compliance Director
Kimberly Mendoza, Dev. Srvcs. Director
Luis Marin, Public Works Director
Melanie Cano, O.S.E. Director
Ruben Rosales, Public Utilities Director
Sergio Alanis, Parks & Rec. Director
Adolfo Garcia, Library Director
Jose Pena, I.T. Director
Luis Bazan, Bridge Director
CJ Sanchez, Pharr Chamber President
Yuri Gonzalez, Chief Comm. Officer
Kenneth Ennis, P.S. Communications Dir.
Abel Molina, Interim Special Events Director
Elizabeth Diaz, Grants Management Director

CITY ATTORNEY Ricardo Rodriguez, City Attorney

ITEM 1. CALL TO ORDER

DRAFT

A) ROLL CALL AND POSSIBLE ACTION ON THE EXCUSING OF ANY ABSENT MEMBER OF THE GOVERNING BOARD.

Mayor Hernandez called the meeting to order at 3:00 p.m. Roll call established a quorum.

Comm. Pacheco **moved** to excuse absent member. Comm. Chavez seconded the motion and when put to a vote, it carried unanimously.

ITEM 2. PUBLIC TESTIMONY

There were no comments from the public.

REGULAR AGENDA - OPEN SESSION

ITEM 3. ORDINANCES AND RESOLUTIONS

A) CONSIDERATION AND ACTION, IF ANY, ON ORDINANCE CREATING OFFICE OF CITY CLERK DEPARTMENT. *(2ND READING)* THIS ITEM SUPPORTS SG - SOUND GOVERNANCE AND FISCAL SUSTAINABILITY. (ADMINISTRATION)

Jonathan Flores, City Manager, introduced the item and recommended approval.

Comm. Pacheco **moved** to approve. Comm. Chavez seconded the motion and when put to a vote, it carried unanimously.

B) CONSIDERATION AND ACTION, IF ANY, ON ORDINANCE CREATING THE FOOD SERVICES DEPARTMENT. *(2ND READING)* THIS ITEM SUPPORTS SG - SOUND GOVERNANCE AND FISCAL SUSTAINABILITY. (ADMINISTRATION)

Jonathan Flores, City Manager, introduced the item and recommended approval.

Comm. Chavez **moved** to approve. Comm. Flores seconded the motion and when put to a vote, it carried unanimously.

C) CONSIDERATION AND ACTION, IF ANY, ON ORDINANCE DIRECTING THE CITY MANAGER TO VACATE, ABANDON, AND CLOSE A 10 FT. BY 270.29 FT. ALLEY EASEMENT, CONSISTING OF 0.06 OF AN ACRE (2,702.90 SQUARE FEET) LOCATED ON LOT 14, BLOCK 160, L.R. BELL DEVELOPMENT "E", PHARR, HIDALGO COUNTY, TEXAS *(2ND READING)*. THIS ITEM SUPPORTS EV - ECONOMIC VITALITY. (DEVELOPMENT SERVICES)

Jonathan Flores, City Manager, introduced the item and recommended approval.

Comm. Chavez **moved** to approve. Comm. Flores seconded the motion and when put to a vote, it carried unanimously.

D) CONSIDERATION AND ACTION, IF ANY, ON ORDINANCE AMENDING ORDINANCE NO. O-2011-39 REGULATING THE DRILLING OF OIL, AND/OR GAS WELLS WITHIN THE CITY LIMITS OF THE CITY OF PHARR. *(1ST AND FINAL READING)* THIS ITEM SUPPORTS SG - SOUND GOVERNANCE AND FISCAL SUSTAINABILITY. (DEVELOPMENT SERVICES)

Jonathan Flores, City Manager, introduced the item and recommended approval.

Comm. Carrillo **moved** to approve. Comm. Flores seconded the motion and when put to a vote, it carried unanimously.

Ordinance No. O-2025-25 is filed with the City Clerk's Office.

At this time, Jonathan Flores, City Manager, deviated from the agenda and go to item 4.A. There was no objection.

ITEM 4. ADMINISTRATIVE

A) APPROVAL OF MINUTES FOR AUGUST 4, 2025 - REGULAR CALLED MEETING. THIS ITEM SUPPORTS SG - SOUND GOVERNANCE AND FISCAL SUSTAINABILITY. (ADMINISTRATION)

Jonathan Flores, City Manager, introduced the item and recommended approval.

Comm. Carrillo **moved** to approve minutes. Comm. Pacheco seconded the motion and when put to a vote, it carried unanimously.

At this time, Mayor Hernandez stated they would deviate from the agenda and go into closed session. There was no objection.

ITEM 5. CLOSED SESSION

The time being 3:03 p.m., Mayor Hernandez stated the commission would be entering into closed session in accordance with Chapter 551 of the Texas Govt. Code to discuss agenda items listed in the public portion of the agenda and Pursuant to Sections 551.071, 551.072, 551.074, 551.076, 551.084 and 551.087.

ITEM 6. RECONVENE

The time being 4:09 p.m., Mayor Hernandez stated the commission would be resuming the open meeting.

DRAFT

ITEM 3. ORDINANCES AND RESOLUTIONS

E) CONSIDERATION AND ACTION, IF ANY, ON RESOLUTION 2025 FOR THE COMMUNITY GREENING TRANSFORMATION GRANT FROM TEXAS A&M FOREST SERVICE. THIS ITEM SUPPORTS QL - QUALITY OF LIFE. (PARKS)

Jonathan Flores, City Manager, introduced the item.

Remy Vargas, Parks & Recreation Urban Ecologist, stated the City of Pharr had been awarded the 2025 Community Greening Transformation Grant from the Texas A&M Forest Service. He added this grant was to expand tree canopy growth and improve the quality of life for the residents and highlighted the importance of additional green space within the City of Pharr.

Elizabeth Diaz, Grants Management Director, stated the grant was in partnership with Texas A&M Forest Service and it would allow the expansion of parks. She further stated the grant award amount was $1.18 Million over a three-year expansion.

Carlos Garcia-Patlán, Texas A&M Forest Service Regional Community Ecologist, stated they were available as a resource for any assistance or training for the community and stated they were happy in partnering with the City of Pharr for these projects.

Comm. Carrillo **moved** to approve. Comm. Caballero seconded the motion and when put to a vote, it carried unanimously.

Resolution No. R-2025-39 is filed with the City Clerk's Office.

ITEM 7. ADJOURNMENT

There being no other business to come before the board, Comm. Carrillo **moved** to adjourn. Comm. Caballero seconded the motion and when put to a vote, the motion carried unanimously. Meeting adjourned at 5:51 p.m.

CITY OF PHARR

_____
AMBROSIO HERNANDEZ
MAYOR

STATE OF TEXAS
COUNTY OF HIDALGO
CITY OF PHARR

DRAFT

ON THIS THE 11th DAY OF AUGUST 2025 the Board of Commissioners of the City of Pharr, Texas convened in a **SPECIAL CALLED MEETING** at the Commissioner's Room located at 118 S. Cage, 2nd Floor, Pharr, Texas. The meeting being open to the public and notice of said meeting, giving the date, place, subject, hereof, having been posted in accordance with Chapter 551, Texas Government Code (Open Meetings Act) and there being present a quorum, I, **IMELDA PEREZ, CITY CLERK**, of the City of Pharr, Texas, certify that this is a true and correct copy of the minutes.

ATTEST:

_____
IMELDA PEREZ, CITY CLERK

APPROVED:

DRAFT

AGENDA MEMORANDUM

BOARD: BOARD OF COMMISSIONERS

AGENDA ITEM #: 5.B.
DATE SUBMITTED: August 12, 2025
MEETING DATE: August 18, 2025

FROM: Imelda Perez, City Clerk

DEPARTMENT: Administration

DIRECTOR: Jonathan Flores

Agenda Item: Consideration and action, if any, on Ordinance creating Office of City Clerk Department. ***(3rd and Final Reading)*** **This item supports SG - Sound Governance and Fiscal Sustainability.**

Classification: Regular
(* If closed session, City Attorney must review and approve.)

Issue: An Ordinance creating the City Clerk's Office as an official department of its own.

Fiscal Consideration: N / A

Staff Recommendation: Staff recommends approval

Alternatives: Not create department

Exclude Material from Public Packet? No
Reason: N / A

ROUTING:

Imelda Perez	Created/Initiated - 08/12/2025
Ricardo Rodriguez	Approved - 08/12/2025
Jamison Merrick	Approved - 08/14/2025
City Management Office	Final Approval - 08/14/2025

ORDINANCE NO: O-2025-

AN ORDINANCE ESTABLISHING AN OFFICE OF CITY CLERK DEPARTMENT; DEFINING DUTIES AND RESPONSIBILITIES; INCLUSION IN PHARR CODE OF ORDINANCES; ADOPTION OF RELATED LAWS; RATIFICATION OF PRIOR ACTS; REPEALING CONFLICTING ORDINANCES AND ESTABLISHING EFFECTIVE DATE

NOW, THEREFORE, BE IT ORDAINED BY THE BOARD OF COMMISSIONERS OF THE CITY OF PHARR, THAT:

SECTION 1: DEPARTMENT ESTABLISHED.

The Office of City Clerk shall be created pursuant to the City charter, municipal chain of authority and city employment policy. This Ordinance and provisions herewith shall be included in the Pharr Code of Ordinances. All acts occurring prior to the effective date of this Ordinance shall be ratified and adopted.

SECTION 2: AUTHORIZATION.

The Office of City Clerk shall be authorized to carry out any and all duties and responsibilities as directed by the City of Pharr and as permitted by applicable federal, state, and local laws.

SECTION 3: CREATION AND DUTIES OF OFFICE OF CITY CLERK.

(A) The Office of City Clerk is hereby created.

(B) The creation of the following positions is authorized:

1. One (1) City Clerk full-time exempt position and one (1) Assistant City Clerk full-time exempt position, both appointed by a majority vote of the Board of Commission; and
2. Additional positions may be authorized by the Board of Commissioners based on operational needs and budget availability.

(C) The department shall provide:

1. Administrative support to the Board of Commissioners, City Manager's Office, and all city departments consistent with state law and city policy.
2. Official record management of all municipal records.
3. Handle public information requests under all applicable laws.
4. Public meeting facilitation and documentation to accurately record the proceedings, preserve the minutes, ordinances, resolutions creating a public record of legislative actions.
4. Ensures compliance with all municipal, state, and federal laws and regulations governing vital statistics.

5. Election administration by overseeing the administration of municipal elections to ensure fairness, impartiality and compliance with all applicable laws.
6. Perform other duties and responsibilities as deemed appropriate and lawful for the efficient operation of city government.

SECTION 4: FISCAL RESPONSIBILITY

The department shall operate within approved budget allocations and shall maintain appropriate financial records and controls as required by city policy and applicable law.

SECTION 5: CUMULATIVE.

This Ordinance shall be cumulative of all other ordinances dealing with the same subject and other ordinances in direct conflict with this Ordinance is herewith repealed and this Ordinance shall supersede and provisions in conflict herewith; all other provisions of the above-described ordinance shall remain in full force and effect.

SECTION 6: SEVERABILITY CLAUSE.

All ordinances in conflict with this ordinance are repealed. The invalidity of any section, clause, sentence or provision of this ordinance shall not affect the validity of any other part thereof. The effects of this Ordinance shall at all times be in compliance with state, federal, and other guidelines as directed.

SECTION 7: EFFECTIVE DATE; PUBLICATION.

This Ordinance shall be read in three (3) separate readings and shall take effect on October 1, 2025, upon receiving final approval of not less than a majority of all the members of the Board of Commissioners and executed by the Mayor and City Clerk in accordance with City of Pharr Charter. This Ordinance may be published, after passage, in one issue of the official paper.

SECTION 8: **PROPER NOTICE AND MEETING.**

It is hereby officially found and determined that the meeting at which this Ordinance was passed was open to the public and that public notice of the time, place and purpose of said meeting was given as required by the Open Meetings Act, Chapter 551 of the Texas Government Code.

PASSED AND APPROVED ON THE FIRST READING BY THE BOARD OF CITY COMMISSIONERS OF THE CITY OF PHARR, TEXAS, on this the __ day of ____, 2025.

CITY OF PHARR

_____
AMBROSIO HERNANDEZ
MAYOR

ATTEST:

_____
IMELDA PEREZ, CITY CLERK

PASSED AND APPROVED ON THE SECOND READING BY THE BOARD OF CITY COMMISSIONERS OF THE CITY OF PHARR, TEXAS, on this the ___ day of ____, 2025.

CITY OF PHARR

_____
AMBROSIO HERNANDEZ
MAYOR

ATTEST:

_____
IMELDA PEREZ, CITY CLERK

PASSED AND APPROVED ON THE THIRD AND FINAL READING BY THE BOARD OF CITY COMMISSIONERS OF THE CITY OF PHARR, TEXAS, on this the __ day of ____, 2025.

CITY OF PHARR

_____
AMBROSIO HERNANDEZ
MAYOR

ATTEST:

_____
IMELDA PEREZ, CITY CLERK

AGENDA MEMORANDUM

BOARD: BOARD OF COMMISSIONERS

AGENDA ITEM #: 5.C.
DATE SUBMITTED: August 12, 2025
MEETING DATE: August 18, 2025

FROM: Imelda Perez, City Clerk

DEPARTMENT: Administration

DIRECTOR: Jonathan Flores

Agenda Item: Consideration and action, if any, on Ordinance creating the Food Services Department. ***(3rd and Final Reading)*** **This item supports SG - Sound Governance and Fiscal Sustainability.**

Classification: Regular
(* If closed session, City Attorney must review and approve.)

Issue: An Ordinance creating the Food Services Department as an official department of its own

Fiscal Consideration: N / A

Staff Recommendation: Staff recommends approval

Alternatives: Not create department

Exclude Material from Public Packet? No
Reason: N / A

ROUTING:

Imelda Perez	Created/Initiated - 08/12/2025
Ricardo Rodriguez	Approved - 08/12/2025
Jamison Merrick	Approved - 08/14/2025
City Management Office	Final Approval - 08/14/2025

ORDINANCE NO: O-2025-

AN ORDINANCE ESTABLISHING THE FOOD SERVICES DEPARTMENT; DEFINING DUTIES AND RESPONSIBILITIES; INCLUSION IN PHARR CODE OF ORDINANCES; ADOPTION OF RELATED LAWS; RATIFICATION OF PRIOR ACTS; REVEALING CONFLICTING ORDINANCES AND ESTABLISHING EFFECTIVE DATE

NOW, THEREFORE, BE IT ORDAINED BY THE BOARD OF COMMISSIONERS OF THE CITY OF PHARR, THAT:

SECTION 1: DEPARTMENT ESTABLISHED.

The Food Services Department shall be created pursuant to the City charter, municipal chain of authority and city employment policy. This Ordinance and provisions herewith shall be included in the Pharr Code of Ordinances. All acts occurring prior to the effective date of this Ordinance shall be ratified and adopted.

SECTION 2: AUTHORIZATION.

The Food Services Department is authorized to carry out all duties and responsibilities as directed by the City of Pharr and as permitted by applicable federal, state, and local laws, including but not limited to:

(A) Operating food service establishments in compliance with Texas Department of State Health Services regulations.

(B) Obtaining and maintaining all required permits, licenses, and certifications.

(C) Managing departmental personnel, budget, and operations; and

(D) Coordinating with other city departments as necessary.

SECTION 3: CREATION AND DUTIES OF FOOD SERVICES DEPARTMENT.

(A) The Food Services Department is hereby created.

(B) The creation of the following positions is authorized:

1. One (1) Food Services Director full-time exempt position; and
2. Additional positions may be authorized by the Board of Commissioners based on operational needs and budget availability.

(C) The department shall provide the following services:

1. Food services as a fast casual restaurant serving residents of the City of Pharr and visitors.
2. Catering and food service support to other city departments for official functions and events.

3. Food and beverage assistance to other city departments as requested and approved.
4. Such other related services as may be directed by the City Manager.

(D) The department shall operate in accordance with:

1. All applicable health and safety regulations.
2. City purchasing and procurement policies.
3. Generally accepted food service industry standards.
4. City financial management and accounting procedures.

SECTION 4: FISCAL RESPONSIBILITY

The department shall operate within approved budget allocations and shall maintain appropriate financial records and controls as required by city policy and applicable law.

SECTION 5: CUMULATIVE.

This Ordinance shall be cumulative of all other ordinances dealing with the same subject and other ordinances in direct conflict with this Ordinance is herewith repealed and this Ordinance shall supersede and provisions in conflict herewith; all other provisions of the above-described ordinance shall remain in full force and effect.

SECTION 6: SEVERABILITY CLAUSE.

All ordinances in conflict with this ordinance are repealed. The invalidity of any section, clause, sentence or provision of this ordinance shall not affect the validity of any other part thereof. The effects of this Ordinance shall at all times be in compliance with state, federal, and other guidelines as directed.

SECTION 7: EFFECTIVE DATE; PUBLICATION.

This Ordinance shall be read in three (3) separate readings and shall take effect on October 1, 2025, upon receiving final approval of not less than a majority of all the members of the Board of Commissioners and executed by the Mayor and City Clerk in accordance with City of Pharr Charter. This Ordinance may be published, after passage, in one issue of the official paper.

SECTION 8: **PROPER NOTICE AND MEETING.**

It is hereby officially found and determined that the meeting at which this Ordinance was passed was open to the public and that public notice of the time, place and purpose of said meeting was given as required by the Open Meetings Act, Chapter 551 of the Texas Government Code.

PASSED AND APPROVED ON THE FIRST READING BY THE BOARD OF CITY COMMISSIONERS OF THE CITY OF PHARR, TEXAS, on this the __ day of ____, 2025.

CITY OF PHARR

_____
AMBROSIO HERNANDEZ
MAYOR

ATTEST:

_____
IMELDA PEREZ, CITY CLERK

PASSED AND APPROVED ON THE SECOND READING BY THE BOARD OF CITY COMMISSIONERS OF THE CITY OF PHARR, TEXAS, on this the ___ day of ____, 2025.

CITY OF PHARR

_____
AMBROSIO HERNANDEZ
MAYOR

ATTEST:

_____
IMELDA PEREZ, CITY CLERK

PASSED AND APPROVED ON THE THIRD AND FINAL READING BY THE BOARD OF CITY COMMISSIONERS OF THE CITY OF PHARR, TEXAS, on this the __ day of ____, 2025.

CITY OF PHARR

_____
AMBROSIO HERNANDEZ
MAYOR

ATTEST:

_____
IMELDA PEREZ, CITY CLERK

AGENDA MEMORANDUM

BOARD: BOARD OF COMMISSIONERS

AGENDA ITEM #: 5.D.
DATE SUBMITTED: August 12, 2025
MEETING DATE: August 18, 2025

FROM: Kimberly Mendoza, Development Services Director

DEPARTMENT: Development Services

DIRECTOR: Kimberly Mendoza

Agenda Item: Consideration and action, if any, on Ordinance directing the City Manager to vacate, abandon, and close a 10 ft. by 270.29 ft. Alley Easement, consisting of 0.06 of an acre (2,702.90 square feet) located on Lot 14, Block 160, L.R. Bell Development "E", Pharr, Hidalgo County, Texas ***(3rd and Final Reading)***. **This item supports EV - Economic Vitality.**

Classification: Regular
(* If closed session, City Attorney must review and approve.)

Issue: Consideration and possible action on an ordinance directing the City Manager to vacate, abandon, and close a 10 ft. by 270.29 ft. alley easement running east and west along the north boundary of the property located on Lot 14, Block 160, L.R. Bell Development "E".

Fiscal Consideration: N / A

Staff Recommendation: Staff recommends approval subject to the conditions as noted.

Alternatives: N / A

Exclude Material from Public Packet? No
Reason: N / A

ROUTING:

Kimberly Mendoza	Created/Initiated - 08/12/2025
Ricardo Rodriguez	Approved - 08/12/2025
David Friedlein	Approved - 08/12/2025
City Management Office	Final Approval - 08/12/2025

ORDINANCE NO. O-2025-_____

AN ORDINANCE DIRECTING THE CITY MANAGER TO VACATE, ABANDON, AND, CLOSE A 10 FT. BY 270.29 FT. ALLEY EASEMENT, CONSISTING OF 0.06 OF AN ACRE (2,702.90 SQUARE FEET) LOCATED ON LOT 14, BLOCK 160, L.R. BELL DEVELOPMENT "E", PHARR, HIDALGO COUNTY, TEXAS; AND ESTABLISHING AN EFFECTIVE DATE.

WHEREAS, Chapter 311.007 of the Texas Transportation Code, authorizes home-rule cities to vacate, abandon, or close a street or alley; and

WHEREAS, Section 272.001(b)(2) of the Texas Local Government Code authorizes the conveyance of streets and alleys owned in fee or used by easement to abutting property owners; and

WHEREAS, the City of Pharr has received a request from the sole abutting property owner, Hector Gutierrez (the "Requestor") requesting that the City close, vacate, abandon and convey a 10 ft. by 270.29 ft. Alley Easement as more specifically described in Exhibit "A" and Exhibit "B" (the "Property"), which is attached hereto and incorporated herein for all purposes; and

WHEREAS, the respective utility companies and City departments have no objection to the abandonment as requested. However, Texas Gas Service is requesting that the 10 ft. Alley easement be converted to a 10 ft. public utility easement along the north side of the plat; and

WHEREAS, Waste Management is pending approval of the turning radius as part of the site plan; and

WHEREAS, Spectrum has no objection; however, they are requesting that the existing service lines located within the Alley easement to be abandoned be relocated at the owner's expense. If approved, the ordinance is to take effect once all conditions have been met; and

WHEREAS, the City, after vetting the request and confirming with the respective City departments, has determined that the Property is no longer needed for a public Right-of-Way or any other public purpose and that it is in the public interest to close, vacate, abandon and convey the Property to the Requestor.

NOW, THEREFORE, BE IT ORDAINED BY THE BOARD OF COMMISSIONERS OF THE CITY OF PHARR, TEXAS, THAT:

SECTION 1: That an Alley Easement being 10 ft. by 270.29 ft., consisting of 0.06 of an acre (2,702.90 square feet), located on the north side of Lot 14, Block 160, L.R. Bell Development "E", Pharr, Hidalgo County, Texas; more fully described in Exhibit "A" and "Exhibit B" is hereby vacated, and closed as a public Alley Easement, Right-of-Way, and abandoned as such.

SECTION 2: **SAVINGS CLAUSE.**

Except as hereby amended, any provisions of the Code of Ordinances or directives of the City of Pharr, Texas, not in conflict with this Ordinance shall remain in full force and effect, unimpaired hereby.

SECTION 3: SEVERABILITY CLAUSE.

The invalidity of any section, clause, sentence or provision of this Ordinance shall not affect the validity of any other part thereof. The effects of this Ordinance shall at all times be in compliance with state, federal, local and other guidelines as directed.

SECTION 4: PUBLICATION.

The City Clerk shall provide for the publication of this Ordinance in the Official newspaper in accordance with the City Charter.

SECTION 5: EFFECTIVE DATE. This Ordinance shall go into effect when passed and approved by the Board of Commissioners following three (3) separate readings.

READ, CONSIDERED, PASSED AND APPROVED at a regular meeting of the City Commission of the City of Pharr, Texas, at which a quorum was present and which was held in accordance with Vernon's Texas Codes Ann., Government Code, Section 551.041 on the __ day of _____, 2025.

PASSED AND APPROVED ON THE FIRST READING BY THE BOARD OF COMMISSIONERS OF THE CITY OF PHARR, TEXAS, on this the __ day of ____, 2025.

CITY OF PHARR

_____

AMBROSIO "AMOS" HERNANDEZ, MAYOR

ATTEST:

_____

IMELDA PEREZ, CITY CLERK

PASSED AND APPROVED ON THE SECOND READING BY THE BOARD OF COMMISSIONERS OF THE CITY OF PHARR, TEXAS, on this the __ day of ____, 2025.

CITY OF PHARR

_____

AMBROSIO "AMOS" HERNANDEZ, MAYOR

ATTEST:

_____

IMELDA PEREZ, CITY CLERK

PASSED AND APPROVED ON THE THIRD READING BY THE BOARD OF COMMISSIONERS OF THE CITY OF PHARR, TEXAS, on this the _____ day of _____, 2025.

CITY OF PHARR

_____

AMBROSIO “AMOS” HERNANDEZ, MAYOR

ATTEST:

_____

IMELDA PEREZ, CITY CLERK

Pharr Engineering

City of Pharr
Exhibit A

Location

Pharr City Limit

Scale:1:400

0 15 30 60 90 120 Feet

City of Pharr, Texas
Engineering Department
956.402.4242

Date:7/30/2025

EXHIBIT "B"

A 10.0 FOOT BY 270.29 FOOT ALLEY EASEMENT (0.06 AC.) OUT OF LOT 14, BLOCK 160, L.R. BELL DEVELOPMENT "E", HIDALGO COUNTY, TEXAS, ACCORDING TO PLAT RECORDED IN VOLUME 5, PAGE 57, MAP RECORDS, HIDALGO COUNTY, TEXAS; SAID ALLEY EASEMENT AS SHOWN ON PLAT OF BAGWELL ACRES SUBDIVISION LYING NORTH OF UN-NUMBERED 0.86 ACRE TRACT, ACCORDING TO PLAT RECORDED IN VOLUME 13, PAGE 54, MAP RECORDS, HIDALGO COUNTY, TEXAS.

BEGINNING at the northeast corner of Lot 8, Block 3, Bagwell Acres, for the southwest corner of the following described tract of land; said point located on the south line of 10 foot alley easement;

THENCE, North 08 Deg. 22 Min. 30 Sec. North, 10.0 feet, to a point for the northwest corner hereof; said point located on the South line of Lot 1, East Park Subdivision, recorded in Instrument Number 3129914, Map Records, Hidalgo County, Texas;

THENCE, with the South line of said Lot 1, and the North line of 10 foot alley easement, South 81 Deg. 31 Min. 30 Sec. East, 270.29 feet, to a point for the northeast corner hereof; said point located on the West line of North Veterans Boulevard;

THENCE, with the West line of North Veterans Boulevard, South 08 Deg. 22 Min. 30 Sec. West, 10.0 feet, to a point for the southeast corner hereof;

THENCE, with the south line of said 10 foot alley easement, North 81 Deg. 31 Min. 30 Sec. West, 270.29 feet, the POINT OF BEGINNING, containing 0.06 Acres of land, more or less.

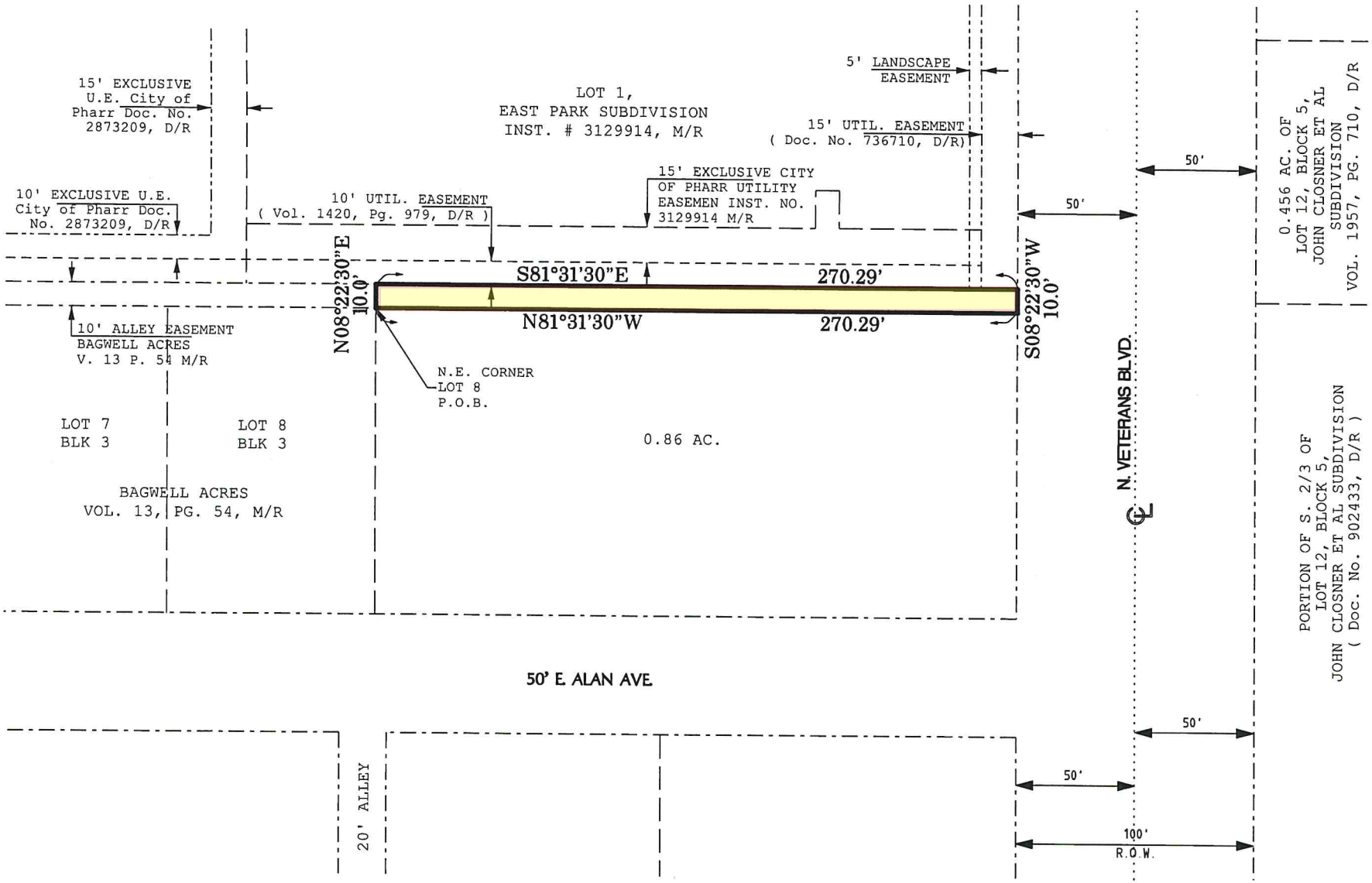

Prepared by:

Spoor Engineering Consultants, Inc.

Consulting Engineers - Civil Land Planning

FIRM # F-6003

202 South 4th. Street McAllen, Texas 78501

SEC@spooreng.com (956) 683 1000

Date: 01 MAY 2024
Scale: 1"= 60'

MAP OF

A 10.0 FOOT BY 270.29 FOOT ALLEY EASEMENT (0.06 AC.) OUT OF LOT 14, BLOCK 160, L.R. BELL DEVELOPMENT "E", HIDALGO COUNTY, TEXAS, ACCORDING TO PLAT RECORDED IN VOLUME 5, PAGE 57, MAP RECORDS, HIDALGO COUNTY, TEXAS; SAID ALLEY EASEMENT AS SHOWN ON PLAT OF BAGWELL ACRES SUBDIVSION LYING NORTH OF UN-NUMBERED 0.86 ACRE TRACT, ACCORDING TO PLAT RECORDED IN VOLUME 13, PAGE 54, MAP RECORDS, HIDALGO COUNTY, TEXAS

Texas Gas Service™
A Division of ONE Gas

5602 E. Grimes Road
Harlingen, Texas 78550
956-444-3900 • texasgasservice.com

January 30, 2025

Spoor Engineering Consultants, Inc.
510 S. Broadway St.
McAllen, TX, 78501

RE: No Conflict/Objection Letter – Conversion of 10-foot Alley
L.R. Bell Development "E" Subdivision, Lot 14
Pharr, Texas

To whom it may concern,

Texas Gas Service, a Division of ONE Gas, Inc., (TGS), has reviewed your request regarding the proposed conversion of the existing 10-foot alley to a 10-foot public utility easement located along the north property line of Lot 14, of the L.R. Bell Development "E" subdivision in Pharr, Tx. TGS has confirmed it has a 2-inch gas main located within the existing 10-foot alley. The proposed conversion of the 10-foot alley to a 10-foot utility easement presents no conflicts at this time and TGS does not object to the proposed conversion.

Please note that TGS's non-objection to the current proposed construction in no way or manner serves as a waiver of any existing or future rights afforded TGS pursuant to any existing easements or rights of way or any other express or implied rights in law or equity, including the laws and regulations established by any designated utility easement. This letter does not relieve the property owner from any existing or future legal requirements, including calling Texas 811 for utility locates prior to excavation.

Should you have any questions or require additional information, please feel free to contact me at (956) 444-3967 or rene.casares@onegas.com.

Thank you,

Rene C. Casares, PE
Texas Gas Service – Engineering Manager RGV

Attachments:
1. Texas Gas Service System Map
2. Customer Provided Survey & Documentation

04/25/25

REF: SEC

Approximate address: 1313 Alan Avenue – 1.02 Acres L.R. Bell Subdivision – Proposed Alan Acre

To whom it may concern:

Spectrum currently has service lines in the existing alley at this location. Spectrum will require the service lines to be relocated at the Customers expense prior to consenting to the abandonment of the existing alley. An invoice for the relocation has been submitted to the Customer. Please if you have any questions, I can be reached at(956)410-9047 office hour's 7am-4pm Mon.-Fri. And my e-mail address is Edward.A.Rodriguez@Charter.com. Thanks.

Sincerely,

Edward Rodriguez

Construction Coordinator

AGENDA MEMORANDUM

BOARD: BOARD OF COMMISSIONERS

AGENDA ITEM #: 5.E.
DATE SUBMITTED: August 12, 2025
MEETING DATE: August 18, 2025

FROM: Imelda Perez, City Clerk

DEPARTMENT: Administration

DIRECTOR: Imelda Perez

Agenda Item: Consideration and action, if any, on request from Hidalgo County Elections Department on use of Pharr Memorial Library and Pharr One for Election Day polling locations on Tuesday, November 4, 2025 and possible runoff election in December 2025. **This item supports SG - Sound Governance and Fiscal Sustainability.**

Classification: Consent
(* If closed session, City Attorney must review and approve.)

Issue: The Hidalgo County Elections Department is requesting the use of City facilities for the upcoming Election Day on Tuesday, November 4, 2025 and possible runoff election in December 2025.

* Polling hours are generally 7:00 a.m. to 7:00 p.m.

Fiscal Consideration: N/A

Staff Recommendation: Staff recommends approval for use of city facilities as polling locations.

Alternatives: N/A

Exclude Material from Public Packet? No
Reason: N/A

ROUTING:

Imelda Perez — Created/Initiated - 08/12/2025
City Management Office — Final Approval - 08/12/2025

From:	John Posz
To:	Imelda Perez
Cc:	Hilda Pedraza; Alessandra Garcia; Eberto Gauna; Iliana Bazan; Monserrat Ozuna; Laura Marquez; Cathy Guzman
Subject:	Request for Use of Facility as 2025 Polling Location - Election Day & Possible Runoff
Date:	Tuesday, August 12, 2025 11:30:16 AM
Attachments:	PHARR - Pharr Memorial Library - Polling Location Request Form.pdf PHARR - Pharr One - Polling Location Request Form.pdf

---

***** This is an email from an EXTERNAL source. DO NOT click links or open attachments without positive sender verification of purpose. Never enter USERNAME, PASSWORD or sensitive information on linked pages from this email. *****

Good morning,

Our office is requesting the use of the following facility or facilities as polling locations for **Election Day on November 4, 2025**, as well as for a possible runoff election in **December 2025**, if required.
The **Pharr Memorial Library** for **Election Day**.
The **Pharr ONE** for **Election Day**.

Polling hours are generally **7:00 a.m. to 7:00 p.m.** A final schedule will be provided as each election approaches; however, to meet statutory deadlines, we must secure and confirm all locations this month. At this time, we are submitting these requests with the expectation of final confirmation following Commissioners Court approval.

Should a different space within the building be available and **fully compliant with ADA requirements**, we are open to using that area to best serve voters. Our priority is to provide a consistent and fully accessible voting experience for the community — and your facility plays an important role in making that possible.

We would like to schedule **ADA compliance site visits** as soon as possible so that any necessary adjustments can be addressed well in advance.

For your convenience, the attached **2025 Polling Location Request Form** is now **fillable** — simply download it, complete the required fields, and return it at your earliest opportunity. If additional time is needed for internal approvals, a quick email confirmation will allow us to proceed with preparations while you finalize your review.

Note: This is a single request form covering all elections scheduled in 2025. If facility names or addresses have changed, please make corrections directly on the form.

Your cooperation ensures that voters in this area have equitable access to the ballot and that the County meets all state and federal election requirements. We sincerely appreciate your partnership in this important civic duty.
--
Thank you,
John Posz
Elections Surveyor I
Hidalgo County Elections Department
2015 W. Jackson Creek Ave. Edinburg, TX 78539
Office: 956-318-2570 Ext. 5738 Fax: 956-393-2039

AGENDA MEMORANDUM

BOARD: BOARD OF COMMISSIONERS

AGENDA ITEM #: 5.F.
DATE SUBMITTED: August 15, 2025
MEETING DATE: August 18, 2025

FROM: Alessandra Garcia, Assistant City Clerk

DEPARTMENT: Administration

DIRECTOR: Jonathan Flores

Agenda Item: Consideration and action, if any, on Interlocal Agreement Extension between City of Pharr and Hidalgo County Head Start Program for center located at 413 E. Clark (Pharr Head Start Center). **This item supports QL - Quality of Life.**

Classification: Consent
(* If closed session, City Attorney must review and approve.)

Issue: The City of Pharr has been collaborating with the Hidalgo County Head Start Program by providing the property at 413 E. Clark (Pharr Head Start Center), located in Pharr, to serve low-income children and families.

The beginning and ending dates of the extension are July 01, 2025, through June 30, 2027. The original Interlocal Agreement is extended for a period of two (2) years with all conditions, including the lease amount, remaining the same.

Fiscal Consideration: Rent in the amount of $24.00, payable in twenty-four (24) equal monthly payments of $1.00 each.

Staff Recommendation: Staff recommends approval.

Alternatives: Not to approve.

Exclude Material from Public Packet? No
Reason: N / A

ROUTING:

Alessandra Garcia	Created/Initiated - 08/15/2025
Ricardo Rodriguez	Approved - 08/15/2025
Jamison Merrick	Approved - 08/15/2025
City Management Office	Final Approval - 08/15/2025

FILED
AT 11:00 O'CLOCK A M
JUL 09 2025
ARTURO GUAJARDO, JR., COUNTY CLERK
HIDALGO COUNTY, TEXAS
BY DEPUTY

STATE OF TEXAS §
§
COUNTY OF HIDALGO §

INTERLOCAL AGREEMENT BETWEEN
THE CITY OF PHARR AND
HIDALGO COUNTY

This Lease is made and entered into by and between the **City of Pharr,** herein referred to as the "LESSOR" and **Hidalgo County** through the Head Start Program, herein referred to as the "LESSEE" in the Lease.

In consideration of the mutual covenants and agreements set forth in this Lease, and other good and valuable consideration, LESSOR demises and leases to LESSEE, and LESSEE leases from LESSOR, that certain described real property on which Head Start Building lies on and is situated at **413 E. Clark, Pharr, Texas** more particularly described on Exhibit "A", attached hereto. The premises leased hereunder consists of land only and are referred to in this Lease as "the Premises" known by lessee as "Pharr Head Start Center" or "the Leased Premises."

ARTICLE 1. TERMS AND RENT

1.01 The Leased Premises shall be used for the purpose of Head Start training and administrative office space subject to the special terms (if any) which may be listed below. The Leased Premises are deemed for the purposes of this Agreement to constitute all 100% percent of the land on which the Head Start building in which the Leased Premises are located.

1.02 Except as otherwise provided herein, the initial term of this lease shall be for twenty-four months (24) months commencing on **July 01, 2025** ("commencement date") and ending on **June 30, 2027** ("termination date") unless sooner terminated as provided in this Lease, or unless renewed and extended in accordance with Paragraph 1.03, hereof.

Renewal or Termination

1.03 Provided LESSEE has not defaulted in any of the terms conditions or provisions thereof, LESSEE shall be given the right of renewal to extend the term of the lease hereof, commencing on the first day of **July 2027**, for a term or terms as may be subsequently agreed upon by both parties.

Either LESSEE or LESSOR shall have the right to terminate the Lease Agreement with or without cause with sixty (60) days written notice to the other.

Base Rent

1.04 LESSEE agrees to pay LESSOR the maximum rent amount of $24.00 in twenty-four (24) equal monthly payments of $1.00 per month payable on the 1st day of each month. Payment shall be mailed to the City of Pharr, P.O. Box 13, Pharr, Texas 78577.

1.05 LESSOR covenants and agrees that LESSEE on paying the rent and other charges herein provided for and observing and keeping the covenants, conditions, and terms of this Lease on LESSEE'S part to be kept or performed, shall lawfully and quietly hold, occupy, and enjoy the Leased Premises during the term of this Lease without hindrance or disruption by LESSOR or any person

claiming under LESSOR except such portion of the Leased Premises, if any as shall be taken under the power of eminent domain.

LESSEE shall accept possession of Leased Premises and equipment (if any) in their present condition and location.

ARTICLE 2. TAXES

Taxes

2.01 LESSOR shall pay all real property taxes assessments until this Lease either expires or terminates as provided herein

2.02 LESSOR shall pay all personal property taxes and assessments on such Leased Premises as presently owned by LESSOR.

ARTICLE 3. MAINTENANCE ON PREMISES

3.01 LESSEE agrees to maintain the Leased Premises in condition suitable for use for which this lease is intended.

3.02 LESSEE will keep all and singular the Leased Premises, including all of LESSEE'S improvements, fixtures, appurtenances, equipment and machinery in such repair as the same at the commencement of the term. All repairs shall be at LESSEE'S expense and shall remain the property of the LESSEE at the termination of the lease. Reasonable use and wearing of said fixtures, appurtenances, equipment and machinery, damage thereto by accidental fire, accident, or natural disaster, shall be exempt from the provision.

3.03 LESSEE shall provide housekeeping services for said premises, limited to sweeping, mopping and emptying trash cans, at most, every two (2) working days, and waxing floors not more often than every two (2) weeks.

3.04 In the event that the Leased Premises are destroyed by flood or other casualty, the parties agree that this lease will be terminated and shall not be in force and effect during that period of time while the Leased Premises cannot be used for the purposes intended by Agreement.

3.05 It is agreed that all improvements made to or furnished by the LESSEE on the Leased Premises shall not become part of the realty and shall belong to LESSEE upon expiration of the Lease and may be removed upon termination of the Lease or any extension hereof; provided, further, that all removal of such chattels will not damage the land upon which they are situated.

3.06 LESSEE shall maintain the building situated on the land during this lease and will provide all major repairs at its own expense.

ARTICLE 4. UTILITIES

Utility Charge

4.01 LESSEE shall pay the charges for the water, sewer, garbage, trash pickup services, telephone, gas and electricity furnished to the Lease Premises during the term of this lease.

ARTICLE 5. INSURANCE AND INDEMNITY

Property Insurance

5.01 LESSEE shall insure the building and equipment covered by this lease against fire, accident, or natural disaster. In the event the building(s), or equipment or any part thereof shall, during said term or any renewal hereof, be destroyed by fire, accident, or natural disaster the same shall be thereby rendered unfit for use and habitation, then and in such case, the rent heretofore reserved, or a just and proportionate part thereof, according to the nature and

extent of the injury sustained, shall be suspended or abated until said Lease Premises shall have been put in proper condition for use and habitation, by LESSEE or this lease Agreement shall thereby be terminated and ended at the election of LESSEE or its legal representatives. LESSEE agrees to provide a copy to such policy of insurance to LESSOR at time of execution of this agreement.

5.02 To the extent allowable under law, LESSEE agrees to hold LESSOR harmless for any liability for any accident or other legal cause of action based upon any tort which occurs on the Lease Premises, caused solely by LESSEE, its agent or employees.

5.03 LESSEE agrees that during the term of this lease, it shall have in effect a liability insurance policy to protect LESSOR from any third party claims that may arise as a result of injuries caused to any person upon the premises herein described. The limits of this policy shall be not less than $100,000.00 per person and $300,000 per occurrence.

ARTICLE 6. MISCELLANEOUS

6.01 This agreement shall be binding upon and insure to the benefit of the parties hereto and their respective successors, but LESSEE shall not assign any part of the premises.

6.02 LESSEE will not cause to be conducted upon the premises any trade or business, which increases the rate of insurance premiums on the Leased Premises, building(s) or contents.

6.03 LESSEE will permit LESSOR at reasonable times to make such repairs as it may deem necessary for the protection of the premises.

6.04 This Agreement shall be construed under and in accordance with the laws of the State of Texas and all obligations of parties created hereunder are performable in Hidalgo County, Texas.

6.05 Commitment of Current Revenues Only. In the event that, during any term hereof, either party hereto does not appropriate sufficient funds to meet the obligations of such party under this Agreement, then such party may terminate this Agreement upon sixty (60) days written notice to the other party. Both parties agree, however to use their best efforts to secure funds necessary for the continued performance of this Agreement. The parties intend these provisions to be a continuing right to terminate this Agreement at the expiration of each budget period of the parties.

6.06 LESSEE shall permit LESSOR and its agents to enter into and upon the Leased Premises at approved specified times after written notice to LESSEE for the purpose of inspecting the same or for the purpose of maintaining or making repairs to the Leased Premises required hereby. However, the LESSOR agrees to not disrupt or interfere with the LESSEE's program.

WAVIER OF BREACH

A wavier by either LESSOR or LESSEE of a breach of this Lease by the other party shall not constitute a continuing wavier or waiver of any subsequent breach of the Lease.

ARTICLE 7. MISCELLANEOUS

Notices and Addresses

7.01 All notices required under this Lease will be deemed delivered when deposited in certified or registered mail, addressed to the proper party, at the following addresses:

LESSOR:	LESSEE:
City of Pharr Attn: Dr. Ambrosio Hernandez, Mayor P.O. Box 13 Pharr, Texas 78577	Hidalgo County Head Start Program Attn: Irma Peña, Executive Director P.O. Box 0117 Edinburg, TX 78540-0117

Either party may change the address to which notices are to be sent in by giving the other party notice of the new address in the manner provided in this section.

Legal Construction

In case any one or more of the provisions contained in this agreement shall for any reason be held by the court of competent jurisdiction to be invalid, illegal, or unenforceable in any respect, such invalidity, illegality, or unenforceability shall not affect any other provisions of the agreement, and this agreement shall be construed as if the invalid illegal, or unenforceable provision had never been included in the agreement.

Prior Agreement

This agreement constitutes the sole and only agreement of the parties to the agreement and supersedes any prior understandings or written or oral agreements between the parties respecting the subject matter of this agreement.

Amendment

No amendment, modification, or alteration of the terms of this agreement shall be binding unless it is in writing, dated subsequent to the date of this agreement, and duly executed by the parties to this agreement.

Rights and Remedies Cumulative

The rights and remedies provided by this lease agreement are cumulative, and the use of any one right or remedy by either party shall not preclude or waive that party's right to use any or all other remedies. The rights and remedies provided in this Lease are in addition to any other rights the parties may have by law, statute, ordinance or otherwise.

Attorney's Fees and Costs

If, as a result of a breach of this agreement by either party, the other party employs an attorney or attorneys to enforce its rights under this Lease, then the breaching or defaulting party agrees to pay the other party the reasonable attorney's fees and cost incurred to enforce the Lease. As awarded by a court of competent jurisdictions.

Force Majeure

Neither LESSOR nor LESSEE shall be required to perform any term, condition, or covenant in this Lease so long as such performance is delayed or prevented by force majeure, which shall mean acts of God, strikes, lockouts, material or labor restrictions by any governmental authority, civil riot, floods, and other cause not reasonably within the control of LESSOR or LESSEE and which

by the exercise of due diligence LESSOR or LESSEE is unable, wholly or in part, to prevent or overcome.

Estoppel Information

LESSEE shall, at the request of LESSOR, provide any and all information with respect to this Lease to any person designated by LESSOR.

Time of Essence

Time is of the essence of this agreement.

(Signature page follows)

THE UNDERSIGNED LESSOR and LESSEE execute this Lease on the day

10th of June 2025

LESSEE:

BY: _____ BY: _____

Richard Cortez, County Judge Irma Peña, Executive Director

LESSOR:

APPROVED BY
COMMISSIONERS COURT
ON: 6-10-2025 MM

BY: _____

Dr. Ambrosio Herandez, Mayor
City of Pharr

COMMISSIONERS COURT
HIDALGO COUNTY, TEXAS

ATTEST:

BY: _____

Arturo Guajardo, Jr.
Hidalgo County Clerk

APPROVED AS TO FORM:
Ricardo Gonzalez, P.C.
DBA, Oxford & Gonzalez

BY: _____

Ricardo Gonzalez

Interlocal Agreement - HC & the City of Pharr

AI-99648
Date Approved by Policy Council: 5-28-2025
Date Approved by County Commissioner: 6-10-2025

EXHIBIT "A"

Physical Address:

The City of Pharr is located at 413 Clark, Pharr, Texas and designated as Head Start training and administration office space.

Legal Description Being:

Property being described, lying in and being situated in a 0.39 of an Acre Tract being a portion of Lots #6, #7, and #8, Block 24, Pharr Original Town Site as recorded in Volume 3, page 33, recorded in the office of the County Clerk of Hidalgo County, Texas, to which map or plat reference is here made for more particularity of description.

AGENDA MEMORANDUM

BOARD: BOARD OF COMMISSIONERS

AGENDA ITEM #: 5.G.
DATE SUBMITTED: August 15, 2025
MEETING DATE: August 18, 2025

FROM: Alessandra Garcia, Assistant City Clerk

DEPARTMENT: Administration

DIRECTOR: Jonathan Flores

Agenda Item: Consideration and action, if any, on Interlocal Agreement Extension between City of Pharr and Hidalgo County Head Start Program for center located at 714 Zapata Street (Las Milpas I Head Start Center). **This item supports QL - Quality of Life.**

Classification: Consent
(* If closed session, City Attorney must review and approve.)

Issue: The City of Pharr has been collaborating with the Hidalgo County Head Start Program by providing property on 714 Zapata Street (Las Milpas I Head Start Center) located in Pharr to serve low-income children and families.

The beginning and ending dates are July 1, 2025, through June 30, 2027. The original Interlocal Agreement is extended for a period of two (2) years with all conditions, including the lease amount, remaining the same.

Fiscal Consideration: Rent in the amount of $24.00, payable in twenty-four (24) equal monthly payments of $1.00 each.

Staff Recommendation: Staff recommends approval.

Alternatives: Not to approve.

Exclude Material from Public Packet? No
Reason: N / A

ROUTING:

Alessandra Garcia	Created/Initiated - 08/15/2025
Ricardo Rodriguez	Approved - 08/15/2025
Jamison Merrick	Approved - 08/15/2025
City Management Office	Final Approval - 08/15/2025

FILED
AT 11:00 O'CLOCK A. M
JUL 09 2025
ARTURO GUAJARDO, JR., COUNTY CLERK
HIDALGO COUNTY, TEXAS
BY DEPUTY

STATE OF TEXAS §
§
COUNTY OF HIDALGO §

INTERLOCAL AGREEMENT BETWEEN
THE CITY OF PHARR AND
HIDALGO COUNTY

This Lease is made and entered into by and between the **City of Pharr,** herein referred to as the "LESSOR" and **Hidalgo County** through the Head Start Program, herein referred to as the "LESSEE" in the Lease.

In consideration of the mutual covenants and agreements set forth in this Lease, and other good and valuable consideration, LESSOR demises and leases to LESSEE, and LESSEE leases from LESSOR, that certain described real property on which Head Start Building lies on and is situated at **714 Zapata Street, Pharr, Texas** more particularly described on Exhibit "A", attached hereto. The premises leased hereunder consists of land only and are referred to in this Lease as "the Premises" known by lessee as "Las Milpas I Head Start Center" or "the Leased Premises."

ARTICLE 1. TERMS AND RENT

1.01 The Leased Premises shall be used for the purpose of Head Start training and administrative office space subject to the special terms (if any) which may be listed below. The Leased Premises are deemed for the purposes of this Agreement to constitute all 100% percent of the land on which the Head Start building in which the Leased Premises are located.

1.02 Except as otherwise provided herein, the initial term of this lease shall be for twenty-four months (24) months commencing on **July 01, 2025** ("commencement date") and ending on **June 30, 2027** ("termination date") unless sooner terminated as provided in this Lease, or unless renewed and extended in accordance with Paragraph 1.03, hereof.

Renewal or Termination

1.03 Provided LESSEE has not defaulted in any of the terms conditions or provisions thereof, LESSEE shall be given the right of renewal to extend the term of the lease hereof, commencing on the first day of **July 2027**, for a term or terms as may be subsequently agreed upon by both parties.

Either LESSEE or LESSOR shall have the right to terminate the Lease Agreement with or without cause with sixty (60) days written notice to the other.

Base Rent

1.04 LESSEE agrees to pay LESSOR the maximum rent amount of $24.00 in twenty-four (24) equal monthly payments of $1.00 per month payable on the 1st day of each month. Payment shall be mailed to the City of Pharr, P.O. Box 13, Pharr, Texas 78577.

1.05 LESSOR covenants and agrees that LESSEE on paying the rent and other charges herein provided for and observing and keeping the covenants, conditions, and terms of this Lease on LESSEE'S part to be kept or performed, shall lawfully and quietly hold, occupy, and enjoy the Leased Premises during the term of this Lease without hindrance or disruption by LESSOR or any person

claiming under LESSOR except such portion of the Leased Premises, if any as shall be taken under the power of eminent domain.

LESSEE shall accept possession of Leased Premises and equipment (if any) in their present condition and location.

ARTICLE 2. TAXES

Taxes

2.01 LESSOR shall pay all real property taxes assessments until this Lease either expires or terminates as provided herein

2.02 LESSOR shall pay all personal property taxes and assessments on such Leased Premises as presently owned by LESSOR.

ARTICLE 3. MAINTENANCE ON PREMISES

3.01 LESSEE agrees to maintain the Leased Premises in condition suitable for use for which this lease is intended.

3.02 LESSEE will keep all and singular the Leased Premises, including all of LESSEE'S improvements, fixtures, appurtenances, equipment and machinery in such repair as the same at the commencement of the term. All repairs shall be at LESSEE'S expense and shall remain the property of the LESSEE at the termination of the lease. Reasonable use and wearing of said fixtures, appurtenances, equipment and machinery, damage thereto by accidental fire, accident, or natural disaster, shall be exempt from the provision.

3.03 LESSEE shall provide housekeeping services for said premises, limited to sweeping, mopping and emptying trash cans, at most, every two (2) working days, and waxing floors not more often than every two (2) weeks.

3.04 In the event that the Leased Premises are destroyed by flood or other casualty, the parties agree that this lease will be terminated and shall not be in force and effect during that period of time while the Leased Premises cannot be used for the purposes intended by Agreement.

3.05 It is agreed that all improvements made to or furnished by the LESSEE on the Leased Premises shall not become part of the realty and shall belong to LESSEE upon expiration of the Lease and may be removed upon termination of the Lease or any extension hereof; provided, further, that all removal of such chattels will not damage the land upon which they situated.

3.06 LESSEE shall maintain the building situated on the land during this lease and will provide all major repairs at its own expense.

ARTICLE 4. UTILITIES

Utility Charge

4.01 LESSEE shall pay the charges for the water, sewer, garbage, trash pickup services, telephone, gas and electricity furnished to the Lease Premises during the term of this lease.

ARTICLE 5. INSURANCE AND INDEMNITY

Property Insurance

5.01 LESSEE shall insure the building and equipment covered by this lease against fire, accident, or natural disaster. In the event the building(s), or equipment or any part thereof shall, during said term or any renewal hereof, be destroyed by fire, accident, or natural disaster the same shall be thereby rendered unfit for use and habitation, then and in such case, the rent heretofore reserved, or a just and proportionate part thereof, according to the nature and

extent of the injury sustained, shall be suspended or abated until said Lease Premises shall have been put in proper condition for use and habitation, by LESSEE or this lease Agreement shall thereby be terminated and ended at the election of LESSEE or its legal representatives. LESSEE agrees to provide a copy to such policy of insurance to LESSOR at time of execution of this agreement.

5.02 To the extent allowable under law, LESSEE agrees to hold LESSOR harmless for any liability for any accident or other legal cause of action based upon any tort which occurs on the Lease Premises, caused solely by LESSEE, its agent or employees.

5.03 LESSEE agrees that during the term of this lease, it shall have in effect a liability insurance policy to protect LESSOR from any third party claims that may arise as a result of injuries caused to any person upon the premises herein described. The limits of this policy shall be not less than $100,000.00 per person and $300,000 per occurrence.

ARTICLE 6. MISCELLANEOUS

6.01 This agreement shall be binding upon and insure to the benefit of the parties hereto and their respective successors, but LESSEE shall not assign any part of the premises.

6.02 LESSEE will not cause to be conducted upon the premises any trade or business, which increases the rate of insurance premiums on the Leased Premises, building(s) or contents.

6.03 LESSEE will permit LESSOR at reasonable times to make such repairs as it may deem necessary for the protection of the premises.

6.04 This Agreement shall be construed under and in accordance with the laws of the State of Texas and all obligations of parties created hereunder are performable in Hidalgo County, Texas.

6.05 Commitment of Current Revenues Only. In the event that, during any term hereof, either party hereto does not appropriate sufficient funds to meet the obligations of such party under this Agreement, then such party may terminate this Agreement upon sixty (60) days written notice to the other party. Both parties agree, however to use their best efforts to secure funds necessary for the continued performance of this Agreement. The parties intend these provisions to be a continuing right to terminate this Agreement at the expiration of each budget period of the parties.

6.06 LESSEE shall permit LESSOR and its agents to enter into and upon the Leased Premises at approved specified times after written notice to LESSEE for the purpose of inspecting the same or for the purpose of maintaining or making repairs to the Leased Premises required hereby. However, the LESSOR agrees to not disrupt or interfere with the LESSEE's program.

WAVIER OF BREACH

A wavier by either LESSOR or LESSEE of a breach of this Lease by the other party shall not constitute a continuing wavier or waiver of any subsequent breach of the Lease.

ARTICLE 7. MISCELLANEOUS

Notices and Addresses

7.01 All notices required under this Lease will be deemed delivered when deposited in certified or registered mail, addressed to the proper party, at the following addresses:

LESSOR:	LESSEE:
City of Pharr Attn: Dr. Ambrosio Hernandez, Mayor P.O. Box 13 Pharr, Texas 78577	Hidalgo County Head Start Program Attn: Irma Peña, Executive Director P.O. Box 0117 Edinburg, TX 78540-0117

Either party may change the address to which notices are to be sent in by giving the other party notice of the new address in the manner provided in this section.

Legal Construction

In case any one or more of the provisions contained in this agreement shall for any reason be held by the court of competent jurisdiction to be invalid, illegal, or unenforceable in any respect, such invalidity, illegality, or unenforceability shall not affect any other provisions of the agreement, and this agreement shall be construed as if the invalid illegal, or unenforceable provision had never been included in the agreement.

Prior Agreement

This agreement constitutes the sole and only agreement of the parties to the agreement and supersedes any prior understanding or written or oral agreements between the parties respecting the subject matter of this agreement.

Amendment

No amendment, modification, or alteration of the terms of this agreement shall be binding unless it is in writing, dated subsequent to the date of this agreement, and duly executed by the parties to this agreement.

Rights and Remedies Cumulative

The rights and remedies provided by this lease agreement are cumulative, and the use of any one right or remedy by either party shall not preclude or waive that party's right to use any or all other remedies. The rights and remedies provided in this Lease are in addition to any other rights the parties may have by law, statute, ordinance or otherwise.

Attorney's Fees and Costs

If, as a result of a breach of this agreement by either party, the other party employs an attorney or attorneys to enforce its rights under this Lease, then the breaching or defaulting party agrees to pay the other party the reasonable attorney's fees and cost incurred to enforce the Lease. As awarded by a court of competent jurisdictions.

Force Majeure

Neither LESSOR nor LESSEE shall be required to perform any term, condition, or covenant in this Lease so long as such performance is delayed or prevented by force majeure, which shall mean acts of God, strikes, lockouts, material or labor restrictions by any governmental authority, civil riot, floods, and other cause not reasonably within the control of LESSOR or LESSEE and which

by the exercise of due diligence LESSOR or LESSEE is unable, wholly or in part, to prevent or overcome.

Estoppel Information

LESSEE shall, at the request of LESSOR, provide all information with respect to this Lease to any person designated by LESSOR.

Time of Essence

Time is of the essence of this agreement.

(Signature page follows)

THE UNDERSIGNED LESSOR and LESSEE execute this Lease on the day

10th of June 2025

LESSEE:

BY: _____
Ricardo Cortez, County Judge

BY: _____
Irma Peña, Executive Director

LESSOR:

APPROVED BY
COMMISSIONERS COURT
ON: 6-10-2025 MM

BY: _____
Dr. Ambrosio Hernandez, Mayor
City of Pharr

ATTEST:

BY: _____
Arturo Guajardo, Jr.
Hidalgo County Clerk

COMMISSIONERS COURT
HIDALGO COUNTY, TEXAS

APPROVED AS TO FORM:
Ricardo Gonzalez, P.C.
DBA. Oxford & Gonzalez

BY: _____
Ricardo Gonzalez

AI-99648
Date Approved by Policy Council: 5-28-2025
Date Approved by County Commissioner: 6-10-2025

EXHIBIT "A"

Physical Address:

The City of Pharr is located at 714 Zapata Street, Pharr, Texas and designated as Head Start training and administration office space.

Legal Description Being:

Property being described, lying in and being situated in Lot #77, Colonial Estrella Subdivision, Las Milpas, Hidalgo County, Texas, recorded in the office of the County Clerk of Hidalgo County, Texas, to which map or plat reference is here made for more particularity of description.

AGENDA MEMORANDUM

BOARD: BOARD OF COMMISSIONERS

AGENDA ITEM #: 5.H.
DATE SUBMITTED: August 12, 2025
MEETING DATE: August 18, 2025

FROM: Alessandra Garcia, Assistant City Clerk

DEPARTMENT: Administration

DIRECTOR:

Agenda Item: Consideration and action, if any, on Development Services Cases:

Classification: Public Hearing
(* If closed session, City Attorney must review and approve.)

Issue:

Fiscal Consideration:

Staff Recommendation:

Alternatives:

Exclude Material from Public Packet? No
Reason:

ROUTING:

Alessandra Garcia Created/Initiated - 08/12/2025

AGENDA MEMORANDUM

BOARD: BOARD OF COMMISSIONERS

AGENDA ITEM #: 5.H.1.
DATE SUBMITTED: August 12, 2025
MEETING DATE: August 18, 2025

FROM: Kimberly Mendoza, Development Services Director

DEPARTMENT: Development Services

DIRECTOR: Kimberly Mendoza

Agenda Item: Martin Talavera, DBA Katosabi Sushi Bar, has filed with the Planning and Zoning Commission a request for a Conditional Use Permit and Late Hours Permit to allow the sale of alcoholic beverages for on-premise consumption. The property is legally described as being 0.070 acres, more or less, out of Lot A, Medical Ridge Subdivision, Pharr, Hidalgo County, Texas. The property is physically located at 1401 South Jackson Road, Suites 7 & 8. CUP#250708 **This item supports EV - Economic Vitality.**

Classification: Public Hearing
(* If closed session, City Attorney must review and approve.)

Issue: Martin Talavera, DBA Katosabi Sushi Bar, has filed with the Planning and Zoning Commission a request for a Conditional Use Permit and Late Hours Permit to allow the sale of alcoholic beverages for on-premise consumption in a General Business District (C).

Fiscal Consideration: N/A

Staff Recommendation: Development Services recommends approval of the Conditional Use Permit and Late Hours Permit to allow the sale of alcoholic beverages for on-premise consumption in General Business District (C) subject to the applicant and site being in compliance with all City Ordinances and City Department requirements.

Planning and Zoning Commission Recommendation: At the Planning and Zoning Commission meeting of August 11, 2025, the Board voted unanimously to recommend approval of the request for a Conditional Use Permit and to allow the sale of alcoholic beverages for on-premise consumption in a General Business District (C) subject to the applicant and site being in compliance with all City Ordinances and City Department requirements. There were six members present and voting.

Alternatives: N/A

Exclude Material from Public Packet? No
Reason: N/A

ROUTING:

Kimberly Mendoza	Created/Initiated - 08/12/2025
Ricardo Rodriguez	Approved - 08/12/2025
David Friedlein	Approved - 08/12/2025
City Management Office	Final Approval - 08/12/2025

Pharr
Development Services

MEMORANDUM

DATE: **MONDAY, AUGUST 18, 2025**

TO: **MAYOR AND CITY COMMISSION**

FROM: **JONATHAN B. FLORES, CITY MANAGER**

SUBJECT: CONDITIONAL USE PERMIT FOR ABC
FILE NO. **CUP#250708** (Katosabi Sushi Bar)

GENERAL INFORMATION:

APPLICANT: Martin Talavera, DBA Katosabi Sushi Bar, has filed with the Planning and Zoning Commission a request for a Conditional Use Permit and Late Hours Permit to allow the sale of alcoholic beverages for on-premise consumption in a General Business District (C).

LEGAL DESCRIPTION: The property is legally described as being 0.070 acres, more or less, out of Lot A, Medical Ridge Subdivision, Pharr, Hidalgo County, Texas.

LOCATION: The property is physically located at 1401 South Jackson Road, Suites 7 & 8.

ZONING: The property and properties to the north and south are currently zoned General Business District (C). The adjacent zoning is Residential Multi-Family High Density District (R-MFHD) to the east. The city limits lie to the west. The area is generally designated for commercial in the Land Use Plan.

COMMENTS:

POLICE CHIEF: Recommends approval of the Conditional Use Permit.

FIRE DEPARTMENT: Recommends approval of the Conditional Use Permit.

CODE COMPLIANCE:	Recommends approval of the Conditional Use Permit.
HEALTH:	Recommends approval of the Conditional Use Permit.
DEVELOPMENT SERVICES:	Recommends approval of the Conditional Use Permit.

NOTIFICATION OF PUBLIC: Thirteen (13) surrounding property owners were notified of the request by letter on July 25, 2025, and a legal notice was published in the Advance News Journal on July 23, 2025. Staff received one call for information only.

DEVELOPMENT SERVICES RECOMMENDATIONS: Development Services recommended **approval** of the Conditional Use Permit and Late Hours Permit to allow the sale of alcoholic beverages for on-premise consumption in General Business District (C) subject to the applicant and site being in compliance with all City Ordinances and City Department requirements.

PLANNING & ZONING COMMISSION: At the Planning and Zoning Commission meeting of August 11, 2025, the Board voted unanimously to recommend approval of the request for a Conditional Use Permit and to allow the sale of alcoholic beverages for on-premise consumption in a General Business District (C) subject to the applicant and site being in compliance with all City Ordinances and City Department requirements. There were six members present and voting.

Conditions of Conditional Uses Sec. 1.48(F) of the Zoning Ordinance: Establishments selling or distributing alcoholic beverages for consumption on premises:

1. An establishment that sells or allows the on-premises consumption of alcoholic beverages in the City of Pharr shall operate in a "C" zone, general business district; "C-2" zone, business district; "HC" zone, heavy commercial; "LI" zone, limited industrial; "HI" zone, heavy industrial; or in recreational facilities located within a private development.

2. In addition to the restricted locations as stated above, the above-mentioned establishments may be allowed to sell or allow the on-premises consumption of alcoholic beverages within 300 feet of a church, public or private school, or public hospital.

3. The establishment shall notify the church, public or private school, or public hospital, and the City of Pharr's Planning and Zoning department in written form of their interest in selling or consuming alcoholic beverages within 300 feet of such locations. If the church or school objects to the request, the City of Pharr's authorized designee may deny the request.

4. The measurement of the distance between the place of business where alcoholic beverages are sold and the church or public hospital shall be along the property lines of the street fronts and from front door to front door, and in direct line across intersections. The measurement of the distance between the place of business where alcoholic beverages are sold and the public or private school shall be:

    A. In a direct line from the property line of the public or private school to the property line of the place of business, and in a direct line across intersections; or
    B. If the permit or license holder is located on or above the fifth story of a multistory building, in a direct line from the property line of the public or private school to the property line of the place of business, in a direct line across intersections, and vertically up the building at the property line to the base of the floor on which the permit or license holder is located.

5. For premises where minors are prohibited from entering the premises under V.T.C.A., Alcoholic Beverage Code § 109.53, the measurement of the distance between the premises and a public school shall be:

    A. In a direct line from the property line of the public or private school to the property line of the place of business, and in a direct line across intersections; or
    B. If the permit or license holder is located on or above the fifth story of a multistory building, in a direct line from the property line of the public or private school to the property line of the place of business, in a direct line across intersections, and vertically up the building at the property line to the base of the floor on which the permit or license holder is located.

6. In accordance with V.T.C.A., Alcoholic Beverage Code § 109.32, the above mentioned establishment businesses shall be not less than 300 feet from the nearest residential zone, unless located within a private development, or publicly owned building shall be along the property lines of the street fronts and from front door to front door, and in direct line across intersections, measured in a straight line or must provide sufficient buffering and sound insulation of the building such that the business is not visible and cannot be heard from such residential zone or publicly owned building and must be designed to prevent disruption of the character of adjacent residential areas. As applies to this provision, a street or alley does not constitute buffering and sound insulation.

The above-mentioned businesses, unless located within a private development, must be adjacent to or abutting a minor arterial street or a street of larger classification.

7. The above-mentioned establishment must meet lot size requirements in the zoning ordinance for all uses within this zone.

8. The above-mentioned establishment must provide parking sufficient to comply with all ordinance requirements.

9. The above-mentioned establishment shall restrict the number of persons within the building to those allowed by the city commission with the recommendation of the planning and zoning commission at the time of permit issuance, which number shall be determined by the commission after having taken into account the recommendations of the fire marshal, code enforcement officer [head building inspector], and director of planning. This number cannot exceed the number provided for in existing city ordinances.

10. The above-mentioned establishment shall take action to prevent and be designed to discourage criminal activities and vandalism both on site and on adjacent property by means of sufficient lighting, elimination of dark areas, and the orientation of the building such that it provides maximum visibility from a public street, unless located within a private development.

11. The above-mentioned businesses must make provisions to keep litter from being spread to adjacent streets and property.

12. Alcoholic beverage establishments shall fall into two categories: (A) Alcohol as a principle use where 51 percent or more of sales come from alcohol; or (B) Food as a principle use where 51 percent or more of sales are food related (a copy of the establishment's full menu must be provided for documentation).

13. The city reserves the right to approve, amend or deny any city regulation that may be allowed by the Texas Alcoholic and Beverage Code as may be amended from time to time. The City of Pharr shall also be authorized to carry out any and all duties and responsibilities as directed by the City of Pharr and as may be allowed by law. Should any person or establishment be found to have committed acts or allowed the commission of any act or condition found by the City of Pharr to be detrimental to the public health, safety, and welfare of the residents of the City of Pharr or persons located within corporate boundaries, the City of Pharr shall be authorized to take any action allowed by ordinance, state or federal law, or other regulation. These actions may include but not limited to quarantine, abatement of premises, closure, condemning, removal of dangerous substances and persons, and other preventive measures and actions.

Proposed Conditional Use Permit
1401 S JACKSON RD

KATOSABI SUSHI BAR/ MARTIN TALAVERA

AERIAL

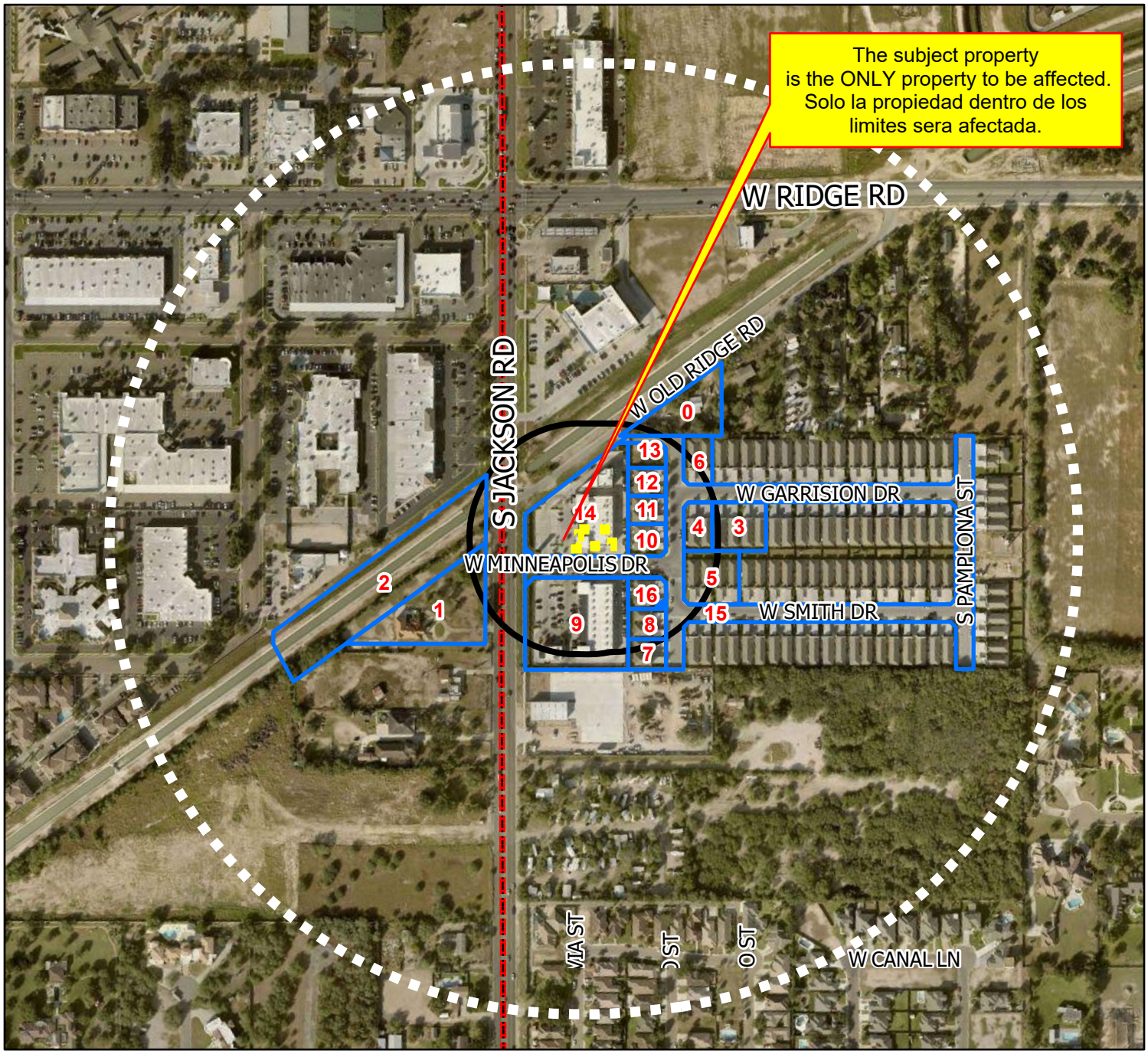

G:\City of Pharr\GIS\Projects\1-Planning\PRO Conditional Use Permits\CUP 250708-1\aprx\00_BASE Project File.aprx

- Pharr City Limit
- 300 ft. Notification Buffer
- Notified Properties
- Location

All information displayed on this map is subject to verification by field survey or by the agency responsible for maintaining the information. This map is intended for general information only.

Date: 7/23/2025
City of Pharr, Texas
Engineering Department

Scale: 1:5,000

Proposed Conditional Use Permit
1401 S JACKSON RD

RADIUS

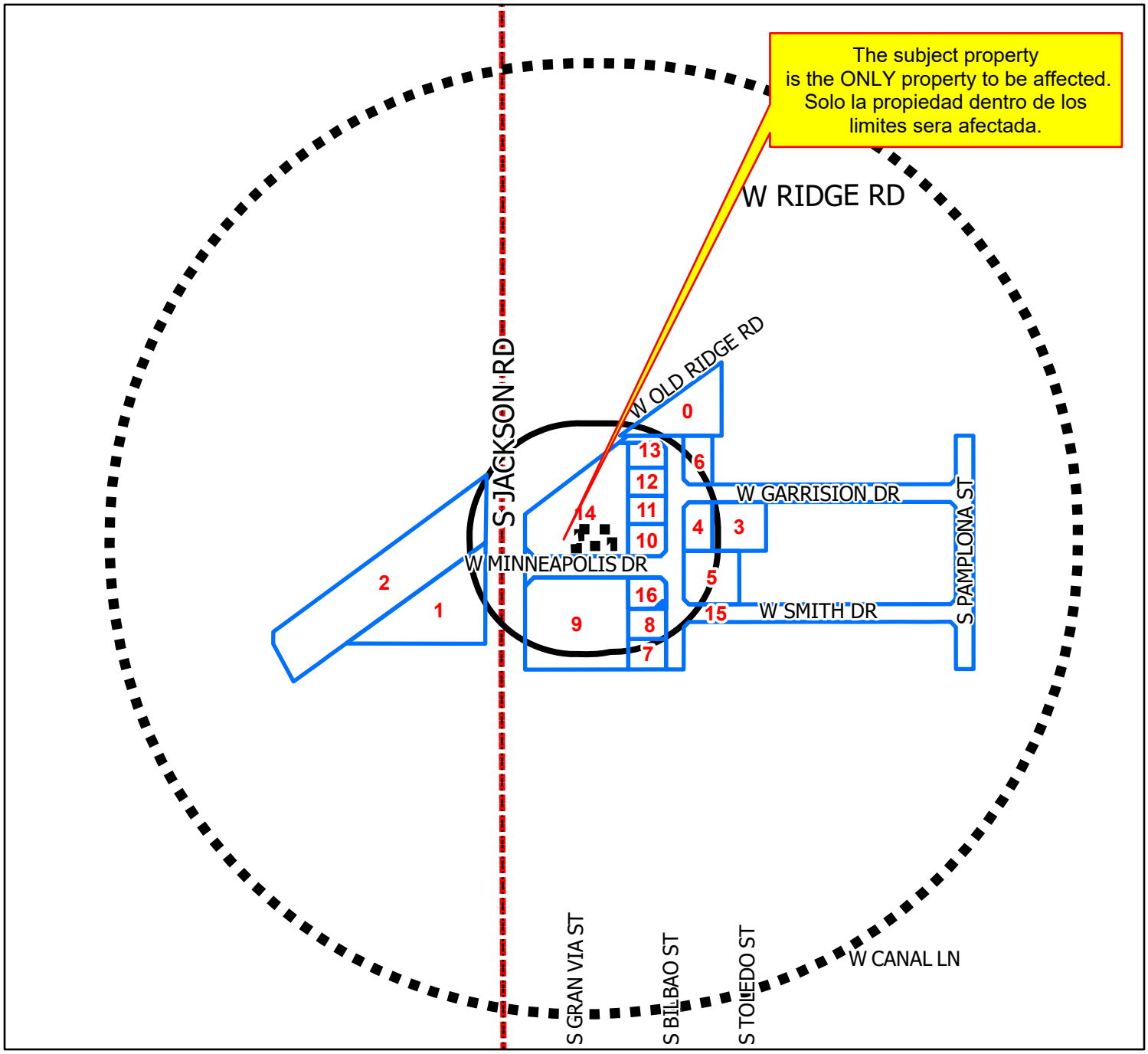

Pharr City Limit

300 ft. Notification Buffer

Notified Properties

Location

All information displayed on this map is subject to verification by field survey or by the agency responsible for maintaining the information. This map is intended for general information only.

City of Pharr, Texas
Engineering Department
956.402.4221

Date: 7/23/2025

Scale: 1:5,000

0 210 420 840 1,260 1,680 Feet

G:\City of Pharr\GIS\Projects\1-Planning\PRO Conditional Use Permits\CUP 250708-\aprx\00_BASE Project File.aprx

Proposed Conditional Use Permit
1401 S JACKSON RD

ZONING

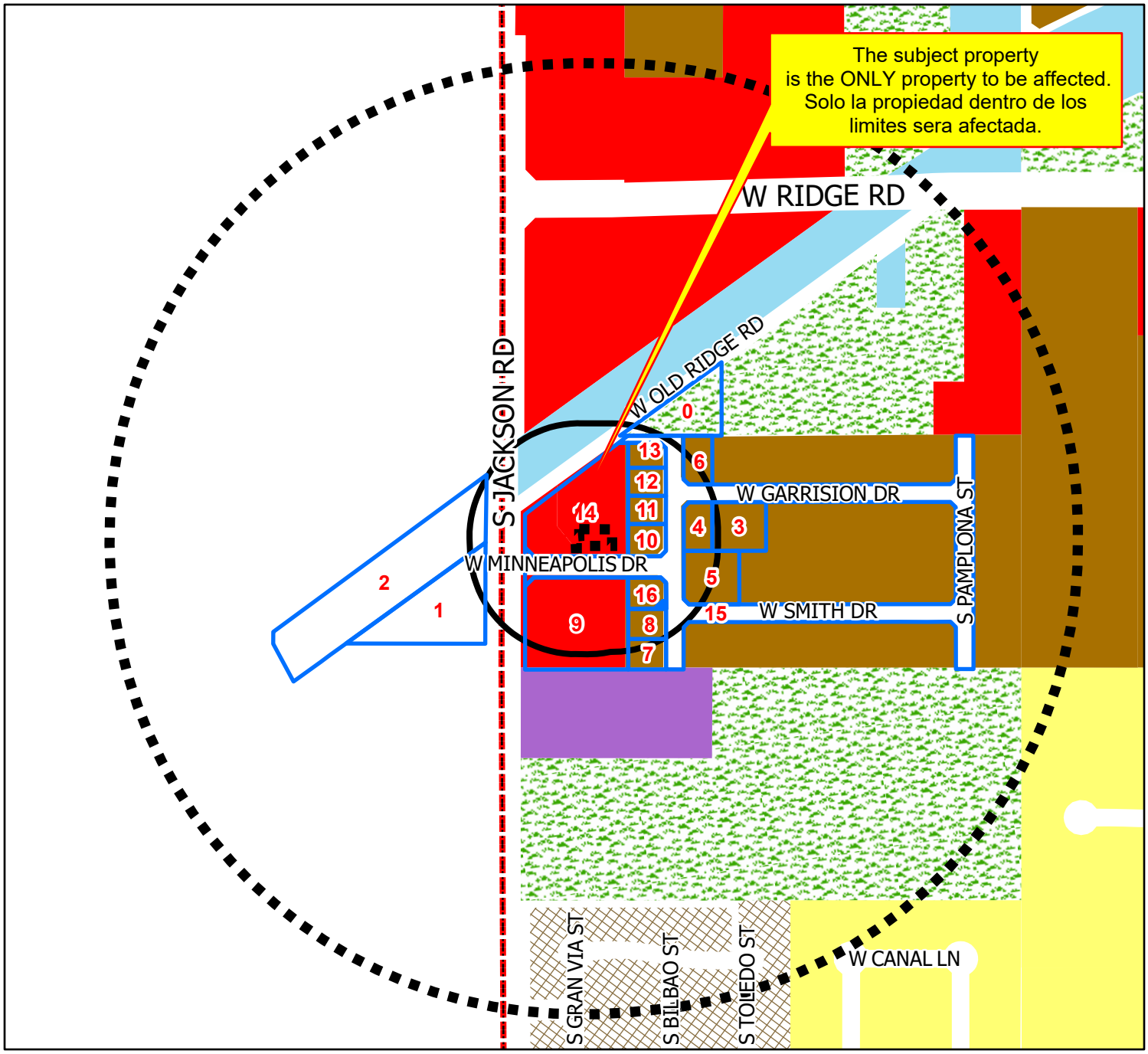

G:\City of Pharr\GIS\Projects\1-Planning\PRO Conditional Use Permits\CUP 250708-\aprx\00_BASE Project File.aprx

- Pharr City Limit
- 300 ft. Notification Buffer
- Notified Properties
- Location
- Agricultural Open Space
- Single Family
- Single Family Small Lot
- Residential Multi-Family
- Residential Multi-Family High Density
- Mobile Home
- Townhouse
- HUD Code
- Rail Road R.O.W
- Government Owned
- General Business
- Business District
- Drainage Easement
- Heavy Commercial
- Heavy Industrial
- Limited Industrial
- Neighborhood Commercial
- Office Professional
- PSJA ISD
- Hidalgo ISD
- Valley View ISD
- Planned Unit Development

All information displayed on this map is subject to verification by field survey or by the agency responsible for maintaining the information. This map is intended for general information only.

City of Pharr, Texas
Engineering Department
956.402.4221

Scale: 1:5,000

0 210 420 840 1,260 1,680 Feet

Date: 7/23/2025

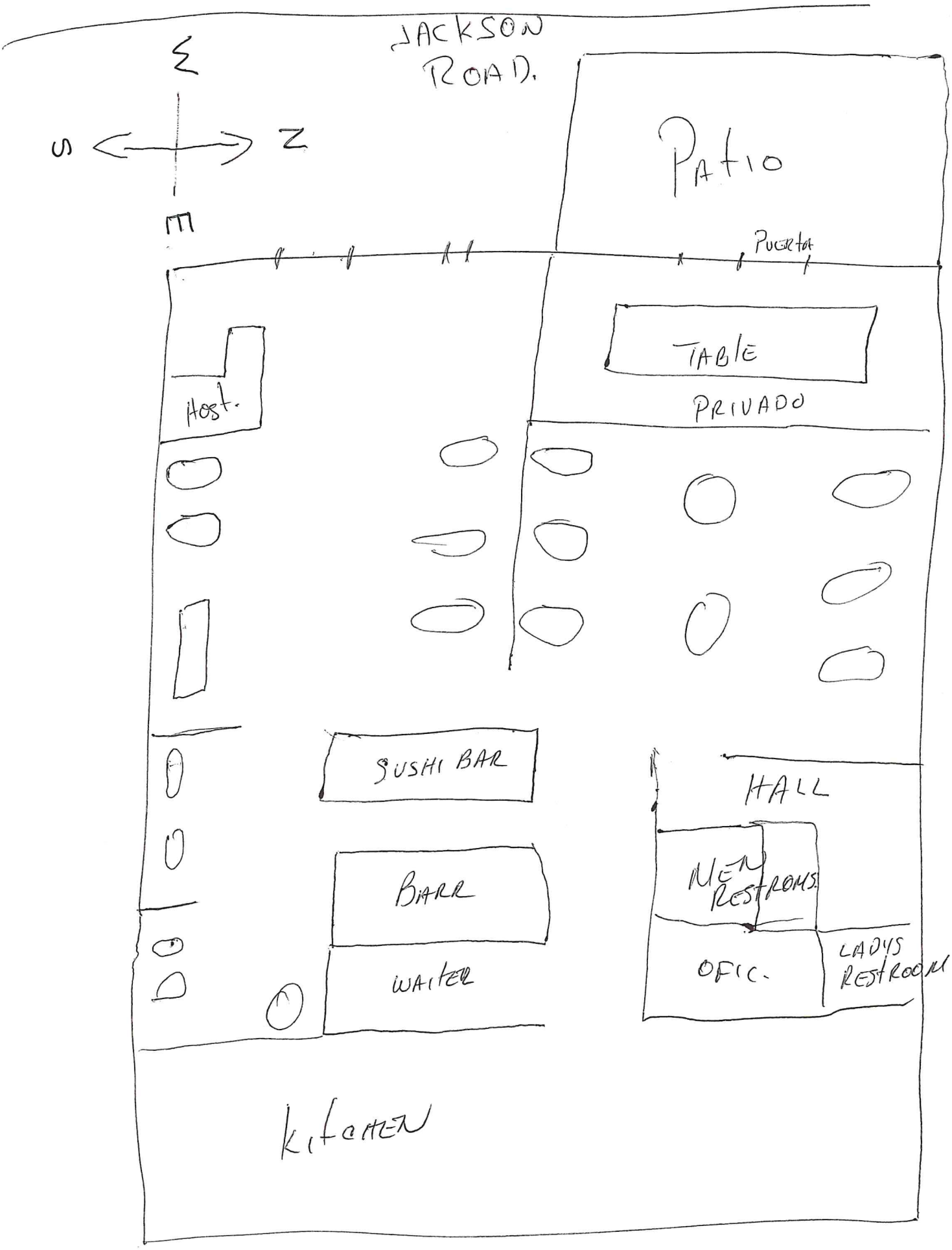
JACKSON ROAD.
E
S
Z
M
Patio
Puerta
TABLE
PRIVADO
Host.
SUSHI BAR
HALL
BARR
MEN RESTROMS.
WAITER
OFIC.
LADYS RESTROOM
KITCHEN

Pharr
Development Services

Site Photo

1401 South Jackson Road, Suites 7 & 8

AGENDA MEMORANDUM

BOARD: BOARD OF COMMISSIONERS

AGENDA ITEM #: 5.H.2.
DATE SUBMITTED: August 12, 2025
MEETING DATE: August 18, 2025

FROM: Kimberly Mendoza, Development Services Director

DEPARTMENT: Development Services

DIRECTOR: Kimberly Mendoza

Agenda Item: Pappas Restaurants, Inc., d/b/a Pappadeaux Seafood Kitchen, is requesting renewal of the Conditional Use Permit to allow the sale of alcoholic beverages for on-premise consumption. The property is legally described as Lot 2, Pappas Subdivision, Pharr, Hidalgo County, Texas. The property's physical address is 1610 West Expressway 83. CUP#100103 **This item supports EV - Economic Vitality.**

Classification: Regular
(* If closed session, City Attorney must review and approve.)

Issue: Pappas Restaurants, Inc., d/b/a Pappadeaux Seafood Kitchen, is requesting renewal of the Conditional Use Permit to allow the sale of alcoholic beverages for on-premise consumption in a General Business District (C). This request constitutes the 13th renewal for Pappadeaux Seafood Kitchen.

Fiscal Consideration: N/A

Staff Recommendation: Development Services recommends approval of the renewal request for the Conditional Use Permit to allow the sale of alcoholic beverages for on-premise consumption in a General Business District (C) subject to site and applicant being in compliance with all City Ordinances and City Department requirements.

Alternatives: N/A

Exclude Material from Public Packet? No
Reason: N/A

ROUTING:

Kimberly Mendoza	Created/Initiated - 08/12/2025
Ricardo Rodriguez	Approved - 08/12/2025
David Friedlein	Approved - 08/12/2025
City Management Office	Final Approval - 08/12/2025

Pharr
Development Services

MEMORANDUM

DATE: MONDAY, AUGUST 18, 2025

TO: MAYOR AND CITY COMMISSION

FROM: KIMBERLY MENDOZA, DIRECTOR OF DEVELOPMENT SERVICES

THROUGH: JONATHAN FLORES, CITY MANAGER

SUBJECT: CONDITIONAL USE PERMIT **RENEWAL** FOR ABC
FILE NO. **CUP#100103 (PAPPADEAUX SEAFOOD KITCHEN)**

GENERAL INFORMATION:

APPLICANT: Pappas Restaurants, Inc., d/b/a Pappadeaux Seafood Kitchen, is requesting renewal of the Conditional Use Permit to allow the sale of alcoholic beverages for on-premise consumption in a General Business District (C).

LEGAL DESCRIPTION: The property is legally described as Lot 2, Pappas Subdivision, Pharr, Hidalgo County, Texas.

LOCATION: The property's physical address is 1610 West Expressway 83.

ZONING: The property is currently zoned General Business District (C). The adjacent zoning is General Business District (C) to the north, south, east, and west. The area is generally designated for commercial use in the Land Use Plan.

COMMENTS:

POLICE CHIEF: Recommends approval of the Conditional Use Permit.

FIRE DEPARTMENT:	Recommends approval of the Conditional Use Permit.
CODE COMPLIANCE:	Recommends approval of the Conditional Use Permit.
HEALTH:	Recommends approval of the Conditional Use Permit.
DEVELOPMENT SERVICES:	Recommends approval of the Conditional Use Permit.

DEVELOPMENT SERVICES RECOMMENDATIONS:

Development Services recommends **approval** of the renewal request for the Conditional Use Permit to allow the sale of alcoholic beverages for on-premise consumption in a General Business District (C) subject to site and applicant being in compliance with all City Ordinances and City Department requirements.

Executive Summary Letter

August 18, 2025

Conditional Use Permit **Renewal** for ABC – Pappadeaux Seafood Kitchen

Background:

Pappas Restaurants, Inc., d/b/a Pappadeaux Seafood Kitchen, is requesting renewal of the Conditional Use Permit to allow the sale of alcoholic beverages for on-premise consumption. This request constitutes the 13th renewal for Pappadeaux Seafood Kitchen.

The property is located at 1610 West Expressway 83. It is zoned General Business District (C) and is in conformance with the Future Land Use Plan. All required inspections have been conducted and have passed.

Recommendations:

Staff recommends **approval** of the renewal request for the Conditional Use Permit to allow the sale of alcoholic beverages for on-premise consumption subject to the site and applicant being in compliance with all City Ordinances and City Department requirements.

CUP Renewal
Lot 2, Pappas Subdivision,
Pappas Restaurants, INC
d/b/a/ Pappadeaux Seafood Kitchen

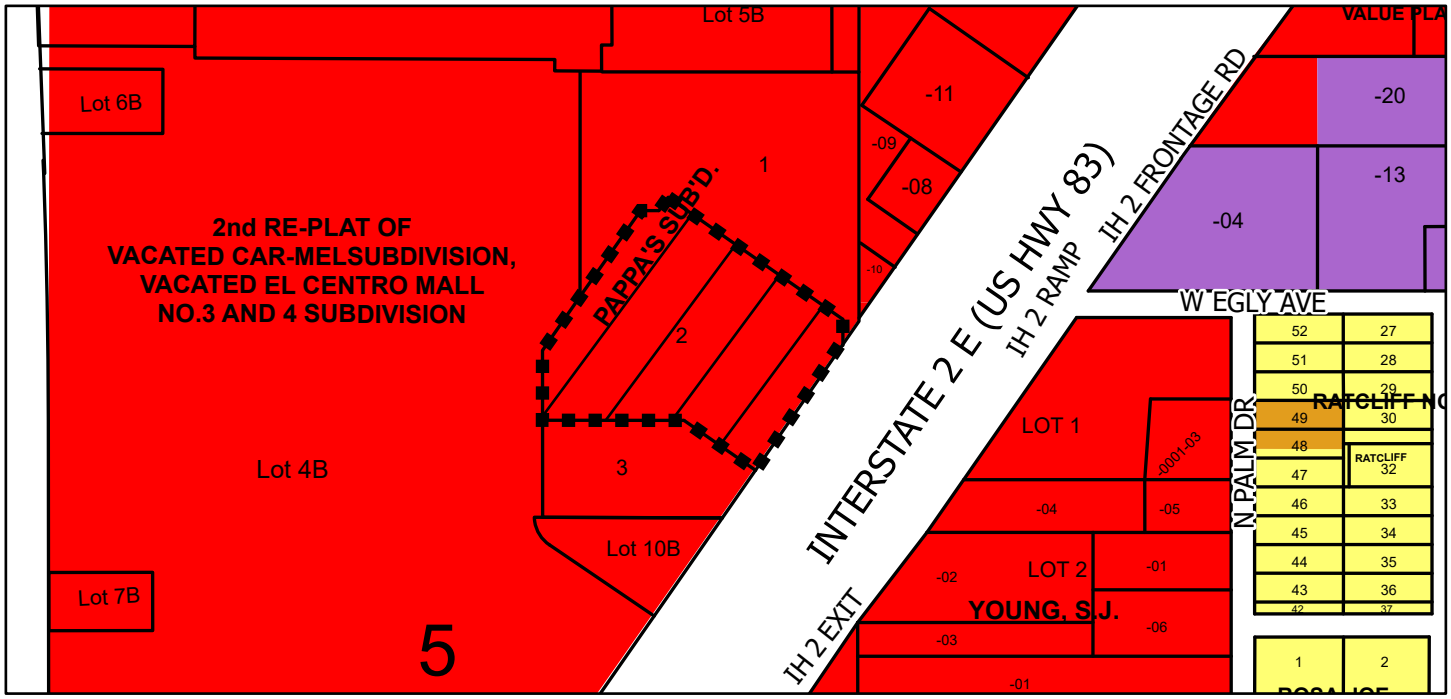

G:\City of Pharr\GIS\Projects\1-Planning\PRO CUP Renewal\CUP_Renewal Base 1610 IH 2 FRONTAGE PAPPADEAUX\00_Renewal Base.aprx

- Subject Property
- Agricultural Open Space
- Single Family
- Single Family Small Lot
- Residential Multi-Family
- Residential Multi-Family High Density
- Mobile Home
- Townhouse
- HUD Code
- Rail Road R.O.W
- Government Owned
- General Business
- Business District
- Drainage Easement
- Heavy Commercial
- Heavy Industrial
- Limited Industrial
- Neighborhood Commercial
- Office Professional
- PSJA ISD
- Hidalgo ISD
- Valley View ISD
- Planned Unit Development

City of Pharr, Texas
Engineering Department
956.402.4221

Scale: 1:4,000

0 165 330 660 990 1,320 Feet

N W E S

Date: 8/7/2025

Pharr
Development Services

Site Photo

1610 West Expressway 83

AGENDA MEMORANDUM

BOARD: BOARD OF COMMISSIONERS

AGENDA ITEM #: 5.H.3.
DATE SUBMITTED: August 12, 2025
MEETING DATE: August 18, 2025

FROM: Kimberly Mendoza, Development Services Director

DEPARTMENT: Development Services

DIRECTOR: Kimberly Mendoza

Agenda Item: Balli Investments and Holdings LLC., d/b/a Calacas Tacos and Beer, is requesting renewal of the Conditional Use Permit to allow the sale of alcoholic beverages for on-premise consumption. The property is legally described as being 0.062 acres, more or less, out of Lot 1, Junction View Subdivision, Pharr, Hidalgo County, Texas. The property's physical address is 2101 North Cage Boulevard, Suites 110 and 111. CUP#220845 **This item supports EV - Economic Vitality.**

Classification: Regular
(* If closed session, City Attorney must review and approve.)

Issue: Balli Investments and Holdings LLC., d/b/a Calacas Tacos and Beer, is requesting renewal of the Conditional Use Permit to allow the sale of alcoholic beverages for on-premise consumption in a General Business District (C). This request constitutes the 2nd renewal for Calacas Tacos and Beer.

Fiscal Consideration: N/A

Staff Recommendation: Development Services recommends approval of the renewal request for the Conditional Use Permit to allow the sale of alcoholic beverages for on-premise consumption in a General Business District (C) subject to site and applicant being in compliance with all City Ordinances and City Department requirements.

Alternatives: N/A

Exclude Material from Public Packet? No
Reason: N/A

ROUTING:

Kimberly Mendoza	Created/Initiated - 08/12/2025
Ricardo Rodriguez	Approved - 08/12/2025
David Friedlein	Approved - 08/12/2025
City Management Office	Final Approval - 08/12/2025

Pharr
Development Services

MEMORANDUM

DATE: MONDAY, AUGUST 18, 2025

TO: MAYOR AND CITY COMMISSION

FROM: KIMBERLY MENDOZA, DIRECTOR OF DEVELOPMENT SERVICES

THROUGH: JONATHAN FLORES, CITY MANAGER

SUBJECT: CONDITIONAL USE PERMIT **RENEWAL** FOR ABC
FILE NO. **CUP#220845 (CALACAS TACOS AND BEER)**

GENERAL INFORMATION:

APPLICANT: Balli Investments and Holdings LLC., d/b/a Calacas Tacos and Beer, is requesting renewal of the Conditional Use Permit to allow the sale of alcoholic beverages for on-premise consumption in a General Business District (C).

LEGAL DESCRIPTION: The property is legally described as being 0.062 acres, more or less, out of Lot 1, Junction View Subdivision, Pharr, Hidalgo County, Texas.

LOCATION: The property's physical address is 2101 North Cage Boulevard, Suites 110 and 111.

ZONING: The property is currently zoned General Business District (C). The surrounding area is zoned General Business District (C) to the north, south, east, and west. This area is generally designated for commercial use in the Land Use Plan.

COMMENTS:

POLICE CHIEF: Recommends approval of the Conditional Use Permit.

FIRE DEPARTMENT: Recommends approval of the Conditional Use Permit.

CODE COMPLIANCE:	Recommends approval of the Conditional Use Permit.
HEALTH:	Recommends approval of the Conditional Use Permit.
DEVELOPMENT SERVICES:	Recommends approval of the Conditional Use Permit.

DEVELOPMENT SERVICES RECOMMENDATIONS: Development Services recommends **approval** of the renewal request for the Conditional Use Permit to allow the sale of alcoholic beverages for on-premise consumption in a General Business District (C) subject to site and applicant being in compliance with all City Ordinances and City Department requirements.

Executive Summary Letter

August 18, 2025

Conditional Use Permit **Renewal** for ABC – Calacas Tacos and Beer

Background:

Balli Investments and Holdings LLC., d/b/a Calacas Tacos and Beer, is requesting renewal of the Conditional Use Permit to allow the sale of alcoholic beverages for on-premise consumption. This request constitutes the 2nd renewal for Calacas Tacos and Beer.

The property is located at 2101 North Cage Boulevard, Suites 110 and 111. It is zoned General Business District (C) and is in conformance with the Future Land Use Plan. All required inspections have been conducted and have passed.

Recommendations:

Staff recommends **approval** of the renewal request for the Conditional Use Permit to allow the sale of alcoholic beverages for on-premise consumption subject to the site and applicant being in compliance with all City Ordinances and City Department requirements.

CUP Renewal
2101 N CAGE BLVD
CALACAS TACOS & BEER

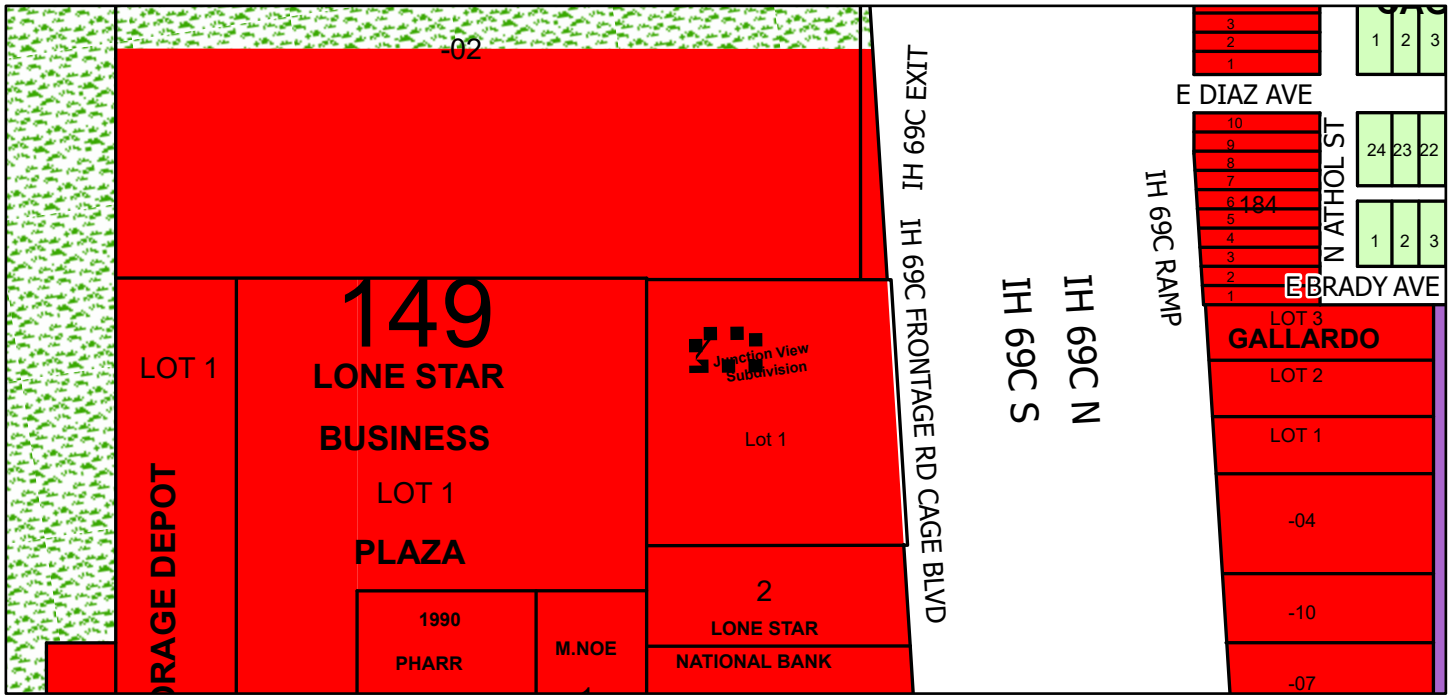

G:\City of Pharr\GIS\Projects\1-Planning\PRO CUP Renewal\CUP_Renewal_2101 N CAGE BLVD CALACAS TACOS\00_Renewal Base.aprx

- Agricultural Open Space
- Single Family
- Single Family Small Lot
- Residential Multi-Family
- Residential Multi-Family High Density
- Mobile Home
- Townhouse
- HUD Code
- Rail Road R.O.W
- Government Owned
- General Business
- Business District
- Drainage Easement
- Heavy Commercial
- Heavy Industrial
- Limited Industrial
- Neighborhood Commercial
- Office Professional
- PSJA ISD
- Hidalgo ISD
- Valley View ISD
- Planned Unit Development

City of Pharr, Texas
Engineering Department
956.702.5355

Scale: 1:3,000

0 125 250 500 750 1,000 Feet

N W E S

Date: 8/7/2025

Pharr
Development Services

Site Photo

2101 North Cage Boulevard

AGENDA MEMORANDUM

BOARD: BOARD OF COMMISSIONERS

AGENDA ITEM #: 5.H.4.
DATE SUBMITTED: August 12, 2025
MEETING DATE: August 18, 2025

FROM: Kimberly Mendoza, Development Services Director

DEPARTMENT: Development Services

DIRECTOR: Kimberly Mendoza

Agenda Item: Rommel Organista, d/b/a Kurai Chinese & Sushi Restaurant, is requesting renewal of the Conditional Use Permit to allow the sale of alcoholic beverages for on-premise consumption. The property is legally described as Lot 1, Jackson Ridge Court Phase II Subdivision, Pharr, Hidalgo County, Texas. The property's physical address is 1201 South Jackson Road, Suite 1. CUP#120424 **This item supports EV - Economic Vitality.**

Classification: Regular
(* If closed session, City Attorney must review and approve.)

Issue: Rommel Organista, d/b/a Kurai Chinese & Sushi Restaurant, is requesting renewal of the Conditional Use Permit to allow the sale of alcoholic beverages for on-premise consumption in a General Business District (C). This request constitutes the 11th renewal for Kurai Chinese & Sushi Restaurant.

Fiscal Consideration: N/A

Staff Recommendation: Development Services recommends approval of the renewal request for the Conditional Use Permit to allow the sale of alcoholic beverages for on-premise consumption in a General Business District (C) subject to applicant and site being in compliance with all City Ordinances and City Department requirements.

Alternatives: N/A

Exclude Material from Public Packet? No
Reason: N/A

ROUTING:

Kimberly Mendoza	Created/Initiated - 08/12/2025
Ricardo Rodriguez	Approved - 08/12/2025
David Friedlein	Approved - 08/12/2025
City Management Office	Final Approval - 08/12/2025

Pharr
Development Services

MEMORANDUM

DATE: MONDAY, AUGUST 18, 2025

TO: MAYOR AND CITY COMMISSION

FROM: KIMBERLY MENDOZA, DIRECTOR OF DEVELOPMENT SERVICES

THROUGH: JONATHAN FLORES, CITY MANAGER

SUBJECT: CONDITIONAL USE PERMIT **RENEWAL** FOR ABC –
FILE NO. **CUP#120424 (KURAI CHINESE & SUSHI RESTAURANT)**

GENERAL INFORMATION:

APPLICANT: Rommel Organista, d/b/a Kurai Chinese & Sushi Restaurant, is requesting renewal of the Conditional Use Permit to allow the sale of alcoholic beverages for on-premise consumption in a General Business District (C).

LEGAL DESCRIPTION: The property is legally described as Lot 1, Jackson Ridge Court Phase II Subdivision, Pharr, Hidalgo County, Texas.

LOCATION: The property's physical address is 1201 South Jackson Road, Suite 1.

ZONING: The property is currently zoned General Business District (C). The adjacent zoning is General Business District (C) to the north, south, and east and Pharr City Limit lies to the West. The area is generally designated for commercial use in the Land Use Plan.

COMMENTS: **POLICE CHIEF:** Recommends approval of the Conditional Use Permit.

FIRE DEPARTMENT:	Recommends approval of the Conditional Use Permit.
CODE COMPLIANCE:	Recommends approval of the Conditional Use Permit.
HEALTH:	Recommends approval of the Conditional Use Permit.
DEVELOPMENT SERVICES:	Recommends approval of the Conditional Use Permit.
DEVELOPMENT SERVICES RECOMMENDATIONS:	Development Services recommends **approval** of the renewal request for the Conditional Use Permit to allow the sale of alcoholic beverages for on-premise consumption in a General Business District (C) subject to applicant and site being in compliance with all City Ordinances and City Department requirements.

Executive Summary Letter

August 18, 2025

Conditional Use Permit **Renewal** for ABC – Kurai Chinese & Sushi Restaurant

Background:

Rommel Organista, d/b/a Kurai Chinese & Sushi Restaurant, is requesting renewal of the Conditional Use Permit to allow the sale of alcoholic beverages for on-premise consumption. This request constitutes the 11th renewal for Kurai Chinese & Sushi Restaurant.

The property is located at 1201 South Jackson Road, Suite 1. It is zoned General Business District (C) and is in conformance with the Future Land Use Plan. All required inspections have been conducted and have passed.

Recommendations:

Staff recommends **approval** of the renewal request for the Conditional Use Permit to allow the sale of alcoholic beverage for on-premise consumption subject to the site and applicant being in compliance with all City Ordinances and City Department requirements.

CUP Renewal
1201 S JACKSON RD
ROMMEL ORGANISTA d/b/a KURAI

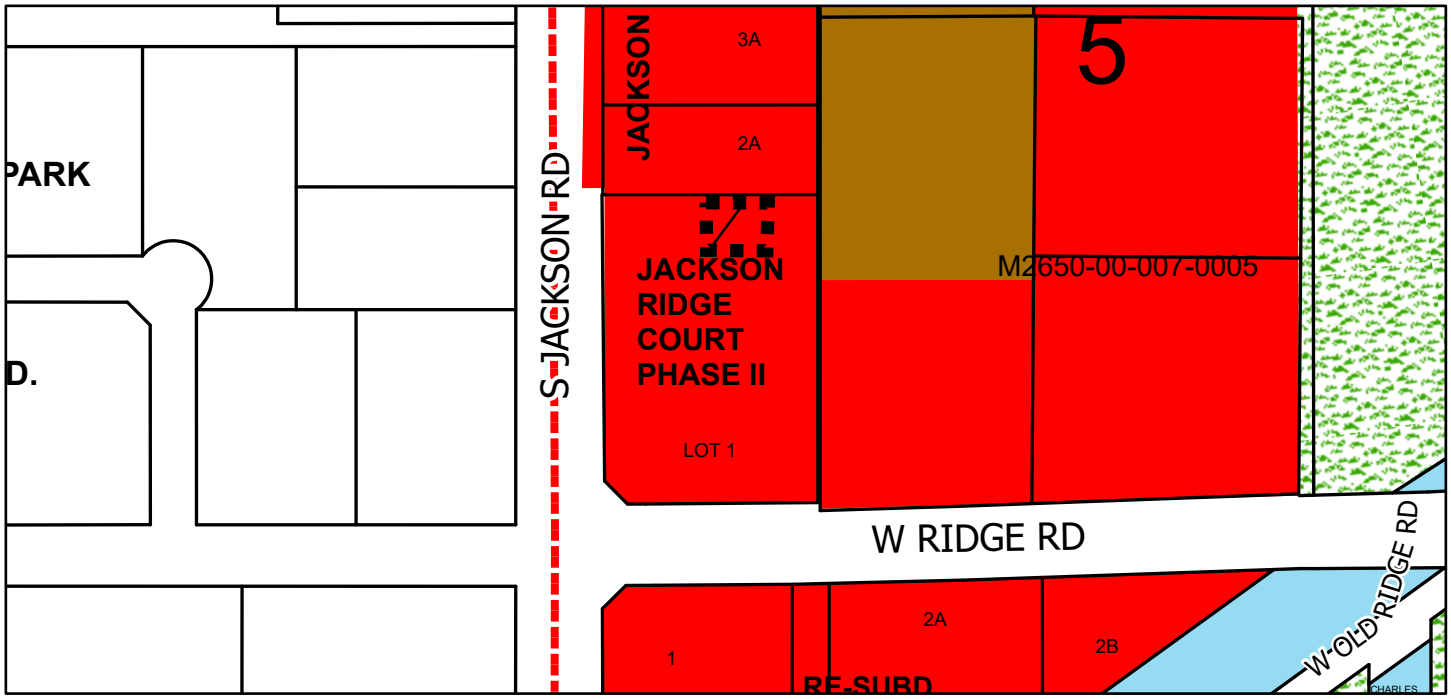

G:\City of Pharr\GIS\Projects\1-Planning\PRO CUP Renewal\CUP_Renewal 1201 S JACKSON RD KURAI\00_Renewal Base.aprx

- Agricultural Open Space
- Single Family
- Single Family Small Lot
- Residential Multi-Family
- Residential Multi-Family High Density
- Mobile Home
- Townhouse
- HUD Code
- Rail Road R.O.W
- Government Owned
- General Business
- Business District
- Drainage Easement
- Heavy Commercial
- Heavy Industrial
- Limited Industrial
- Neighborhood Commercial
- Office Professional
- PSJA ISD
- Hidalgo ISD
- Valley View ISD
- Planned Unit Development

City of Pharr, Texas
Engineering Department
956.702.5355

Scale: 1:3,000

0 125 250 500 750 1,000 Feet

N W E S

Date: 8/7/2025

Pharr
Development Services

Site Photo

1201 South Jackson Road, Suite 1

AGENDA MEMORANDUM

BOARD: BOARD OF COMMISSIONERS

AGENDA ITEM #: 5.H.5.
DATE SUBMITTED: August 12, 2025
MEETING DATE: August 18, 2025

FROM: Kimberly Mendoza, Development Services Director

DEPARTMENT: Development Services

DIRECTOR: Kimberly Mendoza

Agenda Item: Edinburg RAM, LLC, dba Khan's Grill, is requesting renewal of the Conditional Use Permit and Late Hours Permit to allow the sale of alcoholic beverages for on-premise consumption. The property is legally described as being Lot 6A, Jackson Ridge Court Subdivision Phase III – Amended Plat, Pharr, Hidalgo County, Texas. The property's physical address is 1005 South Jackson Road. CUP#180644 **This item supports EV - Economic Vitality.**

Classification: Regular
(* If closed session, City Attorney must review and approve.)

Issue: Edinburg RAM, LLC, dba Khan's Grill, is requesting renewal of the Conditional Use Permit and Late Hours Permit to allow the sale of alcoholic beverages for on-premise consumption in a General Business District (C). This request constitutes the 7th renewal for Khan's Grill.

Fiscal Consideration: N/A

Staff Recommendation: Development Services recommends approval of the renewal request for the Conditional Use Permit and Late Hours Permit to allow the sale of alcoholic beverages for on-premise consumption in a General Business District (C) subject to site and applicant being in compliance with all City Ordinances and City Department requirements.

Alternatives: N/A

Exclude Material from Public Packet? No
Reason: N/A

ROUTING:

Kimberly Mendoza	Created/Initiated - 08/12/2025
Ricardo Rodriguez	Approved - 08/12/2025
David Friedlein	Approved - 08/12/2025
City Management Office	Final Approval - 08/12/2025

Pharr
Development Services

MEMORANDUM

DATE: MONDAY, AUGUST 18, 2025

TO: MAYOR AND CITY COMMISSION

FROM: KIMBERLY MENDOZA, DIRECTOR OF DEVELOPMENT SERVICES

THROUGH: JONATHAN FLORES, CITY MANAGER

SUBJECT: CONDITIONAL USE PERMIT & LATE HOURS PERMIT **RENEWAL** FOR **ABC** – FILE NO. **CUP#180644** (KHAN'S GRILL)

GENERAL INFORMATION:

APPLICANT: Edinburg RAM, LLC, dba Khan's Grill, is requesting renewal of the Conditional Use Permit and Late Hours Permit to allow the sale of alcoholic beverages for on-premise consumption in a General Business District (C).

LEGAL DESCRIPTION: The property is legally described as being Lot 6A, Jackson Ridge Court Subdivision Phase III – Amended Plat, Pharr, Hidalgo County, Texas.

LOCATION: The property's physical address is 1005 South Jackson Road.

ZONING: The property is currently zoned General Business District (C). The surrounding area is zoned General Business District (C) to the north, south and east, and City of Pharr limits lie to the west. The area is generally designated for commercial use in the Land Use Plan.

COMMENTS:

POLICE CHIEF: Recommends approval of the Conditional Use Permit.

FIRE DEPARTMENT: Recommends approval of the Conditional Use Permit.

CODE COMPLIANCE:	Recommends approval of the Conditional Use Permit.
HEALTH:	Recommends approval of the Conditional Use Permit.
DEVELOPMENT SERVICES:	Recommends approval of the Conditional Use Permit.

DEVELOPMENT SERVICES RECOMMENDATION: Development Services recommends **approval** of the renewal request for the Conditional Use Permit and Late Hours Permit to allow the sale of alcoholic beverages for on-premise consumption in a General Business District (C) subject to site and applicant being in compliance with all City Ordinances and City Department requirements.

Executive Summary Letter

August 18, 2025

Conditional Use Permit **Renewal** for ABC – Khan's Grill

Background:

Edinburg RAM, LLC., d/b/a Khan's Grill, is requesting renewal of the Conditional Use Permit and Late Hours Permit to allow the sale of alcoholic beverages for on-premise consumption. This request constitutes the 7th renewal for Khan's Grill.

The property is located at 1005 South Jackson Road. It is zoned General Business District (C) and is in conformance with the Future Land Use Plan. All required inspections have been conducted and have passed.

Recommendations:

Staff recommends **approval** of the renewal request for the Conditional Use Permit and Late Hours Permit to allow the sale of alcoholic beverage for on-premise consumption subject to the site and applicant being in compliance with all City Ordinances and City Department requirements.

CUP Renewal
1005 S JACKSON RD
RICARDO CABALLERO DBA KHANS GRILL

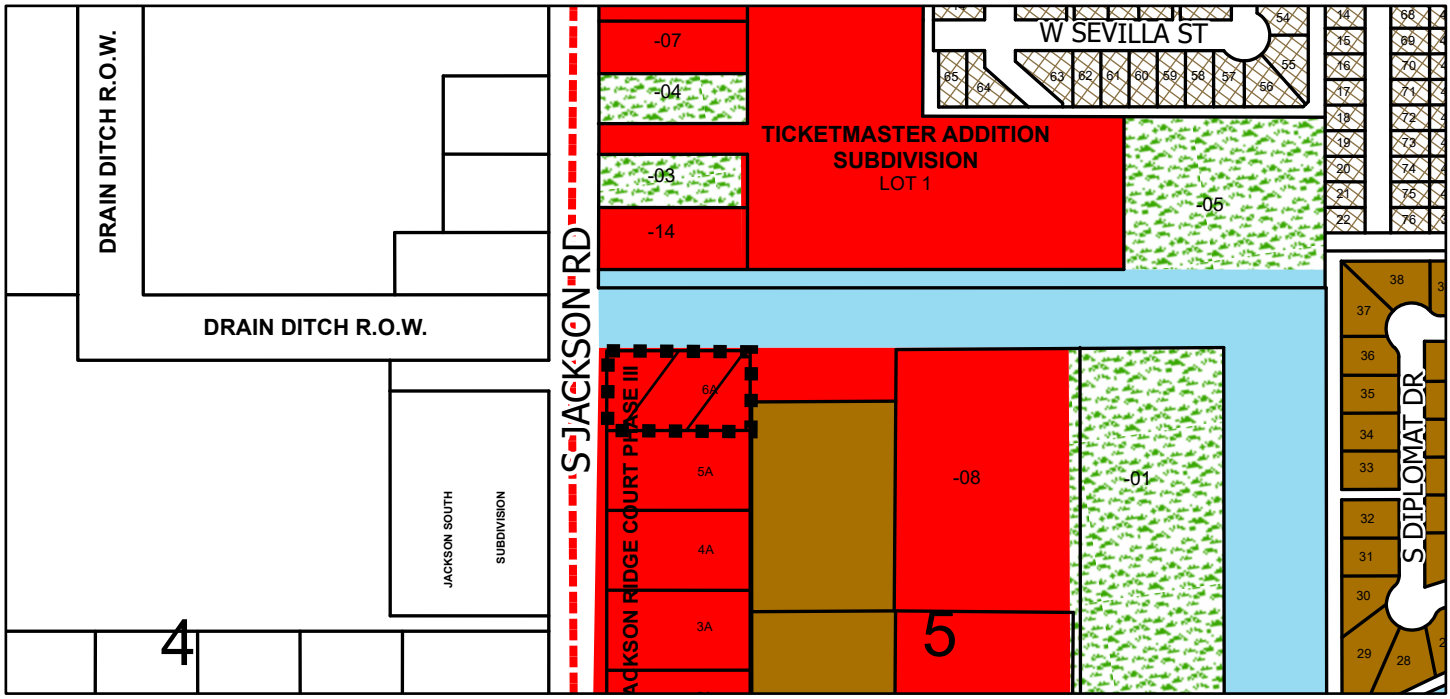

G:\City of Pharr\GIS\Projects\1-Planning\PRO CUP Renewal\CUP_RENEWAL 1005 S JACKSON RD KHANS GRILL\00_Renewal Base.aprx

- Agricultural Open Space
- Single Family
- Single Family Small Lot
- Residential Multi-Family
- Residential Multi-Family High Density
- Mobile Home
- Townhouse
- HUD Code
- Rail Road R.O.W
- Government Owned
- General Business
- Business District
- Drainage Easement
- Heavy Commercial
- Heavy Industrial
- Limited Industrial
- Neighborhood Commercial
- Office Professional
- PSJA ISD
- Hidalgo ISD
- Valley View ISD
- Planned Unit Development

City of Pharr, Texas
Engineering Department
956.702.5355

Scale: 1:4,500

0 187.5 375 750 1,125 1,500 Feet

N W E S

Date: 8/7/2025

Pharr
Development Services

Site Photo

1005 South Jackson Road

AGENDA MEMORANDUM

BOARD: BOARD OF COMMISSIONERS

AGENDA ITEM #: 5.H.6.
DATE SUBMITTED: August 12, 2025
MEETING DATE: August 18, 2025

FROM: Kimberly Mendoza, Development Services Director

DEPARTMENT: Development Services

DIRECTOR: Kimberly Mendoza

Agenda Item: Velch Ventures LLC., d/b/a Altamar Seafood Bar, is requesting renewal of the Conditional Use Permit to allow the sale of alcoholic beverages for on-premise consumption. The property is legally described as being .092 acres, more or less, out of Lot 1, Spamer Business Park Subdivision, Pharr, Hidalgo County, Texas. The property's physical address is 8001 South Jackson Road, Suites 1 & 2. CUP#210427 **This item supports EV - Economic Vitality.**

Classification: Regular
(* If closed session, City Attorney must review and approve.)

Issue: Velch Ventures LLC., d/b/a Altamar Seafood Bar, is requesting renewal of the Conditional Use Permit to allow the sale of alcoholic beverages for on-premise consumption in a Limited Industrial District (L-I). This request constitutes the 2nd renewal for Altamar Seafood Bar.

Fiscal Consideration: N/A

Staff Recommendation: Development Services recommends approval of the renewal request for the Conditional Use Permit to allow the sale of alcoholic beverages for on-premise consumption in a Limited Industrial District (L-I) subject to site and applicant being in compliance with all City Ordinances and City Department requirements.

Alternatives: N/A

Exclude Material from Public Packet? No
Reason: N/A

ROUTING:

Kimberly Mendoza	Created/Initiated - 08/12/2025
Ricardo Rodriguez	Approved - 08/13/2025
David Friedlein	Approved - 08/13/2025
City Management Office	Final Approval - 08/13/2025

Pharr
Development Services

MEMORANDUM

DATE: MONDAY, AUGUST 18, 2025

TO: MAYOR AND CITY COMMISSION

FROM: KIMBERLY MENDOZA, DIRECTOR OF DEVELOPMENT SERVICES

THROUGH: JONATHAN FLORES, CITY MANAGER

SUBJECT: CONDITIONAL USE PERMIT **RENEWAL** FOR ABC - FILE NO. **CUP#210427 (ALTAMAR SEAFOOD BAR)**

GENERAL INFORMATION:

APPLICANT: Velch Ventures LLC., d/b/a Altamar Seafood Bar, is requesting renewal of the Conditional Use Permit to allow the sale of alcoholic beverages for on-premise consumption in a Limited Industrial District (L-I).

LEGAL DESCRIPTION: The property is legally described as being .092 acres, more or less, out of Lot 1, Spamer Business Park Subdivision, Pharr, Hidalgo County, Texas.

LOCATION: The property's physical address is 8001 South Jackson Road, Suites 1 & 2.

ZONING: The property is currently zoned Limited Industrial District (L-I). The surrounding area is zoned Limited Industrial District (L-I) to the north, south, and east and the City Limits lie to the west. This area is generally designated for commercial use in the Land Use Plan.

COMMENTS: **POLICE CHIEF:** Recommends approval of the Conditional Use Permit.

FIRE DEPARTMENT:	Recommends approval of the Conditional Use Permit.
CODE COMPLIANCE:	Recommends approval of the Conditional Use Permit.
HEALTH:	Recommends approval of the Conditional Use Permit.
DEVELOPMENT SERVICES:	Recommends approval of the Conditional Use Permit.

DEVELOPMENT SERVICES RECOMMENDATIONS: Development Services recommends **approval** of the renewal request for the Conditional Use Permit to allow the sale of alcoholic beverages for on-premise consumption in a Limited Industrial District (L-I) subject to site and applicant being in compliance with all City Ordinances and City Department requirements.

Executive Summary Letter

August 18, 2025

Conditional Use Permit **Renewal** for ABC - Altamar Seafood Bar

Background:

Velch Ventures LLC., d/b/a Altamar Seafood Bar, is requesting renewal of the Conditional Use Permit to allow the sale of alcoholic beverage for on-premise consumption. This request constitutes the 2nd renewal for Altamar Seafood Bar.

The property is located at 8001 South Jackson Road, Suites 1 & 2. It is zoned Limited Industrial District (L-I) and is in conformance with the Future Land Use. All required inspections have been conducted and have passed.

Recommendations:

Staff recommends **approval** of the renewal request for the Conditional Use Permit to allow the sale of alcoholic beverages for on-premise consumption subject to the site and applicant being in compliance with all City Ordinances and City Department requirements.

CUP Renewal
8001 S JACKSON RD ALTAMAR
.092 acres, more or less, out of Lot 1,
Spamer Business Park Subdivision
ALTAMAR SEAFOOD BAR

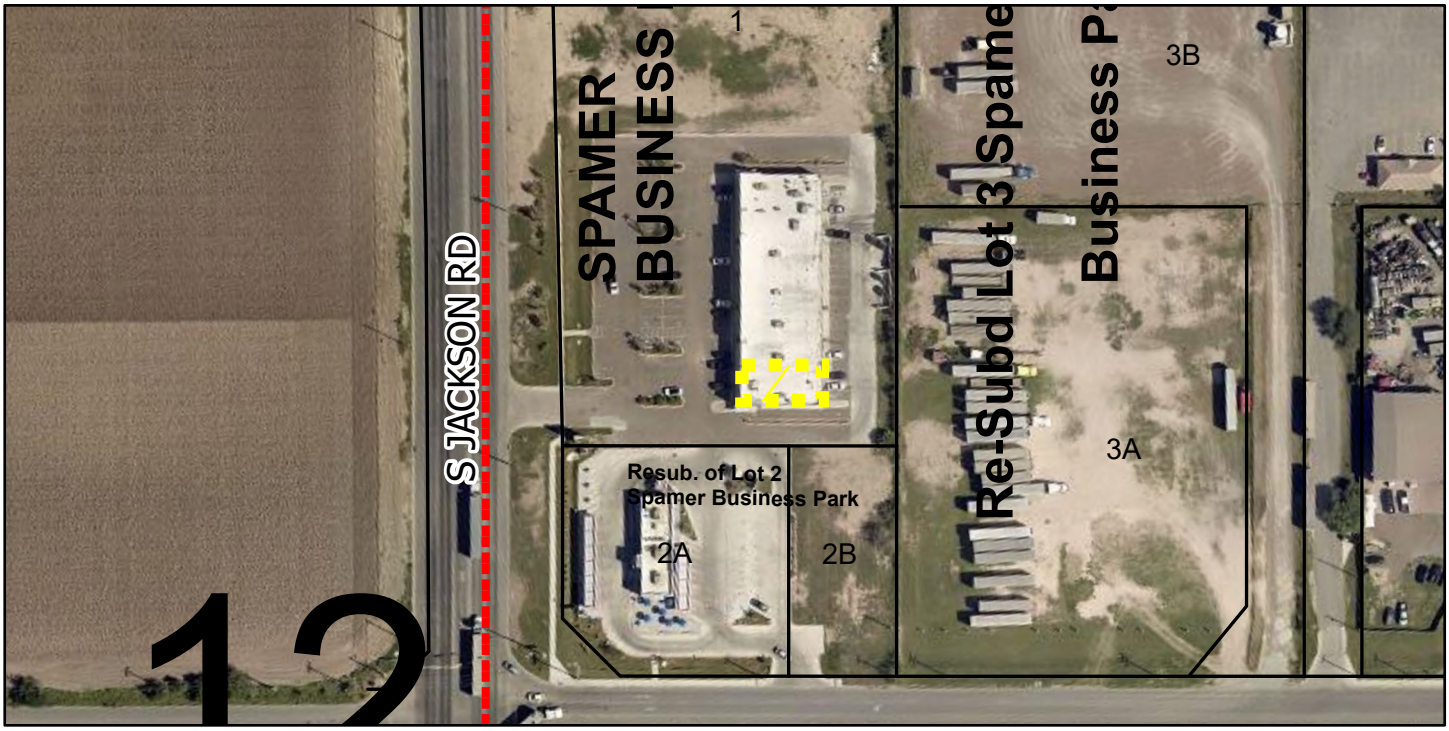

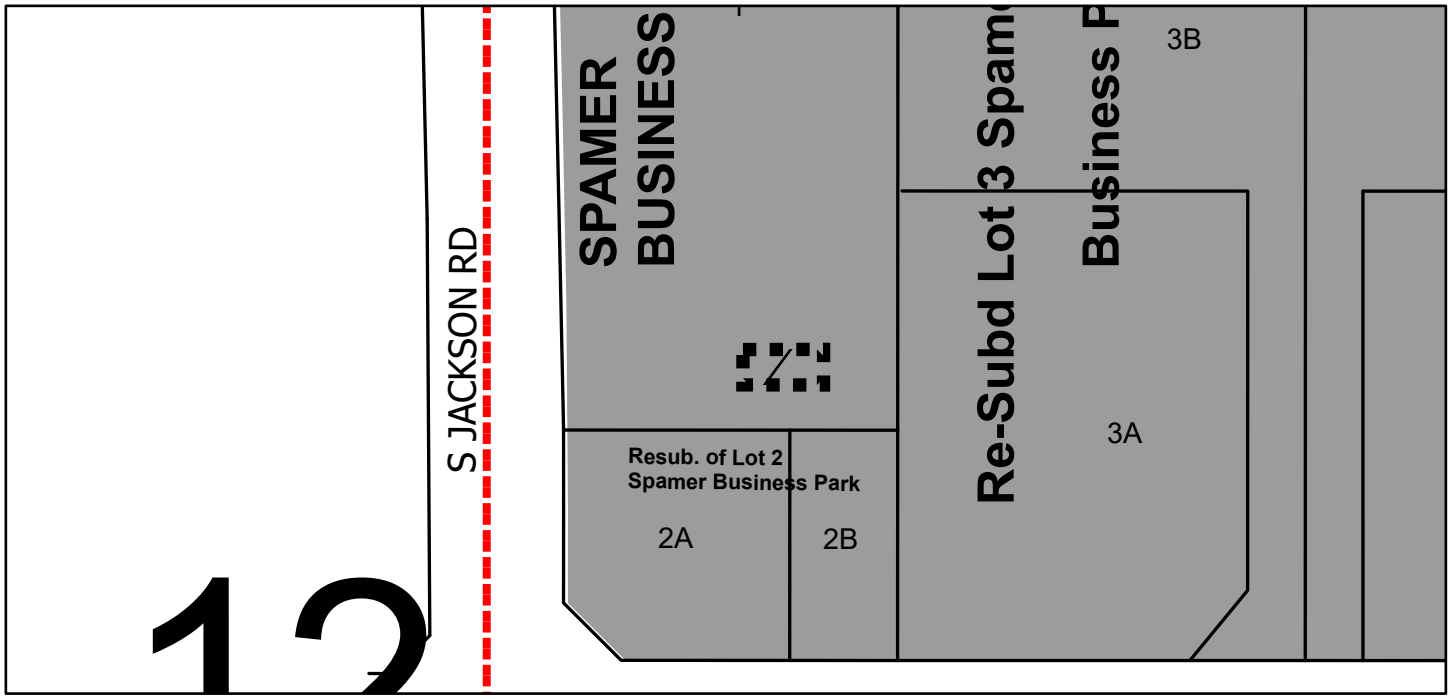

G:\City of Pharr\GIS\Projects\1-Planning\PRO CUP Renewal\CUP_RENEWAL 8001 S JACKSON RD ALTAMAR\00_Renewal Base.aprx

- Agricultural Open Space
- Single Family
- Single Family Small Lot
- Residential Multi-Family
- Residential Multi-Family High Density
- Mobile Home
- Townhouse
- HUD Code
- Rail Road R.O.W
- Government Owned
- General Business
- Business District
- Drainage Easement
- Heavy Commercial
- Heavy Industrial
- Limited Industrial
- Neighborhood Commercial
- Office Professional
- PSJA ISD
- Hidalgo ISD
- Valley View ISD
- Planned Unit Development

City of Pharr, Texas
Engineering Department
956.702.5355

Scale: 1:2,000

0 80 160 320 480 640 Feet

N W E S

Date: 8/11/2025

Pharr
Development Services

Site Photo

8001 South Jackson Road, Suites 1 & 2

AGENDA MEMORANDUM

BOARD: BOARD OF COMMISSIONERS

AGENDA ITEM #: 5.H.7.
DATE SUBMITTED: August 13, 2025
MEETING DATE: August 18, 2025

FROM: Kimberly Mendoza, Development Services Director

DEPARTMENT: Development Services

DIRECTOR: Kimberly Mendoza

Agenda Item: Mario Alberto Torres, d/b/a On the Grill Restaurant, is requesting renewal of the Conditional Use Permit to allow the sale of alcoholic beverages for on-premise consumption. The property is legally described as 0.075 of an acre, more or less, out of Lot 1, Jackson Ridge Court Subdivision Phase II, Pharr, Hidalgo County, Texas. The property's physical address is 1201 South Jackson Road, Suite 7. CUP#170740 **This item supports EV - Economic Vitality.**

Classification: Regular
(* If closed session, City Attorney must review and approve.)

Issue: Mario Alberto Torres, d/b/a On the Grill Restaurant, is requesting renewal of the Conditional Use Permit to allow the sale of alcoholic beverages for on-premise consumption in a General Business District (C). This request constitutes the 7th renewal for On the Grill Restaurant.

Fiscal Consideration: N/A

Staff Recommendation: Development Services recommends approval of the renewal request for the Conditional Use Permit to allow the sale of alcoholic beverages for on-premise consumption in a General Business District (C) subject to site and applicant being in compliance with all City Ordinances and City Department requirements.

Alternatives: N/A

Exclude Material from Public Packet? No
Reason: N/A

ROUTING:

Kimberly Mendoza	Created/Initiated - 08/13/2025
Ricardo Rodriguez	Approved - 08/13/2025
David Friedlein	Approved - 08/13/2025
City Management Office	Final Approval - 08/13/2025

Pharr
Development Services

MEMORANDUM

DATE: MONDAY, AUGUST 18, 2025

TO: MAYOR AND CITY COMMISSION

FROM: KIMBERLY MENDOZA, DIRECTOR OF DEVELOPMENT SERVICES

THROUGH: JONATHAN FLORES, CITY MANAGER

SUBJECT: CONDITIONAL USE PERMIT **RENEWAL** FOR **ABC –**
FILE NO. **CUP#170740 (ON THE GRILL RESTAURANT)**

GENERAL INFORMATION:

APPLICANT: Mario Alberto Torres, d/b/a On the Grill Restaurant, is requesting renewal of the Conditional Use Permit to allow the sale of alcoholic beverages for on-premise consumption in a General Business District (C).

LEGAL DESCRIPTION: The property is legally described as 0.075 of an acre, more or less, out of Lot 1, Jackson Ridge Court Subdivision Phase II, Pharr, Hidalgo County, Texas.

LOCATION: The property's physical address is 1201 South Jackson Road, Suite 7.

ZONING: The property is currently zoned General Business District (C). The surrounding area is zoned General Business District (C) to the north and south. The property to the east is zoned General Business District (C) and Residential Multi-Family High Density District (R-MFHD). The city limits lie to the west. The area is generally designated for commercial use in the Land Use Plan.

COMMENTS: **POLICE CHIEF:** Recommends approval of the Conditional Use Permit.

FIRE DEPARTMENT:	Recommends approval of the Conditional Use Permit.
CODE COMPLIANCE:	Recommends approval of the Conditional Use Permit.
HEALTH:	Recommends approval of the Conditional Use Permit.
DEVELOPMENT SERVICES:	Recommends approval of the Conditional Use Permit.

DEVELOPMENT SERVICES RECOMMENDATION: Development Services recommends **approval** of the renewal request for the Conditional Use Permit to allow the sale of alcoholic beverages for on-premise consumption in a General Business District (C) subject to site and applicant being in compliance with all City Ordinances and City Department requirements.

Executive Summary Letter

August 18, 2025

Conditional Use Permit **Renewal** for ABC – On the Grill Restaurant

Background:

Mario Alberto Torres, d/b/a On the Grill Restaurant, is requesting renewal of the Conditional Use Permit to allow the sale of alcoholic beverages for on-premise consumption. This request constitutes the 7th renewal for On the Grill Restaurant.

The property is located at 1201 South Jackson Road, Suite 7. It is zoned General Business District (C) and is in conformance with the Future Land Use Plan. All required inspections have been conducted and have passed.

Recommendations:

Staff recommends **approval** of the renewal request for the Conditional Use Permit to allow the sale of alcoholic beverage for on-premise consumption subject to the site and applicant being in compliance with all City Ordinances and City Department requirements.

CUP Renewal
1201 S JACKSON RD STE 7 0.075 ac out of Lot 1
Jackson Ridge Court Subdivision
Mario Alberto Torres d/b/a On The Grill Restaurant

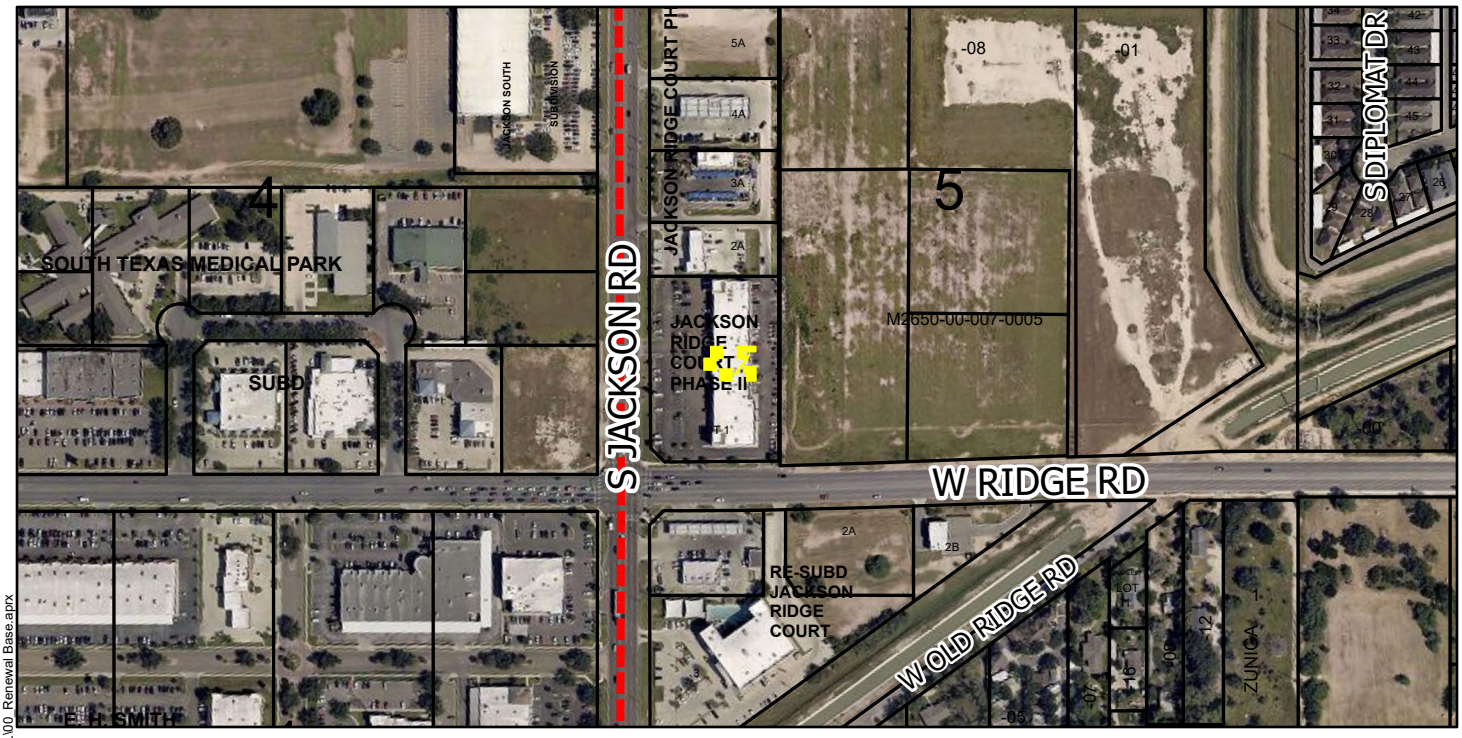

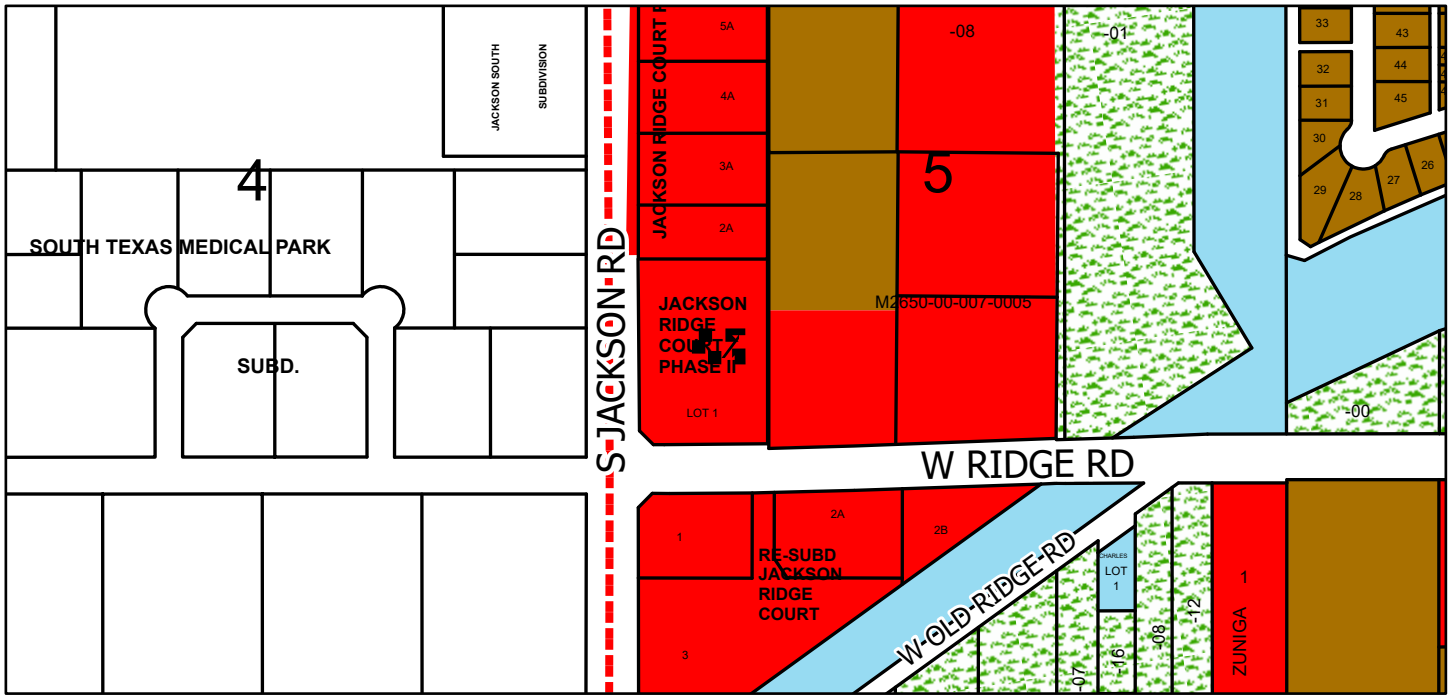

G:\City of Pharr\GIS\Projects\1-Planning\PRO CUP Renewal\CUP_Renewal 1201 S JACKSON RD STE 7 ON THE GRILL\00_Renewal Base.aprx

- Agricultural Open Space
- Single Family
- Single Family Small Lot
- Residential Multi-Family
- Residential Multi-Family High Density
- Mobile Home
- Townhouse
- HUD Code
- Rail Road R.O.W
- Government Owned
- General Business
- Business District
- Drainage Easement
- Heavy Commercial
- Heavy Industrial
- Limited Industrial
- Neighborhood Commercial
- Office Professional
- PSJA ISD
- Hidalgo ISD
- Valley View ISD
- Planned Unit Development

City of Pharr, Texas
Engineering Department
956.702.5355

Scale: 1:5,000

0 205 410 820 1,230 1,640 Feet

N W E S

Date: 8/11/2025

Pharr
Development Services

Site Photo

1201 South Jackson Road, Suite 7

AGENDA MEMORANDUM

BOARD: BOARD OF COMMISSIONERS

AGENDA ITEM #: 5.H.8.
DATE SUBMITTED: August 13, 2025
MEETING DATE: August 18, 2025

FROM: Kimberly Mendoza, Development Services Director

DEPARTMENT: Development Services

DIRECTOR: Kimberly Mendoza

Agenda Item: Macumba Paradise, LLC., d/b/a La Cabaña Sinaloense, is requesting renewal of the Conditional Use Permit and Late Hours Permit to allow the sale of alcoholic beverages for on-premise consumption. The property is legally described as being Lot 97, Kelly-Pharr Subdivision, Pharr, Hidalgo County, Texas. The property is physically located at 1209 East Nolana Loop. CUP#160736 **This item supports EV - Economic Vitality.**

Classification: Regular
(* If closed session, City Attorney must review and approve.)

Issue: Macumba Paradise, LLC., d/b/a La Cabaña Sinaloense, is requesting renewal of the Conditional Use Permit and Late Hours Permit to allow the sale of alcoholic beverages for on-premise consumption in a General Business District (C). This request constitutes the 7th renewal for Macumba Paradise, LLC.

Fiscal Consideration: N/A

Staff Recommendation: Development Services recommends approval of the renewal request for the Conditional Use Permit and Late Hours Permit to allow the sale of alcoholic beverages for on-premise consumption in a General Business District (C) subject to site and applicant being in compliance with all City Ordinances and City Department requirements.

Alternatives: N/A

Exclude Material from Public Packet? No
Reason: N/A

ROUTING:

Kimberly Mendoza	Created/Initiated - 08/13/2025
Ricardo Rodriguez	Approved - 08/13/2025
David Friedlein	Approved - 08/13/2025
City Management Office	Final Approval - 08/13/2025

Pharr
Development Services

MEMORANDUM

DATE: MONDAY, AUGUST 18, 2025

TO: MAYOR AND CITY COMMISSION

FROM: KIMBERLY MENDOZA, DIRECTOR OF DEVELOPMENT SERVICES

THROUGH: JONATHAN FLORES, CITY MANAGER

SUBJECT: CONDITIONAL USE PERMIT AND LATE HOURS PERMIT **RENEWAL** FOR ABC – FILE NO. **CUP#160736**
(MACUMBA PARADISE LLC, D/B/A LA CABAÑA SINALOENSE)

GENERAL INFORMATION:

APPLICANT: Macumba Paradise, LLC., d/b/a La Cabaña Sinaloense, is requesting renewal of the Conditional Use Permit and Late Hours Permit to allow the sale of alcoholic beverages for on-premise consumption in a General Business District (C).

LEGAL DESCRIPTION: The property is legally described as being Lot 97, Kelly-Pharr Subdivision, Pharr, Hidalgo County, Texas.

LOCATION: The property is physically located at 1209 East Nolana Loop.

ZONING: The property is currently zoned General Business District (C). The property to the north is zoned Single-Family Residential District (R-1) and General Business District (C) to the east, south, and west. The area is generally designated for commercial use in the Land Use Plan.

COMMENTS:

POLICE CHIEF: Recommends approval of the Conditional Use Permit.

FIRE DEPARTMENT: Recommends approval of the Conditional Use Permit.

CODE COMPLIANCE: Recommends approval of the Conditional Use Permit.

HEALTH: Recommends approval of the Conditional Use Permit.

DEVELOPMENT SERVICES: Recommends approval of the Conditional Use Permit.

DEVELOPMENT SERVICES RECOMMENDATIONS: Development Services recommends **approval** of the renewal request for the Conditional Use Permit and Late Hours Permit to allow the sale of alcoholic beverages for on-premise consumption in a General Business District (C) subject to site and applicant being in compliance with all City Ordinances and City Department requirements.

Executive Summary Letter

August 18, 2025

Conditional Use Permit **Renewal** for ABC – Macumba Paradise, LLC, d/b/a La Cabaña Sinaloense,

Background:

Macumba Paradise, LLC., d/b/a La Cabaña Sinaloense, is requesting renewal of the Conditional Use Permit and Late Hours Permit to allow the sale of alcoholic beverages for on-premise consumption. This request constitutes the 7th renewal for Macumba Paradise.

The property is located at 1209 East Nolana Loop. It is zoned General Business District (C) and is in conformance with the Future Land Use Plan. All required inspections have been conducted and have passed.

Recommendations:

Staff recommends **approval** of the renewal request for the Conditional Use Permit and Late Hours Permit to allow the sale of alcoholic beverage for on-premise consumption subject to the site and applicant being in compliance with all City Ordinances and City Department requirements.

CUP Renewal
1209 E NOLANA LOOP
MACUMBA PARADISE LLC d/b/a
LA CABANA SINALOENSE

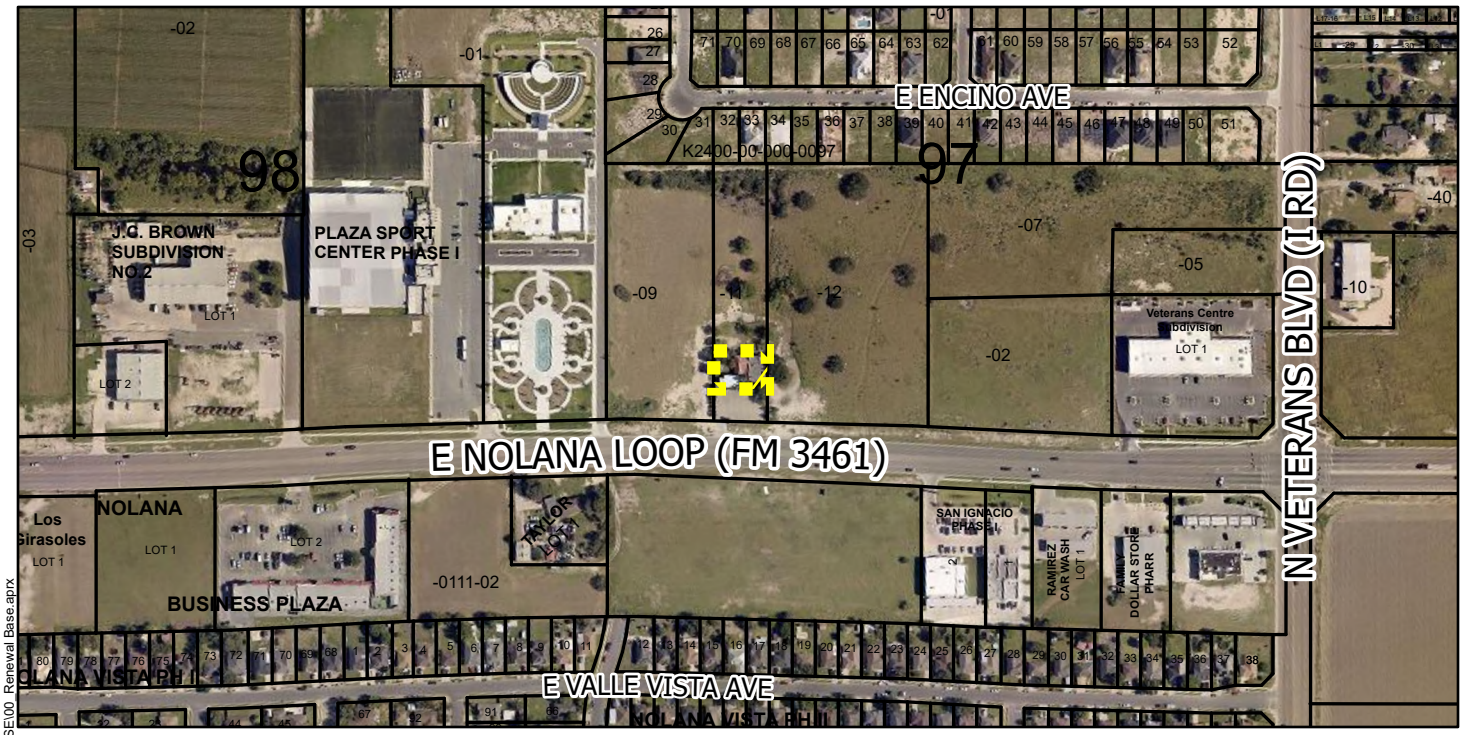

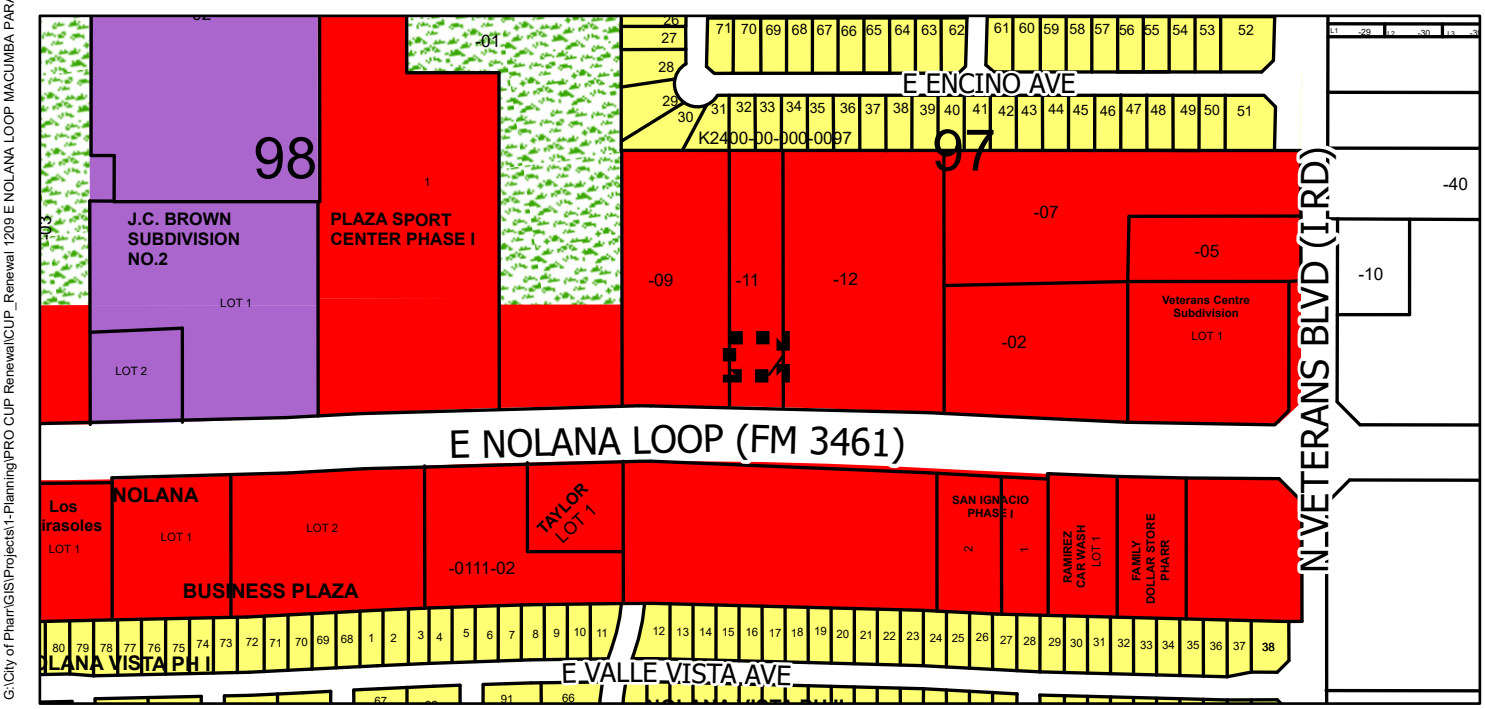

G:\City of Pharr\GIS\Projects\1-Planning\PRO CUP Renewal\CUP_Renewal 1209 E NOLANA LOOP MACUMBA PARADISE\00_Renewal Base.aprx

- Agricultural Open Space
- Single Family
- Single Family Small Lot
- Residential Multi-Family
- Residential Multi-Family High Density
- Mobile Home
- Townhouse
- HUD Code
- Rail Road R.O.W
- Government Owned
- General Business
- Business District
- Drainage Easement
- Heavy Commercial
- Heavy Industrial
- Limited Industrial
- Neighborhood Commercial
- Office Professional
- PSJA ISD
- Hidalgo ISD
- Valley View ISD
- Planned Unit Development

City of Pharr, Texas
Engineering Department
956.702.5355

Scale: 1:5,000

0 205 410 820 1,230 1,640 Feet

N W E S

Date: 8/11/2025

Pharr
Development Services

Site Photo

1209 East Nolana Loop

AGENDA MEMORANDUM

BOARD: BOARD OF COMMISSIONERS

AGENDA ITEM #: 5.H.9.
DATE SUBMITTED: August 13, 2025
MEETING DATE: August 18, 2025

FROM: Kimberly Mendoza, Development Services Director

DEPARTMENT: Development Services

DIRECTOR: Kimberly Mendoza

Agenda Item: 7-Eleven Inc. DBA 7-Eleven Convenience Store's and Stripes Stores, is requesting renewal of the Conditional Use Permit to allow the sale of alcoholic beverages for on-premise consumption. The property is legally described as being all of Lot "A", Cordova Estates, an addition to the City of Pharr, Hidalgo County, Texas. The property's physical address is 1510 West Military Highway. CUP#24013 **This item supports EV - Economic Vitality.**

Classification: Regular
(* If closed session, City Attorney must review and approve.)

Issue: 7-Eleven Inc. DBA 7-Eleven Convenience Store's and Stripes Stores, is requesting renewal of the Conditional Use Permit to allow the sale of alcoholic beverages for on-premise consumption in a General Business District (C). This request constitutes the 1st renewal for 7- Eleven Convenience Store's and Stripes Stores.

Fiscal Consideration: N/A

Staff Recommendation: Development Services recommends approval of the renewal request for the Conditional Use Permit to allow the sale of alcoholic beverages for on-premise consumption in a General Business District (C) subject to the site and applicant being in compliance with all City Ordinances and City Department requirements.

Alternatives: N/A

Exclude Material from Public Packet? No
Reason: N/A

ROUTING:

Kimberly Mendoza	Created/Initiated - 08/13/2025
Ricardo Rodriguez	Approved - 08/13/2025
David Friedlein	Approved - 08/13/2025
City Management Office	Final Approval - 08/13/2025

Pharr
Development Services

MEMORANDUM

DATE: MONDAY, AUGUST 18, 2025

TO: MAYOR AND CITY COMMISSION

FROM: KIMBERLY MENDOZA, DIRECTOR OF DEVELOPMENT SERVICES

THROUGH: JONATHAN FLORES, CITY MANAGER

SUBJECT: CONDITIONAL USE PERMIT **RENEWAL** FOR ABC –
FILE NO. **CUP#240613**
(7-ELEVEN CONVENIENCE STORE'S AND STRIPES STORES)

GENERAL INFORMATION:

APPLICANT: 7-Eleven Inc. DBA 7-Eleven Convenience Store's and Stripes Stores, is requesting renewal of the Conditional Use Permit to allow the sale of alcoholic beverages for on-premise consumption in a General Business District (C).

LEGAL DESCRIPTION: The property is legally described as being All of Lot "A", Cordova Estates, an addition to the City of Pharr, Hidalgo County, Texas.

LOCATION: The property's physical address is 1510 West Military Highway.

ZONING: The property is currently zoned General Business District (C). The property to the north is zoned Limited Industrial District (L-I) Heavy Commercial District (H-C) to the south and Agricultural and/or Open Space District (A-O) to the east. The city limits lie to the west. The area is generally designated for commercial use in the Land Use Plan.

COMMENTS:	**POLICE CHIEF:**	Recommends approval of the Conditional Use Permit.
	FIRE DEPARTMENT:	Recommends approval of the Conditional Use Permit.
	CODE COMPLIANCE:	Recommends approval of the Conditional Use Permit.
	HEALTH:	Recommends approval of the Conditional Use Permit.
	DEVELOPMENT SERVICES:	Recommends approval of the Conditional Use Permit.
DEVELOPMENT SERVICES RECOMMENDATIONS:		Development Services recommends **approval** of the renewal request for the Conditional Use Permit to allow the sale of alcoholic beverages for on-premise consumption in a General Business District (C) subject to the site and applicant being in compliance with all City Ordinances and City Department requirements.

Executive Summary Letter

August 18, 2025

Conditional Use Permit **Renewal** for ABC – 7-Eleven Convenience Store's and Stripes Stores

Background:

7-Eleven Inc. DBA 7-Eleven Convenience Store's and Stripes Stores, is requesting renewal of the Conditional Use Permit to allow the sale of alcoholic beverage for on-premise consumption. This request constitutes the 1st renewal for 7- Eleven Convenience Store's and Stripes Stores.

The property is located at 1510 West Military Highway. It is zoned General Business District (C) and is in conformance with the Future Land Use Plan. All required inspections have been conducted and have passed.

Recommendations:

Staff recommends **approval** of the renewal request for the Conditional Use Permit to allow the sale of alcoholic beverages for on-premise consumption subject to the site and applicant being in compliance with all City Ordinances and City Department requirements.

CUP RENEWAL
1510 W MILITARY
7-ELEVEN/TIMOTHY ILAOA

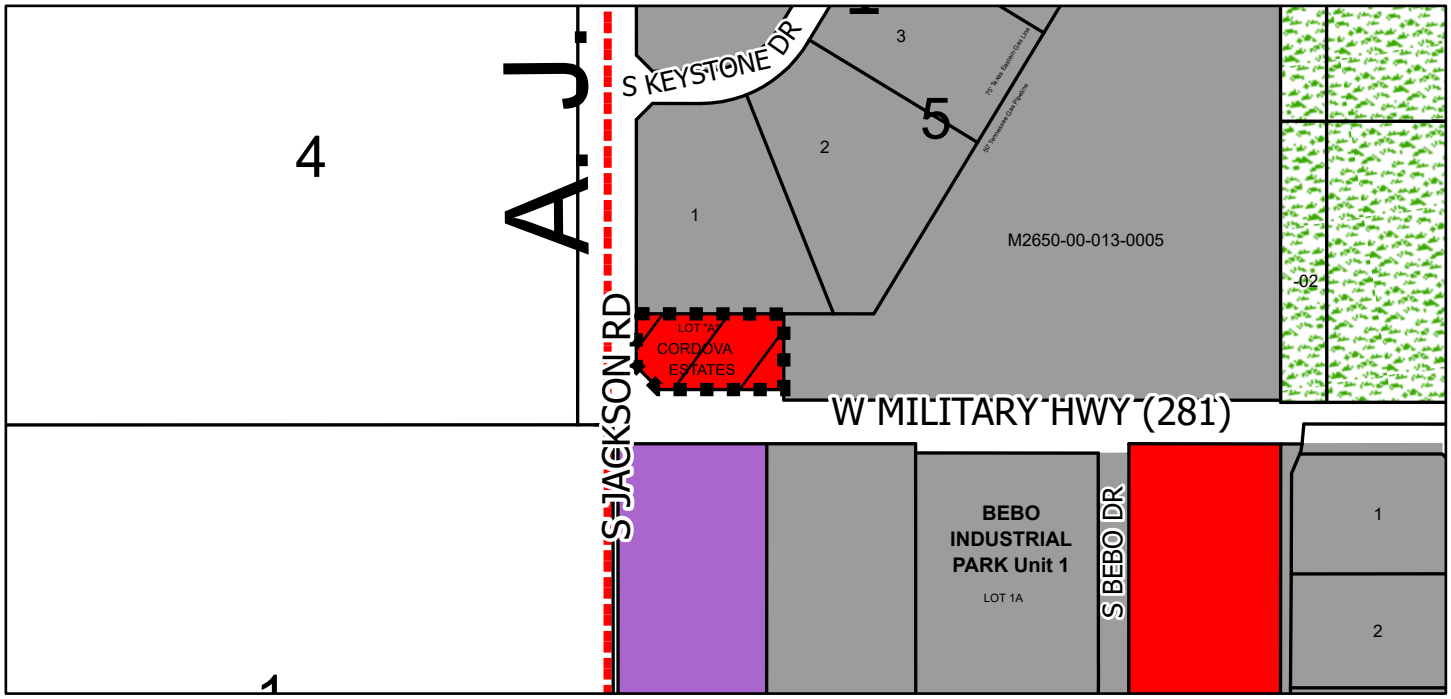

G:\City of Pharr\GIS\Projects\1-Planning\PRO CUP Renewal\CUP_RENEWAL 1510 W MILITARY 7-ELEVEN LOT A,CORDOVA ESTATES, AN ADDITION TO THE CITY OF PHARR\00_Renewal Base.aprx

- Subject Property
- Agricultural Open Space
- Single Family
- Single Family Small Lot
- Residential Multi-Family
- Residential Multi-Family High Density
- Mobile Home
- Townhouse
- HUD Code
- Rail Road R.O.W
- Government Owned
- General Business
- Business District
- Drainage Easement
- Heavy Commercial
- Heavy Industrial
- Limited Industrial
- Neighborhood Commercial
- Office Professional
- PSJA ISD
- Hidalgo ISD
- Valley View ISD
- Planned Unit Development

City of Pharr, Texas
Engineering Department
956.402.4221

Scale: 1:5,000

0 205 410 820 1,230 1,640 Feet

N W E S

Date: 8/11/2025

Pharr
Development Services

Site Photo

1510 West Military Highway

AGENDA MEMORANDUM

BOARD: BOARD OF COMMISSIONERS

AGENDA ITEM #: 6.A.
DATE SUBMITTED: August 11, 2025
MEETING DATE: August 18, 2025

FROM: Imelda Perez, City Clerk

DEPARTMENT: Administration

DIRECTOR: Jonathan Flores

Agenda Item: Consideration and action, if any, on Resolution appointing/re-appointing six (6) members to the Tax Increment Reinvestment Zone No. 1. **This item supports SG - Sound Governance and Fiscal Sustainability.**

Classification: Regular
(* If closed session, City Attorney must review and approve.)

Issue: The terms for Ambrosio Hernandez, Ricardo Medina, Daniel Chavez, Michael Pacheco, Arnoldo Flores and Roy Garcia expired on June 7, 2025. **This item supports SG - Sound Governance and Fiscal Sustainability.**

Fiscal Consideration: N/A

Staff Recommendation: Staff recommends appointment/re-appointment of members.

Alternatives: N/A

Exclude Material from Public Packet? No
Reason: N/A

ROUTING:

Imelda Perez	Created/Initiated - 08/11/2025
Ricardo Rodriguez	Approved - 08/11/2025
City Management Office	Final Approval - 08/11/2025

RESOLUTION NO. R-2025-__

A RESOLUTION APPOINTING/RE-APPOINTING BOARD OF DIRECTORS FOR THE TAX INCREMENT REINVESTMENT ZONE NUMBER ONE

WHEREAS, the City of Commission adopted Ordinance O-2011-46, which created a Board of Directors for the Tax Increment Reinvestment Zone Number One consisting of not less than five (5) and not more than fifteen (15) members; and

WHEREAS, members of said board shall serve a two (2) year term; and

WHEREAS, the terms of Ambrosio Hernandez, Ricardo Medina, Daniel Chavez, and Micheal Pacheco will expire on June 7, 2025; and

WHEREAS, one (2) members need to be appointed at this time.

NOW, THEREFORE, BE IT RESOLVED BY THE BOARD OF COMMISSIONERS OF THE CITY OF PHARR, TEXAS, that the following members are hereby appointed.

NAME:	**LENGTH OF TERM:**
1. _____	2-Year Term (expiring June 7, 2027)
2. _____	2-Year Term (expiring June 7, 2027)
3. _____	2-Year Term (expiring June 7, 2027)
4. _____	2-Year Term (expiring June 7, 2027)
5. _____	Hidalgo County Representative
6. _____	Alternate Hidalgo County Representative

PASSED AND APPROVED THIS 18th DAY OF AUGUST 2025, BY THE BOARD OF COMMISSIONERS OF THE CITY OF PHARR, TEXAS.

CITY OF PHARR

_____
Ambrosio Hernandez, Mayor

ATTEST

_____
Imelda Perez, City Clerk

AGENDA MEMORANDUM

BOARD: BOARD OF COMMISSIONERS

AGENDA ITEM #: 6.B.
DATE SUBMITTED: August 11, 2025
MEETING DATE: August 18, 2025

FROM: Imelda Perez, City Clerk

DEPARTMENT: Administration

DIRECTOR: Jonathan Flores

Agenda Item: Consideration and action, if any, on Resolution appointing/re-appointing six (6) members to the Tax Increment Reinvestment Zone No. 2. **This item supports SG - Sound Governance and Fiscal Sustainability.**

Classification: Regular
(* If closed session, City Attorney must review and approve.)

Issue: The terms for Ambrosio Hernandez, Ricardo Medina, Daniel Chavez, Michael Pacheco, Arnoldo Fores and Roy Garcia expired June 7, 2025.

Fiscal Consideration: N/A

Staff Recommendation: Staff recommends appointment/re-appointment of members.

Alternatives: N/A

Exclude Material from Public Packet? No
Reason: N/A

ROUTING:

Imelda Perez	Created/Initiated - 08/11/2025
Ricardo Rodriguez	Approved - 08/11/2025
City Management Office	Final Approval - 08/11/2025

RESOLUTION NO. R-2025-__

A RESOLUTION APPOINTING/RE-APPOINTING BOARD OF DIRECTORS FOR THE TAX INCREMENT REINVESTMENT ZONE NUMBER TWO

WHEREAS, the City of Commission adopted Ordinance O-2015-52, which created a Board of Directors for the Tax Increment Reinvestment Zone Number Two consisting of not less than five (5) and not more than fifteen (15) members; and

WHEREAS, members of said board shall serve a two (2) year term; and

WHEREAS, the terms of Ambrosio Hernandez, Ricardo Medina, Daniel Chavez, and Micheal Pacheco will expire on June 7, 2025; and

WHEREAS, one (2) members need to be appointed at this time.

NOW, THEREFORE, BE IT RESOLVED BY THE BOARD OF COMMISSIONERS OF THE CITY OF PHARR, TEXAS, that the following members are hereby appointed.

NAME:	**LENGTH OF TERM:**
1. _____	2-Year Term (expiring June 7, 2027)
2. _____	2-Year Term (expiring June 7, 2027)
3. _____	2-Year Term (expiring June 7, 2027)
4. _____	2-Year Term (expiring June 7, 2027)
5. _____	Hidalgo County Representative
6. _____	Alternate Hidalgo County Representative

PASSED AND APPROVED THIS 18th DAY OF AUGUST 2025, BY THE BOARD OF COMMISSIONERS OF THE CITY OF PHARR, TEXAS.

CITY OF PHARR

_____
Ambrosio Hernandez, Mayor

ATTEST

_____
Imelda Perez, City Clerk

AGENDA MEMORANDUM

BOARD: BOARD OF COMMISSIONERS

AGENDA ITEM #: 6.C.
DATE SUBMITTED: August 11, 2025
MEETING DATE: August 18, 2025

FROM: Imelda Perez, City Clerk

DEPARTMENT: Administration

DIRECTOR: Jonathan Flores

Agenda Item: Consideration and action, if any, on Resolution appointing/re-appointing seven (7) members to the Pharr Public Facilities Corporation #3. **This item supports SG - Sound Governance and Fiscal Sustainability.**

Classification: Regular
(* If closed session, City Attorney must review and approve.)

Issue: The terms of Ambrosio Hernandez, Roberto “Bobby” Carrillo, Ramiro Caballero, Daniel Chavez, Ricardo Medina, Michael Pacheco and Itza Flores expired on August 2, 2025.

Fiscal Consideration: N/A

Staff Recommendation: Staff recommends appointment/re-appointment of members.

Alternatives: N/A

Exclude Material from Public Packet? No
Reason: N/A

ROUTING:

Imelda Perez	Created/Initiated - 08/11/2025
Ricardo Rodriguez	Approved - 08/11/2025
City Management Office	Final Approval - 08/11/2025

STATE OF TEXAS	**§**	**RESOLUTION**
COUNTY OF HIDALGO	**§**	**NO. R-2025-___**
CITY OF PHARR	**§**	

WHEREAS, Resolution No. R-2011-86 authorized and crated the Pharr Public Facilities Corporation #3 pursuant to Chapter 303 of the Texas Local Government Code; and

WHEREAS, in accordance with the Article Seven of the Bylaws of Incorporation, the Pharr Public Facilities Corporation #3 shall be composed of seven (7) members, all of whom shall be members of the Governing Body and shall serve for a term of two (2) years; and

WHEREAS, the terms of Ambrosio Hernandez, Roberto "Bobby" Carrillo, Ramiro Caballero, Daniel Chavez, Ricardo Medina, Michael Pacheco and Itza Flores expired on August 2, 2025; and

WHEREAS, seven (7) members need to be appointed/re-appointed.

NOW, THEREFORE, BE IT RESOLVED BY THE BOARD OF COMMISSIONERS OF THE CITY OF PHARR, TEXAS:

That the following persons are hereby appointed to the Board of Directors of the Pharr Public Facilities Corporation #3:

NAME:	LENGTH OF TERM:
Ambrosio Hernandez	2-Year Term (expiring August 2, 2027)
Michael Pacheco	2-Year Term (expiring August 2, 2027)
Roberto "Bobby" Carrillo	2-Year Term (expiring August 2, 2027)
Daniel Chavez	2-Year Term (expiring August 2, 2027)
Ramiro Caballero	2-Year Term (expiring August 2, 2027)
Ricardo Medina	2-Year Term (expiring August 2, 2027)
Itza Flores	2-Year Term (expiring August 2, 2027)

APPROVED AND ADOPTED BY THE BOARD OF COMMISSIONERS OF THE CITY OF PHARR, TEXAS, on this the 18th day of August, 2025.

CITY OF PHARR

_____
AMBROSIO HERNANDEZ
MAYOR

ATTEST:

_____
IMELDA PEREZ, CITY CLERK

AGENDA MEMORANDUM

BOARD: BOARD OF COMMISSIONERS

AGENDA ITEM #: 6.D.
DATE SUBMITTED: August 14, 2025
MEETING DATE: August 18, 2025

FROM: Kimberly Mendoza, Development Services Director

DEPARTMENT: Development Services

DIRECTOR: Kimberly Mendoza

Agenda Item: Consideration and action, if any, on Resolution appointing/reappointing two (2) regular members and one (1) alternate member to the Planning and Zoning Commission. **This item supports SG - Sound Governance and Fiscal Sustainability.**

Classification: Regular
(* If closed session, City Attorney must review and approve.)

Issue: The terms of regular members Danny Wylie and Ruben Luna will expire on September 15, 2025, and both have expressed interest in being reappointed. The term of alternate member Roberto Carrillo, Jr. will also expire on September 15, 2025, and he has expressed interest in reappointment.

Fiscal Consideration: N/A

Staff Recommendation: Staff recommends the reappointment of Danny Wylie and Ruben Luna as regular members and Roberto Carrillo, Jr. as an alternate member to the Planning and Zoning Commission.

Alternatives: N/A

Exclude Material from Public Packet? No
Reason: N/A

ROUTING:

Kimberly Mendoza	Created/Initiated - 08/14/2025
Ricardo Rodriguez	Approved - 08/15/2025
David Friedlein	Approved - 08/15/2025
City Management Office	Final Approval - 08/15/2025

STATE OF TEXAS §
§ **RESOLUTION NO. R-2025-___**
CITY OF PHARR §

WHEREAS, there is hereby a City Planning and Zoning Commission which shall function by making plans and acting as a Zoning Commission being composed of seven (7) members and four (4) alternates to be appointed by the Board of Commissioners, and

WHEREAS, the terms of regular members Danny Wylie and Ruben Luna expire on September 15, 2025; and

WHEREAS, the term of alternate member Roberto Carrillo, Jr. expires on September 15, 2025; and

WHEREAS, appointment of two (2) regular members and one (1) alternate member needs to be made at this time in accordance with City Ordinance No. O-2023-42 whereby a person, either citizen/resident or Pharr business owner, shall not serve as an officer or member on more than three (3) Pharr boards or committees concurrently.

NOW, THEREFORE, BE IT RESOLVED BY THE BOARD OF COMMISSIONERS OF THE CITY OF PHARR, TEXAS, THAT:

The following residents of the City of Pharr are hereby appointed as members of the Planning and Zoning Commission.

NAME:	**LENGTH OF TERM**
1. _____	2-year term (expiring 09/15/27)
2. _____	2-year term (expiring 09/15/27)
3. _____	2-year term (expiring 09/15/27)

PASSED, APPROVED AND MADE EFFECTIVE BY THE BOARD OF COMMISSIONERS OF THE CITY OF PHARR, TEXAS, on this the 18th day of August, 2025.

CITY OF PHARR

_____
AMBROSIO HERNANDEZ, MAYOR

ATTEST:

_____
IMELDA PEREZ, CITY CLERK

AGENDA MEMORANDUM

BOARD: BOARD OF COMMISSIONERS

AGENDA ITEM #: 7.A.
DATE SUBMITTED: August 15, 2025
MEETING DATE: August 18, 2025

FROM: Jamison Merrick, Finance Director

DEPARTMENT: Finance

DIRECTOR: Jamison Merrick

Agenda Item: Discussion and action for vote on Proposed Tax Rate increase and schedule a Public Hearing. **This item supports SG - Sound Governance and Fiscal Sustainability.**

Classification: Regular
(* If closed session, City Attorney must review and approve.)

Issue: Texas requires all municipalities to hold a public hearing whenever the proposed tax rate exceeds the no-new tax revenue rate. See Notice Attached. A Record vote has to be taken and the City has to announce the date of public hearing.

Fiscal Consideration: N/A

Staff Recommendation: To approve the *proposed* tax rate and schedule public hearings as follows:

September 15th, 2025 at 4:00 p.m.

Alternatives: N/A

Exclude Material from Public Packet? No
Reason: N/A

ROUTING:

Jamison Merrick	Created/Initiated - 08/15/2025
Jamison Merrick	Approved - 08/15/2025
Ricardo Rodriguez	Approved - 08/15/2025
Jamison Merrick	Approved - 08/15/2025
City Management Office	Final Approval - 08/15/2025

NOTICE OF PUBLIC HEARING ON TAX INCREASE FOR 2025 TAX YEAR FOR CITY OF PHARR

A tax rate of $0.7676 per $100 valuation has been proposed for adoption by the governing body of City of Pharr.

PROPOSED TAX RATE	$0.7676	per $100
NO-NEW TAX REVENUE RATE	$0.7248	per $100
VOTER APPROVAL RATE	$0.8370	per $100

The no-new revenue tax rate is the tax rate for the 2025 tax year that will raise the same amount of property tax revenue for City of Pharr from the same properties in both the 2025 tax year and the 2026 tax year.

The voter approval rate is the highest tax rate that City of Pharr may adopt without holding an election to seek voter approval rate.

The proposed tax rate is greater than the no-new revenue tax rate. This means that City of Pharr is proposing to increase property taxes for the 2025 tax year.

A PUBLIC HEARING ON THE PROPOSED TAX INCREASE RATE WILL BE HELD ON September 15th, 2025, at 4:00 p.m., at City of Pharr 118 C. Cage Blvd. Pharr, TX 78577. Second Floor Commissioners' room.

The proposed tax rate is not greater than the voter-approval tax rate. As a result, City of Pharr is not required to hold an election at which voters may accept or reject the proposed tax rate. However, you may express your support for or the opposition to the proposed tax rate by contacting the City Manager's Office of the City of Pharr at their offices or by attending the public hearing mentioned.

YOUR TAX OWED UNDER ANY OF THE ABOVE RATES CAN BE CALCULATED AS FOLLOWS:

Property tax amount= (rate) x (taxable value of your property)/100

FOR the proposal:
AGAINTS the proposal:
PRESENT and not voting:
ABSENT:

The 86th Legislature modified the manner in which the voter-approval rate is calculated to limit the rate of growth of property taxes in the state.

The following table compares the taxes imposed on the average residence homestead by City of Pharr last year to the taxes proposed to be imposed on the average residence homestead by City of Pharr this year.

	2025	2024	Change
Total Tax Rate (Per $100 of Value)	0.7676	0.7676	0.0%
Average Homestead Taxable Value	$148,771	$140,441	5.9%
Tax on Average Homestead	$1,142	$1,078	$64
Total Tax Levy on All Properties	$34,817,654	$32,683,395	6.5%

For assistance or detailed information about tax calculations, please contact:

Pablo (Paul) Villarreal, Jr.
City of Pharr Tax Assessor-Collector
2804 S Business Hwy 2281
Edinburg, TX 78539 (956) 318-2157

propertytax@hidalgocountytax.org

http://www.hidalgocountytax.org

AGENDA MEMORANDUM

BOARD: BOARD OF COMMISSIONERS

AGENDA ITEM #: 7.B.
DATE SUBMITTED: August 15, 2025
MEETING DATE: August 18, 2025

FROM: Jamison Merrick, Finance Director

DEPARTMENT: Finance

DIRECTOR: Jamison Merrick

Agenda Item: Submission of Certified Totals for Tax Assessed Values 2025 for Fiscal Year 2025-2026. **This item supports SG - Sound Governance and Fiscal Sustainability.**

Classification: Regular
(* If closed session, City Attorney must review and approve.)

Issue: Hidalgo County finalized the City of Pharr Property Assessment Value for Tax Year 2025 on July 18, 2025.

The total Net Taxable Value for 2025 is: $4,535,911,193 or $4.536 billion (rounded), which represents an increase of 2.85% compared to last year.

Refer to attached report.

Fiscal Consideration: N/A

Staff Recommendation: Presentation Only.

Alternatives: N/A

Exclude Material from Public Packet? No
Reason: N/A

ROUTING:

Jamison Merrick	Created/Initiated - 08/15/2025
Jamison Merrick	Approved - 08/15/2025
Ricardo Rodriguez	Approved - 08/15/2025
Jamison Merrick	Approved - 08/15/2025
City Management Office	Final Approval - 08/15/2025

CITY OF PHARR

	NOT UNDER REVIEW	UNDER REVIEW	TOTAL
REAL PROPERTY & MFT HOMES	(Count) (25,543)	(Count) (766)	(Count) (26,309)
Land HS Value	604,540,182	22,524,145	627,064,327
Land NHS Value	1,512,724,988	21,662,391	1,534,387,379
Land Ag Market Value	153,871,775	113,430	153,985,205
Land Timber Market Value	0	0	0
Total Land Value	**2,271,136,945**	**44,299,966**	**2,315,436,911**
Improvement HS Value	1,396,444,479	58,664,959	1,455,109,438
Improvement NHS Value	2,528,605,928	35,132,954	2,563,738,882
Total Improvement	**3,925,050,407**	**93,797,913**	**4,018,848,320**
Market Value	**6,196,187,352**	**138,097,879**	**6,334,285,231**
BUSINESS PERSONAL PROPERTY	(2,355)	(2)	(2,357)
Market Value	**669,855,977**	**140,933**	**669,996,910**
OIL & GAS / MINERALS	(272)	(0)	(272)
Market Value	**1,204,300**	**0**	**1,204,300**
OTHER (Intangibles)	(0)	(0)	(0)
Market Value	**0**	**0**	**0**
	(Total Count) (28,170)	(Total Count) (768)	(Total Count) (28,938)
TOTAL MARKET	**6,867,247,629**	**138,238,812**	**7,005,486,441**
Ag Productivity	921,935	177	922,112
Ag Loss (-)	152,949,840	113,253	153,063,093
Timber Productivity	0	0	0
Timber Loss (-)	0	0	0
APPRAISED VALUE	**6,714,297,789**	**138,125,559**	**6,852,423,348**
	97.9%	2.1%	100.0%
HS CAP Limitation Value (-)	266,631,477	12,149,213	278,780,690
CB CAP Limitation Value (-)	113,810,062	4,836,528	118,646,590
NET APPRAISED VALUE	**6,333,856,250**	**121,139,818**	**6,454,996,068**
Total Exemption Amount	1,017,944,615	1,861,968	1,019,806,583
NET TAXABLE	**5,315,911,635**	**119,277,850**	**5,435,189,485**
TAX LIMIT/FREEZE ADJUSTMENT	**493,348,265**	**11,901,750**	**505,250,015**
LIMIT ADJ TAXABLE (I&S)	**4,822,563,370**	**107,376,100**	**4,929,939,470**
CHAPTER 312 ADJUSTMENT	**0**	**0**	**0**
CHAPTER 313 ADJUSTMENT	**0**	**0**	**0**
LIMIT ADJ TAXABLE (M&O)	**4,822,563,370**	**107,376,100**	**4,929,939,470**

APPROX TOTAL LEVY = LIMIT ADJ TAXABLE * (TAX RATE / 100) + ACTUAL TAX

$39,973,529.39 = 4,929,939,470 * (0.767600 / 100) + $2,131,314.02

CITY OF PHARR

Tax Limit Adjustment Breakdown

(Freeze)

NOT UNDER REVIEW

Limitation	Net Appr	Taxable	Act Tax	Ceiling	Count
DP	34,070,630	32,582,160	140,260.98	144,792.47	303
DPS	403,688	403,688	2,068.12	2,068.12	3
OV65	496,862,258	434,210,129	1,849,821.67	1,886,257.31	4,292
OV65S	31,775,396	26,152,288	82,761.09	982,018.64	284
Total	563,111,972	493,348,265	2,074,911.86	3,015,136.54	4,882

Tax Rate: 0.767600

UNDER REVIEW

Limitation	Net Appr	Taxable	Act Tax	Ceiling	Count
DP	1,067,667	1,067,667	5,537.56	5,537.56	8
OV65	10,337,325	9,607,325	46,276.67	46,276.67	73
OV65S	1,346,758	1,226,758	4,587.93	4,587.93	12
Total	12,751,750	11,901,750	56,402.16	56,402.16	93

Tax Rate: 0.767600

TOTAL

Limitation	Net Appr	Taxable	Act Tax	Ceiling	Count
DP	35,138,297	33,649,827	145,798.54	150,330.03	311
DPS	403,688	403,688	2,068.12	2,068.12	3
OV65	507,199,583	443,817,454	1,896,098.34	1,932,533.98	4,365
OV65S	33,122,154	27,379,046	87,349.02	986,606.57	296
Total	575,863,722	505,250,015	2,131,314.02	3,071,538.7	4,975

Tax Rate: 0.767600

CITY OF PHARR

Exemptions

EXEMPTIONS	NOT UNDER REVIEW		UNDER REVIEW		TOTAL	
Exemption	Total	Count	Total	Count	Total	Count
Homestead Exemptions						
OV65-Local	44,813,182	4,619	810,000	81	45,623,182	4,700
OV65-State	0	0	0	0	0	0
OV65-Prorated	8,986	1	0	0	8,986	1
OV65S-Local	2,680,000	284	120,000	12	2,800,000	296
OV65S-State	0	0	0	0	0	0
OV65S-Prorated	0	0	0	0	0	0
DP-Local	0	0	0	0	0	0
DP-State	0	0	0	0	0	0
DP-Prorated	0	0	0	0	0	0
DPS-Local	0	0	0	0	0	0
DPS-State	0	0	0	0	0	0
DPS-Prorated	0	0	0	0	0	0
DVHS	44,510,693	207	557,687	3	45,068,380	210
DVHS-Prorated	1,628,347	9	0	0	1,628,347	9
DVHSS	4,791,653	30	0	0	4,791,653	30
DVHSS-Prorated	0	0	0	0	0	0
FRSS	184,111	1	0	0	184,111	1
Subtotal for Homestead Exemptions	**98,616,972**	**5,151**	**1,487,687**	**96**	**100,104,659**	**5,247**
Disabled Veterans Exemptions						
DV1	788,000	75	5,000	1	793,000	76
DV1S	10,000	2	0	0	10,000	2
DV2	384,000	38	12,000	1	396,000	39
DV2S	15,000	2	0	0	15,000	2
DV3	464,000	42	10,000	1	474,000	43
DV3S	20,000	2	0	0	20,000	2
DV4	1,478,947	125	84,000	7	1,562,947	132
DV4S	264,000	22	0	0	264,000	22
Subtotal for Disabled Veterans Exemptions	**3,423,947**	**308**	**111,000**	**10**	**3,534,947**	**318**
Special Exemptions						
Charitable Org	0	0	79,485	1	79,485	1
EX-11.35 1	89,155	6	18,048	1	107,203	7
EX-11.35 1 PRORATED	0	0	0	0	0	0
EX-11.35 2	122,328	6	0	0	122,328	6
EX-11.35 2 PRORATED	0	0	0	0	0	0
FR	80,450,404	30	0	0	80,450,404	30
PC	213,199	1	0	0	213,199	1
SO	37,013	2	0	0	37,013	2
Subtotal for Special Exemptions	**80,912,099**	**45**	**97,533**	**2**	**81,009,632**	**47**

CITY OF PHARR

Exemptions

EXEMPTIONS	NOT UNDER REVIEW		UNDER REVIEW		TOTAL	
Exemption	Total	Count	Total	Count	Total	Count
Absolute Exemptions						
EX	9,127,571	1	0	0	9,127,571	1
EX-Prorated	0	0	0	0	0	0
Exempt UD	58,956	13	0	0	58,956	13
EX-XU	665,891	2	0	0	665,891	2
EX-XU-PRORATED	0	0	0	0	0	0
EX-XV	824,941,379	628	165,748	1	825,107,127	629
EX-XV-PRORATED	0	0	0	0	0	0
EX366	197,800	140	0	0	197,800	140
Subtotal for Absolute Exemptions	**834,991,597**	**784**	**165,748**	**1**	**835,157,345**	**785**
Total:	**1,017,944,615**	**6,288**	**1,861,968**	**109**	**1,019,806,583**	**6,397**

New Value

Total New Market Value: $120,474,184

Total New Taxable Value: $120,139,068

JETI

New Market Value: $0

New Taxable Value: $0

Chapter 313

New Market Value: $0

New Taxable Value: $0

Exemption Loss

New Absolute Exemptions

Exemption	Description	Count	Last Year Market Value
EX-11.35 1	Level 1 Damage Assessment Rating	7	952,067
EX-11.35 2	Level II Damage Assessment Rating	6	896,568
EX-XV	Other Exemptions (including public property, reli...	6	1,019,261
Absolute Exemption Value Loss:		**19**	**2,867,896**

New Partial Exemptions

Exemption	Description	Count	Partial Exemption Amt
CHODO	11.182 Community Housing Development Organi...	1	79,485
DP	Disability	5	0
DPS	DISABLED Surviving Spouse	1	0
DV1	Disabled Veterans 10% - 29%	3	36,000
DV2	Disabled Veterans 30% - 49%	5	51,000
DV3	Disabled Veterans 50% - 69%	1	10,000
DV4	Disabled Veterans 70% - 100%	4	48,000
DVHS	Disabled Veteran Homestead	12	2,367,298
FR	FREEPORT	26	73,363,525
OV65	Over 65	64	604,021
OV65S	OV65 Surviving Spouse	11	110,000
PC	Pollution Control (Special Exemption)	1	213,199
Partial Exemption Value Loss:		**134**	**76,882,528**
Total NEW Exemption Value			**79,750,424**

Increased Exemptions

Exemption	Description	Count	Increased Exemption Amt
Increased Exemption Value Loss:		**0**	**0**
Total Exemption Value Loss:			**79,750,424**

New Special Use (Ag/Timber)

Count	2024 Market Value	2025 Special Use	Loss
1	0	699	699

New Annexations/Deannexations

	Count	Market Value	Taxable Value
Annexations	1	5,067,291	5,067,291

Average Homestead Value

Category	Count of HS	Average Market	Average Exemption	Average Taxable
A Only	11,539	176,372	3,979	148,572
A & E	11,558	176,564	3,972	148,771

Property Under Review - Lower Value Used

Count	Market Value	Lower Market Value	Estimated Lower Taxable Value
768	138,238,812	106,547,864	93,649,951

CITY OF PHARR

State Category Breakdown

Not Under Review

Code	Description	Count	Acres	New Value	Market Value	Taxable Value
A	Single-family Residential	18,121		35,464,411	2,905,218,708	2,501,059,083
B	Multifamily Residential	1,223		31,041,552	545,189,316	534,548,560
C1	Vacant Lots and Tracts	1,735		0	192,003,939	183,518,684
D1	Qualified Open-Space Land	189	2,305.42	0	153,871,775	920,943
D2	Farm or Ranch Improvements on Qualified	10		0	49,360	49,161
E	Rural Land,Not Qualified for Open-Space Land	52		5,696	15,161,069	14,199,236
F1	Commercial Real Property	1,587		50,668,970	1,477,089,400	1,425,852,731
F2	Industrial Real Property	1		0	1,322,350	1,322,350
G1	Oil and Gas	249		0	1,142,150	1,042,493
J1	Water Systems	1		0	1,604	1,604
J2	Gas Distribution Systems	6		0	3,450,268	3,406,216
J3	Electric Companies (including Co-ops)	40		0	73,936,721	73,928,661
J4	Telephone Companies (including Co-ops)	18		0	4,240,122	3,845,399
J5	Railroads	4		0	86,960	86,960
J6	Pipelines	5		0	343,461	332,349
J7	Cable Companies	3		0	8,163,340	8,163,340
L1	Commercial Personal Property	1,962		0	530,426,976	450,432,525
L2	Industrial and Manufacturing Personal Property	90		0	7,368,784	6,662,619
M1	Mobile Homes	2,209		907,010	63,479,786	56,910,897
O	Residential Inventory	50		148,576	2,218,286	2,139,361
S	Special Inventory	99		0	47,488,463	47,488,463
XB	Income Producing Tangible Personal	140		0	197,800	0
XU	MiscellaneousExemptions (§11.23)	2		0	665,891	0
XV	Other Totally Exempt Properties (including	672		198,211	834,131,100	0
		Totals:	2,305.42	118,434,426	6,867,247,629	5,315,911,635

CITY OF PHARR

State Category Breakdown

Under Review

Code	Description	Count	Acres	New Value	Market Value	Taxable Value
A	Single-family Residential	666		1,046,721	118,656,423	101,599,056
B	Multifamily Residential	20		798,020	6,790,772	6,657,233
C1	Vacant Lots and Tracts	45		0	3,600,951	3,151,998
D1	Qualified Open-Space Land	1	00.47	0	113,430	177
F1	Commercial Real Property	38		11,131	8,520,898	7,489,967
L1	Commercial Personal Property	2		0	140,933	140,933
O	Residential Inventory	1		183,886	249,657	238,486
XV	Other Totally Exempt Properties (including	1		0	165,748	0
		Totals:	0.47	2,039,758	138,238,812	119,277,850

CITY OF PHARR

State Category Breakdown

Grand Totals

Code	Description	Count	Acres	New Value	Market Value	Taxable Value
A	Single-family Residential	18,787		36,511,132	3,023,875,131	2,602,658,139
B	Multifamily Residential	1,243		31,839,572	551,980,088	541,205,793
C1	Vacant Lots and Tracts	1,780		0	195,604,890	186,670,682
D1	Qualified Open-Space Land	190	2,305.89	0	153,985,205	921,120
D2	Farm or Ranch Improvements on Qualified	10		0	49,360	49,161
E	Rural Land,Not Qualified for Open-Space Land	52		5,696	15,161,069	14,199,236
F1	Commercial Real Property	1,625		50,680,101	1,485,610,298	1,433,342,698
F2	Industrial Real Property	1		0	1,322,350	1,322,350
G1	Oil and Gas	249		0	1,142,150	1,042,493
J1	Water Systems	1		0	1,604	1,604
J2	Gas Distribution Systems	6		0	3,450,268	3,406,216
J3	Electric Companies (including Co-ops)	40		0	73,936,721	73,928,661
J4	Telephone Companies (including Co-ops)	18		0	4,240,122	3,845,399
J5	Railroads	4		0	86,960	86,960
J6	Pipelines	5		0	343,461	332,349
J7	Cable Companies	3		0	8,163,340	8,163,340
L1	Commercial Personal Property	1,964		0	530,567,909	450,573,458
L2	Industrial and Manufacturing Personal Property	90		0	7,368,784	6,662,619
M1	Mobile Homes	2,209		907,010	63,479,786	56,910,897
O	Residential Inventory	51		332,462	2,467,943	2,377,847
S	Special Inventory	99		0	47,488,463	47,488,463
XB	Income Producing Tangible Personal	140		0	197,800	0
XU	MiscellaneousExemptions (§11.23)	2		0	665,891	0
XV	Other Totally Exempt Properties (including	673		198,211	834,296,848	0
		Totals:	2,305.89	120,474,184	7,005,486,441	5,435,189,485

CITY OF PHARR

Top Taxpayers

Rank	Owner ID	Taxpayer Name	Market Value	Taxable Value
1	934078	AEP TEXAS INC-27H	$66,605,500	$66,605,500
2	1155525	PTC TX HOLDINGS LLC	$63,079,809	$63,079,809
3	1154119	46TH STREET INVESTORS & PWIP LLC &	$40,725,125	$40,725,125
4	537928	HEB GROCERY COMPANY LP	$26,523,693	$26,310,494
5	1012296	PHARR BRIDGE INVESTMENT COMPANY	$19,768,185	$17,822,289
6	169148	WILDER CORPORATION OF DELAWARE	$18,798,560	$17,459,243
7	299908	RAY AUDIE E	$15,568,281	$15,389,075
8	954522	AEP TEXAS CENTRAL COMPANY	$15,611,704	$15,337,445
9	606207	FJRS INVESTMENTS LTD	$14,620,204	$14,620,204
10	1148056	BISSELL SOUTHWEST DC LEASING LLC	$14,844,688	$13,508,066
11	1277633	ECS-MCALLEN PROPCO LLC	$13,425,642	$13,425,642
12	980463	PENSKE TRUCK LEASING CO LP	$12,878,549	$12,878,549
13	992533	COSTCO WHOLESALE CORP	$12,658,566	$12,658,566
14	969271	COSTCO WHOLESALE CORP	$12,530,971	$12,530,971
15	1017776	TOYOTA OF PHARR SCION OF PHARR	$12,413,604	$12,413,604
16	1219225	BFI NEWCO HOLDINGS INC	$12,203,296	$12,203,296
17	1235264	OUTWESTERN LLC	$11,832,113	$11,832,113
18	1238045	TRAILS ON JACKSON LLC	$11,554,313	$11,554,313
19	1033508	CLARK KNAPP MOTOR CO LC	$11,345,525	$11,345,525
20	1265176	FRESENIUS MEDICAL CARE	$10,642,312	$10,642,312
		Total	$417,630,640	$412,342,141

CITY OF PHARR TAX INCREMENT

	NOT UNDER REVIEW	UNDER REVIEW	TOTAL
REAL PROPERTY & MFT HOMES	(Count) (256)	(Count) (1)	(Count) (257)
Land HS Value	1,001,785	68,750	1,070,535
Land NHS Value	82,706,883	0	82,706,883
Land Ag Market Value	56,765,289	0	56,765,289
Land Timber Market Value	0	0	0
Total Land Value	**140,473,957**	**68,750**	**140,542,707**
Improvement HS Value	1,789,182	416,151	2,205,333
Improvement NHS Value	206,235,541	0	206,235,541
Total Improvement	**208,024,723**	**416,151**	**208,440,874**
Market Value	**348,498,680**	**484,901**	**348,983,581**
BUSINESS PERSONAL PROPERTY	(0)	(0)	(0)
Market Value	**0**	**0**	**0**
OIL & GAS / MINERALS	(0)	(0)	(0)
Market Value	**0**	**0**	**0**
OTHER (Intangibles)	(0)	(0)	(0)
Market Value	**0**	**0**	**0**
	(Total Count) (256)	(Total Count) (1)	(Total Count) (257)
TOTAL MARKET	**348,498,680**	**484,901**	**348,983,581**
Ag Productivity	444,127	0	444,127
Ag Loss (-)	56,321,162	0	56,321,162
Timber Productivity	0	0	0
Timber Loss (-)	0	0	0
APPRAISED VALUE	**292,177,518**	**484,901**	**292,662,419**
	99.8%	0.2%	100.0%
HS CAP Limitation Value (-)	228,725	154,351	383,076
CB CAP Limitation Value (-)	10,124,244	0	10,124,244
NET APPRAISED VALUE	**281,824,549**	**330,550**	**282,155,099**
Total Exemption Amount	6,728,809	10,000	6,738,809
NET TAXABLE	**275,095,740**	**320,550**	**275,416,290**
TAX LIMIT/FREEZE ADJUSTMENT	**0**	**320,550**	**320,550**
LIMIT ADJ TAXABLE (I&S)	**275,095,740**	**0**	**275,095,740**
CHAPTER 312 ADJUSTMENT	**0**	**0**	**0**
CHAPTER 313 ADJUSTMENT	**0**	**0**	**0**
LIMIT ADJ TAXABLE (M&O)	**275,095,740**	**0**	**275,095,740**

APPROX TOTAL LEVY = LIMIT ADJ TAXABLE * (TAX RATE / 100) + ACTUAL TAX

$0 = 275,095,740 * (0.000000 / 100) + $0

CITY OF PHARR TAX INCREMENT

Tax Limit Adjustment Breakdown

(Freeze)

NOT UNDER REVIEW

UNDER REVIEW

Limitation	Net Appr	Taxable	Act Tax	Ceiling	Count
OV65	330,550	320,550	0	0	1
Total	330,550	320,550	0	0	1

Tax Rate: 0.000000

TOTAL

Limitation	Net Appr	Taxable	Act Tax	Ceiling	Count
OV65	330,550	320,550	0	0	1
Total	330,550	320,550	0	0	1

Tax Rate: 0.000000

CITY OF PHARR TAX INCREMENT

Exemptions

EXEMPTIONS	NOT UNDER REVIEW		UNDER REVIEW		TOTAL	
Exemption	Total	Count	Total	Count	Total	Count
Homestead Exemptions						
OV65-Local	80,000	9	10,000	1	90,000	10
OV65-State	0	0	0	0	0	0
OV65-Prorated	0	0	0	0	0	0
OV65S-Local	20,000	2	0	0	20,000	2
OV65S-State	0	0	0	0	0	0
OV65S-Prorated	0	0	0	0	0	0
DVHS	177,300	1	0	0	177,300	1
DVHS-Prorated	0	0	0	0	0	0
Subtotal for Homestead Exemptions	**277,300**	**12**	**10,000**	**1**	**287,300**	**13**
Disabled Veterans Exemptions						
DV4	12,000	1	0	0	12,000	1
Subtotal for Disabled Veterans Exemptions	**12,000**	**1**	**0**	**0**	**12,000**	**1**
Absolute Exemptions						
EX-XV	6,439,509	31	0	0	6,439,509	31
EX-XV-PRORATED	0	0	0	0	0	0
Subtotal for Absolute Exemptions	**6,439,509**	**31**	**0**	**0**	**6,439,509**	**31**
Total:	**6,728,809**	**44**	**10,000**	**1**	**6,738,809**	**45**

CITY OF PHARR TAX INCREMENT

No-New-Revenue Tax Rate Assumption

New Value

Total New Market Value: $13,737,569

Total New Taxable Value: $13,737,569

JETI

New Market Value: $0

New Taxable Value: $0

Chapter 313

New Market Value: $0

New Taxable Value: $0

Exemption Loss

New Absolute Exemptions

Exemption	Description	Count	Last Year Market Value
Absolute Exemption Value Loss:		**0**	**0**

New Partial Exemptions

Exemption	Description	Count	Partial Exemption Amt
Partial Exemption Value Loss:		**0**	**0**
Total NEW Exemption Value			**0**

Increased Exemptions

Exemption	Description	Count	Increased Exemption Amt
Increased Exemption Value Loss:		**0**	**0**
Total Exemption Value Loss:			**0**

New Special Use (Ag/Timber)

Count	2024 Market Value	2025 Special Use	Loss
1	0	699	699

Average Homestead Value

Category	Count of HS	Average Market	Average Exemption	Average Taxable
A Only	14	217,264	12,664	177,237
A & E	16	204,742	11,081	169,718

Property Under Review - Lower Value Used

Count	Market Value	Lower Market Value	Estimated Lower Taxable Value
1	484,901	231,750	153,201

CITY OF PHARR TAX INCREMENT

State Category Breakdown

Not Under Review

Code	Description	Count	Acres	New Value	Market Value	Taxable Value
A	Single-family Residential	27		0	4,518,364	3,977,764
C1	Vacant Lots and Tracts	48		0	19,636,275	18,853,667
D1	Qualified Open-Space Land	69	1,107.26	0	56,765,289	444,127
D2	Farm or Ranch Improvements on Qualified	1		0	1,481	1,481
E	Rural Land,Not Qualified for Open-Space Land	15		5,696	2,081,769	2,068,988
F1	Commercial Real Property	88		13,731,873	258,839,079	249,532,799
J3	Electric Companies (including Co-ops)	1		0	210,763	210,763
M1	Mobile Homes	1		0	6,151	6,151
XV	Other Totally Exempt Properties (including	31		0	6,439,509	0
		Totals:	1,107.26	13,737,569	348,498,680	275,095,740

CITY OF PHARR TAX INCREMENT

State Category Breakdown

Under Review

Code	Description	Count	Acres	New Value	Market Value	Taxable Value
A	Single-family Residential	1		0	484,901	320,550
		Totals:	0	0	484,901	320,550

CITY OF PHARR TAX INCREMENT

State Category Breakdown

Grand Totals

Code	Description	Count	Acres	New Value	Market Value	Taxable Value
A	Single-family Residential	28		0	5,003,265	4,298,314
C1	Vacant Lots and Tracts	48		0	19,636,275	18,853,667
D1	Qualified Open-Space Land	69	1,107.26	0	56,765,289	444,127
D2	Farm or Ranch Improvements on Qualified	1		0	1,481	1,481
E	Rural Land,Not Qualified for Open-Space Land	15		5,696	2,081,769	2,068,988
F1	Commercial Real Property	88		13,731,873	258,839,079	249,532,799
J3	Electric Companies (including Co-ops)	1		0	210,763	210,763
M1	Mobile Homes	1		0	6,151	6,151
XV	Other Totally Exempt Properties (including	31		0	6,439,509	0
		Totals:	1,107.26	13,737,569	348,983,581	275,416,290

CITY OF PHARR TAX INCREMENT

Top Taxpayers

Rank	Owner ID	Taxpayer Name	Market Value	Taxable Value
1	1154119	46TH STREET INVESTORS & PWIP LLC &	$40,725,125	$40,725,125
2	1012296	PHARR BRIDGE INVESTMENT COMPANY	$18,328,712	$16,382,816
3	1148056	BISSELL SOUTHWEST DC LEASING LLC	$14,844,688	$13,508,066
4	1277633	ECS-MCALLEN PROPCO LLC	$13,425,642	$13,425,642
5	1235264	OUTWESTERN LLC	$11,832,113	$11,832,113
6	1203970	WAREHOUSE LEASING OF TEXAS LLC	$9,812,114	$9,812,114
7	1242334	OCP CAPOTE 2022 LP	$9,095,242	$9,095,242
8	1279200	OCP CAPOTE 2023 LP	$9,095,242	$9,095,242
9	933301	BAKER PROSPERITY LLC	$6,780,480	$6,780,480
10	1194905	CEUTA PROPERTIES INC	$6,677,072	$6,677,072
11	1095890	INDEX FRESH OF TEXAS LLC	$5,797,092	$5,797,092
12	1062361	CAMPERO HOLDINGS COMPANY LLC	$6,909,274	$5,384,112
13	1196232	OMG INVESTMENTS LLC	$5,117,474	$5,107,974
14	1215176	CAMPERO LAND & DEVELOPMENT LLC	$7,393,121	$4,493,188
15	944988	EL ROSAL COLD STORAGE LLC	$4,425,319	$4,425,319
16	1016294	RODRIGUEZ JOSE ALFREDO & LAURA M	$4,245,940	$4,245,940
17	1249672	LAKEWAY FOODS LLC	$4,175,999	$4,175,999
18	559522	CAPOTE FARMS LTD	$15,326,384	$3,627,282
19	1099621	RAZA INVESTMENTS LLC	$3,592,549	$3,592,549
20	1145976	FAAT INVESTMENT GROUP LLC	$3,787,887	$3,494,461
		Total	$201,387,469	$181,677,828

CITY OF PHARR TAX INCREMENT

	NOT UNDER REVIEW	UNDER REVIEW	TOTAL
REAL PROPERTY & MFT HOMES	(Count) (202)	(Count) (5)	(Count) (207)
Land HS Value	5,863,822	331,409	6,195,231
Land NHS Value	56,109,862	148,743	56,258,605
Land Ag Market Value	14,804,941	0	14,804,941
Land Timber Market Value	0	0	0
Total Land Value	**76,778,625**	**480,152**	**77,258,777**
Improvement HS Value	14,525,631	832,348	15,357,979
Improvement NHS Value	108,908,938	499,467	109,408,405
Total Improvement	**123,434,569**	**1,331,815**	**124,766,384**
Market Value	**200,213,194**	**1,811,967**	**202,025,161**
BUSINESS PERSONAL PROPERTY	(0)	(0)	(0)
Market Value	**0**	**0**	**0**
OIL & GAS / MINERALS	(0)	(0)	(0)
Market Value	**0**	**0**	**0**
OTHER (Intangibles)	(0)	(0)	(0)
Market Value	**0**	**0**	**0**
	(Total Count) (202)	(Total Count) (5)	(Total Count) (207)
TOTAL MARKET	**200,213,194**	**1,811,967**	**202,025,161**
Ag Productivity	35,369	0	35,369
Ag Loss (-)	14,769,572	0	14,769,572
Timber Productivity	0	0	0
Timber Loss (-)	0	0	0
APPRAISED VALUE	**185,443,622**	**1,811,967**	**187,255,589**
	99.0%	1.0%	100.0%
HS CAP Limitation Value (-)	173,502	0	173,502
CB CAP Limitation Value (-)	1,816,959	0	1,816,959
NET APPRAISED VALUE	**183,453,161**	**1,811,967**	**185,265,128**
Total Exemption Amount	23,147,232	0	23,147,232
NET TAXABLE	**160,305,929**	**1,811,967**	**162,117,896**
TAX LIMIT/FREEZE ADJUSTMENT	**0**	**0**	**0**
LIMIT ADJ TAXABLE (I&S)	**160,305,929**	**1,811,967**	**162,117,896**
CHAPTER 312 ADJUSTMENT	**0**	**0**	**0**
CHAPTER 313 ADJUSTMENT	**0**	**0**	**0**
LIMIT ADJ TAXABLE (M&O)	**160,305,929**	**1,811,967**	**162,117,896**

APPROX TOTAL LEVY = NET TAXABLE * (TAX RATE / 100)

$0 = 162,117,896 * (0.000000 / 100)

CITY OF PHARR TAX INCREMENT

Exemptions

EXEMPTIONS	NOT UNDER REVIEW		UNDER REVIEW		TOTAL	
Exemption	Total	Count	Total	Count	Total	Count
Disabled Veterans Exemptions						
DV1	5,000	1	0	0	5,000	1
DV4	12,000	1	0	0	12,000	1
Subtotal for Disabled Veterans Exemptions	**17,000**	**2**	**0**	**0**	**17,000**	**2**
Absolute Exemptions						
EX-XV	23,130,232	4	0	0	23,130,232	4
EX-XV-PRORATED	0	0	0	0	0	0
Subtotal for Absolute Exemptions	**23,130,232**	**4**	**0**	**0**	**23,130,232**	**4**
Total:	**23,147,232**	**6**	**0**	**0**	**23,147,232**	**6**

CITY OF PHARR TAX INCREMENT

No-New-Revenue Tax Rate Assumption

New Value

Total New Market Value: $3,313,342

Total New Taxable Value: $3,313,342

JETI

New Market Value: $0

New Taxable Value: $0

Chapter 313

New Market Value: $0

New Taxable Value: $0

Exemption Loss

New Absolute Exemptions

Exemption	Description	Count	Last Year Market Value
Absolute Exemption Value Loss:		**0**	**0**

New Partial Exemptions

Exemption	Description	Count	Partial Exemption Amt
DV4	Disabled Veterans 70% - 100%	1	12,000
Partial Exemption Value Loss:		**1**	**12,000**
Total NEW Exemption Value			**12,000**

Increased Exemptions

Exemption	Description	Count	Increased Exemption Amt
Increased Exemption Value Loss:		**0**	**0**
Total Exemption Value Loss:			**12,000**

Average Homestead Value

Category	Count of HS	Average Market	Average Exemption	Average Taxable
A Only	67	298,370	0	297,448
A & E	67	298,370	0	297,448

Property Under Review - Lower Value Used

Count	Market Value	Lower Market Value	Estimated Lower Taxable Value
5	1,811,967	1,414,448	1,414,448

CITY OF PHARR TAX INCREMENT

State Category Breakdown

Not Under Review

Code	Description	Count	Acres	New Value	Market Value	Taxable Value
A	Single-family Residential	86		591,364	25,863,637	25,760,570
B	Multifamily Residential	73		0	36,808,962	35,534,736
C1	Vacant Lots and Tracts	14		0	7,356,467	7,309,361
D1	Qualified Open-Space Land	5	85.48	0	14,804,941	35,369
F1	Commercial Real Property	22		2,721,978	92,248,955	91,665,893
XV	Other Totally Exempt Properties (including	4		0	23,130,232	0
		Totals:	85.48	3,313,342	200,213,194	160,305,929

CITY OF PHARR TAX INCREMENT

State Category Breakdown

Under Review

Code	Description	Count	Acres	New Value	Market Value	Taxable Value
A	Single-family Residential	4		0	1,163,757	1,163,757
B	Multifamily Residential	1		0	648,210	648,210
		Totals:	0	0	1,811,967	1,811,967

CITY OF PHARR TAX INCREMENT

State Category Breakdown

Grand Totals

Code	Description	Count	Acres	New Value	Market Value	Taxable Value
A	Single-family Residential	90		591,364	27,027,394	26,924,327
B	Multifamily Residential	74		0	37,457,172	36,182,946
C1	Vacant Lots and Tracts	14		0	7,356,467	7,309,361
D1	Qualified Open-Space Land	5	85.48	0	14,804,941	35,369
F1	Commercial Real Property	22		2,721,978	92,248,955	91,665,893
XV	Other Totally Exempt Properties (including	4		0	23,130,232	0
		Totals:	85.48	3,313,342	202,025,161	162,117,896

CITY OF PHARR TAX INCREMENT

Top Taxpayers

Rank	Owner ID	Taxpayer Name	Market Value	Taxable Value
1	1155525	PTC TX HOLDINGS LLC	$47,750,606	$47,750,606
2	1219225	BFI NEWCO HOLDINGS INC	$12,203,296	$12,203,296
3	998530	MINNESOTA RD LLC	$7,114,405	$7,114,405
4	1067699	PAPPAS RESTAURANTS INC	$4,817,807	$4,817,807
5	1238106	MCALLEN HOSPITALS LP	$4,422,836	$4,422,836
6	1136755	AATTIC X1 LIMITED PARTNERSHIP	$4,100,788	$4,100,788
7	1126427	SABINE 2014-2 LLC	$2,202,047	$2,202,047
8	1099043	MCALLEN HOSPITALS LP	$2,181,703	$2,181,703
9	1092005	KENNMADD RESTAURANT GROUP LLC	$1,881,929	$1,881,929
10	1046195	AZ & SA FAMILY LP	$2,609,512	$1,756,800
11	1204578	INSPIRED PROPERTIES LLC	$1,787,414	$1,730,836
12	1129706	STORE MASTER FUNDING XII LLC	$1,699,590	$1,636,492
13	1126424	SABINE 2014-2 LLC	$1,547,889	$1,547,889
14	1252542	KO WASH LLC	$1,496,425	$1,496,425
15	1128979	SABINE 2014-2 LLC	$1,432,170	$1,432,170
16	1096643	TEXAS Q LLC	$1,364,790	$1,364,790
17	1164724	CALA CALA LLC	$1,310,286	$1,310,286
18	1125603	DOMUM GROUP LLC	$1,280,993	$1,280,993
19	1177665	CANTU LEAL INVESTMENTS LLC	$1,233,000	$1,233,000
20	729159	RONNIE CANTU CONSTRUCTION LLC	$1,367,198	$1,231,195
		Total	$103,804,684	$102,696,293

COUNTY - CITY OF PHARR TAX

	NOT UNDER REVIEW	UNDER REVIEW	TOTAL
REAL PROPERTY & MFT HOMES	(Count) (256)	(Count) (1)	(Count) (257)
Land HS Value	1,001,785	68,750	1,070,535
Land NHS Value	82,706,883	0	82,706,883
Land Ag Market Value	56,765,289	0	56,765,289
Land Timber Market Value	0	0	0
Total Land Value	**140,473,957**	**68,750**	**140,542,707**
Improvement HS Value	1,789,182	416,151	2,205,333
Improvement NHS Value	206,235,541	0	206,235,541
Total Improvement	**208,024,723**	**416,151**	**208,440,874**
Market Value	**348,498,680**	**484,901**	**348,983,581**
BUSINESS PERSONAL PROPERTY	(0)	(0)	(0)
Market Value	**0**	**0**	**0**
OIL & GAS / MINERALS	(0)	(0)	(0)
Market Value	**0**	**0**	**0**
OTHER (Intangibles)	(0)	(0)	(0)
Market Value	**0**	**0**	**0**
	(Total Count) (256)	(Total Count) (1)	(Total Count) (257)
TOTAL MARKET	**348,498,680**	**484,901**	**348,983,581**
Ag Productivity	444,127	0	444,127
Ag Loss (-)	56,321,162	0	56,321,162
Timber Productivity	0	0	0
Timber Loss (-)	0	0	0
APPRAISED VALUE	**292,177,518**	**484,901**	**292,662,419**
	99.8%	0.2%	100.0%
HS CAP Limitation Value (-)	228,725	154,351	383,076
CB CAP Limitation Value (-)	10,124,244	0	10,124,244
NET APPRAISED VALUE	**281,824,549**	**330,550**	**282,155,099**
Total Exemption Amount	6,778,809	15,000	6,793,809
NET TAXABLE	**275,045,740**	**315,550**	**275,361,290**
TAX LIMIT/FREEZE ADJUSTMENT	**0**	**315,550**	**315,550**
LIMIT ADJ TAXABLE (I&S)	**275,045,740**	**0**	**275,045,740**
CHAPTER 312 ADJUSTMENT	**0**	**0**	**0**
CHAPTER 313 ADJUSTMENT	**0**	**0**	**0**
LIMIT ADJ TAXABLE (M&O)	**275,045,740**	**0**	**275,045,740**

APPROX TOTAL LEVY = LIMIT ADJ TAXABLE * (TAX RATE / 100) + ACTUAL TAX

$0 = 275,045,740 * (0.000000 / 100) + $0

COUNTY - CITY OF PHARR TAX

Tax Limit Adjustment Breakdown

(Freeze)

NOT UNDER REVIEW

UNDER REVIEW

Limitation	Net Appr	Taxable	Act Tax	Ceiling	Count
OV65	330,550	315,550	0	0	1
Total	330,550	315,550	0	0	1

Tax Rate: 0.000000

TOTAL

Limitation	Net Appr	Taxable	Act Tax	Ceiling	Count
OV65	330,550	315,550	0	0	1
Total	330,550	315,550	0	0	1

Tax Rate: 0.000000

COUNTY - CITY OF PHARR TAX

Exemptions

EXEMPTIONS	NOT UNDER REVIEW		UNDER REVIEW		TOTAL	
Exemption	Total	Count	Total	Count	Total	Count
Homestead Exemptions						
OV65-Local	120,000	9	15,000	1	135,000	10
OV65-State	0	0	0	0	0	0
OV65-Prorated	0	0	0	0	0	0
OV65S-Local	30,000	2	0	0	30,000	2
OV65S-State	0	0	0	0	0	0
OV65S-Prorated	0	0	0	0	0	0
DVHS	177,300	1	0	0	177,300	1
DVHS-Prorated	0	0	0	0	0	0
Subtotal for Homestead Exemptions	**327,300**	**12**	**15,000**	**1**	**342,300**	**13**
Disabled Veterans Exemptions						
DV4	12,000	1	0	0	12,000	1
Subtotal for Disabled Veterans Exemptions	**12,000**	**1**	**0**	**0**	**12,000**	**1**
Absolute Exemptions						
EX-XV	6,439,509	31	0	0	6,439,509	31
EX-XV-PRORATED	0	0	0	0	0	0
Subtotal for Absolute Exemptions	**6,439,509**	**31**	**0**	**0**	**6,439,509**	**31**
Total:	**6,778,809**	**44**	**15,000**	**1**	**6,793,809**	**45**

COUNTY - CITY OF PHARR TAX

No-New-Revenue Tax Rate Assumption

New Value

Total New Market Value: $13,737,569

Total New Taxable Value: $13,737,569

JETI

New Market Value: $0

New Taxable Value: $0

Chapter 313

New Market Value: $0

New Taxable Value: $0

Exemption Loss

New Absolute Exemptions

Exemption	Description	Count	Last Year Market Value
Absolute Exemption Value Loss:		**0**	**0**

New Partial Exemptions

Exemption	Description	Count	Partial Exemption Amt
Partial Exemption Value Loss:		**0**	**0**
Total NEW Exemption Value			**0**

Increased Exemptions

Exemption	Description	Count	Increased Exemption Amt
Increased Exemption Value Loss:		**0**	**0**
Total Exemption Value Loss:			**0**

New Special Use (Ag/Timber)

Count	2024 Market Value	2025 Special Use	Loss
1	0	699	699

Average Homestead Value

Category	Count of HS	Average Market	Average Exemption	Average Taxable
A Only	14	217,264	12,664	177,237
A & E	16	204,742	11,081	169,718

Property Under Review - Lower Value Used

Count	Market Value	Lower Market Value	Estimated Lower Taxable Value
1	484,901	231,750	150,812

COUNTY - CITY OF PHARR TAX

State Category Breakdown

Not Under Review

Code	Description	Count	Acres	New Value	Market Value	Taxable Value
A	Single-family Residential	27		0	4,518,364	3,932,764
C1	Vacant Lots and Tracts	48		0	19,636,275	18,853,667
D1	Qualified Open-Space Land	69	1,107.26	0	56,765,289	444,127
D2	Farm or Ranch Improvements on Qualified	1		0	1,481	1,481
E	Rural Land,Not Qualified for Open-Space Land	15		5,696	2,081,769	2,063,988
F1	Commercial Real Property	88		13,731,873	258,839,079	249,532,799
J3	Electric Companies (including Co-ops)	1		0	210,763	210,763
M1	Mobile Homes	1		0	6,151	6,151
XV	Other Totally Exempt Properties (including	31		0	6,439,509	0
		Totals:	1,107.26	13,737,569	348,498,680	275,045,740

COUNTY - CITY OF PHARR TAX

State Category Breakdown

Under Review

Code	Description	Count	Acres	New Value	Market Value	Taxable Value
A	Single-family Residential	1		0	484,901	315,550
		Totals:	0	0	484,901	315,550

COUNTY - CITY OF PHARR TAX

State Category Breakdown

Grand Totals

Code	Description	Count	Acres	New Value	Market Value	Taxable Value
A	Single-family Residential	28		0	5,003,265	4,248,314
C1	Vacant Lots and Tracts	48		0	19,636,275	18,853,667
D1	Qualified Open-Space Land	69	1,107.26	0	56,765,289	444,127
D2	Farm or Ranch Improvements on Qualified	1		0	1,481	1,481
E	Rural Land,Not Qualified for Open-Space Land	15		5,696	2,081,769	2,063,988
F1	Commercial Real Property	88		13,731,873	258,839,079	249,532,799
J3	Electric Companies (including Co-ops)	1		0	210,763	210,763
M1	Mobile Homes	1		0	6,151	6,151
XV	Other Totally Exempt Properties (including	31		0	6,439,509	0
		Totals:	1,107.26	13,737,569	348,983,581	275,361,290

COUNTY - CITY OF PHARR TAX

Top Taxpayers

Rank	Owner ID	Taxpayer Name	Market Value	Taxable Value
1	1154119	46TH STREET INVESTORS & PWIP LLC &	$40,725,125	$40,725,125
2	1012296	PHARR BRIDGE INVESTMENT COMPANY	$18,328,712	$16,382,816
3	1148056	BISSELL SOUTHWEST DC LEASING LLC	$14,844,688	$13,508,066
4	1277633	ECS-MCALLEN PROPCO LLC	$13,425,642	$13,425,642
5	1235264	OUTWESTERN LLC	$11,832,113	$11,832,113
6	1203970	WAREHOUSE LEASING OF TEXAS LLC	$9,812,114	$9,812,114
7	1242334	OCP CAPOTE 2022 LP	$9,095,242	$9,095,242
8	1279200	OCP CAPOTE 2023 LP	$9,095,242	$9,095,242
9	933301	BAKER PROSPERITY LLC	$6,780,480	$6,780,480
10	1194905	CEUTA PROPERTIES INC	$6,677,072	$6,677,072
11	1095890	INDEX FRESH OF TEXAS LLC	$5,797,092	$5,797,092
12	1062361	CAMPERO HOLDINGS COMPANY LLC	$6,909,274	$5,384,112
13	1196232	OMG INVESTMENTS LLC	$5,117,474	$5,107,974
14	1215176	CAMPERO LAND & DEVELOPMENT LLC	$7,393,121	$4,493,188
15	944988	EL ROSAL COLD STORAGE LLC	$4,425,319	$4,425,319
16	1016294	RODRIGUEZ JOSE ALFREDO & LAURA M	$4,245,940	$4,245,940
17	1249672	LAKEWAY FOODS LLC	$4,175,999	$4,175,999
18	559522	CAPOTE FARMS LTD	$15,326,384	$3,627,282
19	1099621	RAZA INVESTMENTS LLC	$3,592,549	$3,592,549
20	1145976	FAAT INVESTMENT GROUP LLC	$3,787,887	$3,494,461
		Total	$201,387,469	$181,677,828

COUNTY - CITY OF PHARR TAX

	NOT UNDER REVIEW	UNDER REVIEW	TOTAL
REAL PROPERTY & MFT HOMES	(Count) (202)	(Count) (5)	(Count) (207)
Land HS Value	5,863,822	331,409	6,195,231
Land NHS Value	56,109,862	148,743	56,258,605
Land Ag Market Value	14,804,941	0	14,804,941
Land Timber Market Value	0	0	0
Total Land Value	**76,778,625**	**480,152**	**77,258,777**
Improvement HS Value	14,525,631	832,348	15,357,979
Improvement NHS Value	108,908,938	499,467	109,408,405
Total Improvement	**123,434,569**	**1,331,815**	**124,766,384**
Market Value	**200,213,194**	**1,811,967**	**202,025,161**
BUSINESS PERSONAL PROPERTY	(0)	(0)	(0)
Market Value	**0**	**0**	**0**
OIL & GAS / MINERALS	(0)	(0)	(0)
Market Value	**0**	**0**	**0**
OTHER (Intangibles)	(0)	(0)	(0)
Market Value	**0**	**0**	**0**
	(Total Count) (202)	(Total Count) (5)	(Total Count) (207)
TOTAL MARKET	**200,213,194**	**1,811,967**	**202,025,161**
Ag Productivity	35,369	0	35,369
Ag Loss (-)	14,769,572	0	14,769,572
Timber Productivity	0	0	0
Timber Loss (-)	0	0	0
APPRAISED VALUE	**185,443,622**	**1,811,967**	**187,255,589**
	99.0%	1.0%	100.0%
HS CAP Limitation Value (-)	173,502	0	173,502
CB CAP Limitation Value (-)	1,816,959	0	1,816,959
NET APPRAISED VALUE	**183,453,161**	**1,811,967**	**185,265,128**
Total Exemption Amount	23,147,232	0	23,147,232
NET TAXABLE	**160,305,929**	**1,811,967**	**162,117,896**
TAX LIMIT/FREEZE ADJUSTMENT	**0**	**0**	**0**
LIMIT ADJ TAXABLE (I&S)	**160,305,929**	**1,811,967**	**162,117,896**
CHAPTER 312 ADJUSTMENT	**0**	**0**	**0**
CHAPTER 313 ADJUSTMENT	**0**	**0**	**0**
LIMIT ADJ TAXABLE (M&O)	**160,305,929**	**1,811,967**	**162,117,896**

APPROX TOTAL LEVY = NET TAXABLE * (TAX RATE / 100)

$0 = 162,117,896 * (0.000000 / 100)

COUNTY - CITY OF PHARR TAX

Exemptions

EXEMPTIONS	NOT UNDER REVIEW		UNDER REVIEW		TOTAL	
Exemption	Total	Count	Total	Count	Total	Count
Disabled Veterans Exemptions						
DV1	5,000	1	0	0	5,000	1
DV4	12,000	1	0	0	12,000	1
Subtotal for Disabled Veterans Exemptions	**17,000**	**2**	**0**	**0**	**17,000**	**2**
Absolute Exemptions						
EX-XV	23,130,232	4	0	0	23,130,232	4
EX-XV-PRORATED	0	0	0	0	0	0
Subtotal for Absolute Exemptions	**23,130,232**	**4**	**0**	**0**	**23,130,232**	**4**
Total:	**23,147,232**	**6**	**0**	**0**	**23,147,232**	**6**

COUNTY - CITY OF PHARR TAX

No-New-Revenue Tax Rate Assumption

New Value

Total New Market Value: $3,313,342

Total New Taxable Value: $3,313,342

JETI

New Market Value: $0

New Taxable Value: $0

Chapter 313

New Market Value: $0

New Taxable Value: $0

Exemption Loss

New Absolute Exemptions

Exemption	Description	Count	Last Year Market Value
Absolute Exemption Value Loss:		**0**	**0**

New Partial Exemptions

Exemption	Description	Count	Partial Exemption Amt
DV4	Disabled Veterans 70% - 100%	1	12,000
Partial Exemption Value Loss:		**1**	**12,000**
Total NEW Exemption Value			**12,000**

Increased Exemptions

Exemption	Description	Count	Increased Exemption Amt
Increased Exemption Value Loss:		**0**	**0**
Total Exemption Value Loss:			**12,000**

Average Homestead Value

Category	Count of HS	Average Market	Average Exemption	Average Taxable
A Only	67	298,370	0	297,448
A & E	67	298,370	0	297,448

Property Under Review - Lower Value Used

Count	Market Value	Lower Market Value	Estimated Lower Taxable Value
5	1,811,967	1,414,448	1,414,448

COUNTY - CITY OF PHARR TAX

State Category Breakdown

Not Under Review

Code	Description	Count	Acres	New Value	Market Value	Taxable Value
A	Single-family Residential	86		591,364	25,863,637	25,760,570
B	Multifamily Residential	73		0	36,808,962	35,534,736
C1	Vacant Lots and Tracts	14		0	7,356,467	7,309,361
D1	Qualified Open-Space Land	5	85.48	0	14,804,941	35,369
F1	Commercial Real Property	22		2,721,978	92,248,955	91,665,893
XV	Other Totally Exempt Properties (including	4		0	23,130,232	0
		Totals:	85.48	3,313,342	200,213,194	160,305,929

COUNTY - CITY OF PHARR TAX

State Category Breakdown

Under Review

Code	Description	Count	Acres	New Value	Market Value	Taxable Value
A	Single-family Residential	4		0	1,163,757	1,163,757
B	Multifamily Residential	1		0	648,210	648,210
		Totals:	0	0	1,811,967	1,811,967

COUNTY - CITY OF PHARR TAX

State Category Breakdown

Grand Totals

Code	Description	Count	Acres	New Value	Market Value	Taxable Value
A	Single-family Residential	90		591,364	27,027,394	26,924,327
B	Multifamily Residential	74		0	37,457,172	36,182,946
C1	Vacant Lots and Tracts	14		0	7,356,467	7,309,361
D1	Qualified Open-Space Land	5	85.48	0	14,804,941	35,369
F1	Commercial Real Property	22		2,721,978	92,248,955	91,665,893
XV	Other Totally Exempt Properties (including	4		0	23,130,232	0
		Totals:	85.48	3,313,342	202,025,161	162,117,896

COUNTY - CITY OF PHARR TAX

Top Taxpayers

Rank	Owner ID	Taxpayer Name	Market Value	Taxable Value
1	1155525	PTC TX HOLDINGS LLC	$47,750,606	$47,750,606
2	1219225	BFI NEWCO HOLDINGS INC	$12,203,296	$12,203,296
3	998530	MINNESOTA RD LLC	$7,114,405	$7,114,405
4	1067699	PAPPAS RESTAURANTS INC	$4,817,807	$4,817,807
5	1238106	MCALLEN HOSPITALS LP	$4,422,836	$4,422,836
6	1136755	AATTIC X1 LIMITED PARTNERSHIP	$4,100,788	$4,100,788
7	1126427	SABINE 2014-2 LLC	$2,202,047	$2,202,047
8	1099043	MCALLEN HOSPITALS LP	$2,181,703	$2,181,703
9	1092005	KENNMADD RESTAURANT GROUP LLC	$1,881,929	$1,881,929
10	1046195	AZ & SA FAMILY LP	$2,609,512	$1,756,800
11	1204578	INSPIRED PROPERTIES LLC	$1,787,414	$1,730,836
12	1129706	STORE MASTER FUNDING XII LLC	$1,699,590	$1,636,492
13	1126424	SABINE 2014-2 LLC	$1,547,889	$1,547,889
14	1252542	KO WASH LLC	$1,496,425	$1,496,425
15	1128979	SABINE 2014-2 LLC	$1,432,170	$1,432,170
16	1096643	TEXAS Q LLC	$1,364,790	$1,364,790
17	1164724	CALA CALA LLC	$1,310,286	$1,310,286
18	1125603	DOMUM GROUP LLC	$1,280,993	$1,280,993
19	1177665	CANTU LEAL INVESTMENTS LLC	$1,233,000	$1,233,000
20	729159	RONNIE CANTU CONSTRUCTION LLC	$1,367,198	$1,231,195
		Total	$103,804,684	$102,696,293

MERCEDES TAX INCREMENT ZONE 1

	NOT UNDER REVIEW	UNDER REVIEW	TOTAL
REAL PROPERTY & MFT HOMES	(Count) (727)	(Count) (31)	(Count) (758)
Land HS Value	10,428,584	517,600	10,946,184
Land NHS Value	49,254,886	1,011,045	50,265,931
Land Ag Market Value	29,167,366	0	29,167,366
Land Timber Market Value	0	0	0
Total Land Value	**88,850,836**	**1,528,645**	**90,379,481**
Improvement HS Value	33,932,571	1,699,200	35,631,771
Improvement NHS Value	65,056,881	265,822	65,322,703
Total Improvement	**98,989,452**	**1,965,022**	**100,954,474**
Market Value	**187,840,288**	**3,493,667**	**191,333,955**
BUSINESS PERSONAL PROPERTY	(0)	(0)	(0)
Market Value	**0**	**0**	**0**
OIL & GAS / MINERALS	(0)	(0)	(0)
Market Value	**0**	**0**	**0**
OTHER (Intangibles)	(0)	(0)	(0)
Market Value	**0**	**0**	**0**
	(Total Count) (727)	(Total Count) (31)	(Total Count) (758)
TOTAL MARKET	**187,840,288**	**3,493,667**	**191,333,955**
Ag Productivity	321,169	0	321,169
Ag Loss (-)	28,846,197	0	28,846,197
Timber Productivity	0	0	0
Timber Loss (-)	0	0	0
APPRAISED VALUE	**158,994,091**	**3,493,667**	**162,487,758**
	97.8%	2.2%	100.0%
HS CAP Limitation Value (-)	1,879,706	56,138	1,935,844
CB CAP Limitation Value (-)	4,771,365	27,547	4,798,912
NET APPRAISED VALUE	**152,343,020**	**3,409,982**	**155,753,002**
Total Exemption Amount	21,220,790	82,636	21,303,426
NET TAXABLE	**131,122,230**	**3,327,346**	**134,449,576**
TAX LIMIT/FREEZE ADJUSTMENT	**0**	**0**	**0**
LIMIT ADJ TAXABLE (I&S)	**131,122,230**	**3,327,346**	**134,449,576**
CHAPTER 312 ADJUSTMENT	**0**	**0**	**0**
CHAPTER 313 ADJUSTMENT	**0**	**0**	**0**
LIMIT ADJ TAXABLE (M&O)	**131,122,230**	**3,327,346**	**134,449,576**

APPROX TOTAL LEVY = NET TAXABLE * (TAX RATE / 100)

$0 = 134,449,576 * (0.000000 / 100)

MERCEDES TAX INCREMENT ZONE 1

Exemptions

EXEMPTIONS	NOT UNDER REVIEW		UNDER REVIEW		TOTAL	
Exemption	Total	Count	Total	Count	Total	Count
Homestead Exemptions						
OV65-Local	108,000	26	4,500	1	112,500	27
OV65-State	0	0	0	0	0	0
OV65-Prorated	0	0	0	0	0	0
OV65S-Local	4,500	1	0	0	4,500	1
OV65S-State	0	0	0	0	0	0
OV65S-Prorated	0	0	0	0	0	0
DVHS	2,718,999	12	0	0	2,718,999	12
DVHS-Prorated	60,286	1	0	0	60,286	1
Subtotal for Homestead Exemptions	**2,891,785**	**40**	**4,500**	**1**	**2,896,285**	**41**
Disabled Veterans Exemptions						
DV1	12,000	1	0	0	12,000	1
DV3	10,000	1	0	0	10,000	1
DV4	72,000	6	0	0	72,000	6
Subtotal for Disabled Veterans Exemptions	**94,000**	**8**	**0**	**0**	**94,000**	**8**
Special Exemptions						
Charitable Org	0	0	78,136	1	78,136	1
Subtotal for Special Exemptions	**0**	**0**	**78,136**	**1**	**78,136**	**1**
Absolute Exemptions						
EX-XU	8,896	1	0	0	8,896	1
EX-XU-PRORATED	0	0	0	0	0	0
EX-XV	18,226,109	43	0	0	18,226,109	43
EX-XV-PRORATED	0	0	0	0	0	0
Subtotal for Absolute Exemptions	**18,235,005**	**44**	**0**	**0**	**18,235,005**	**44**
Total:	**21,220,790**	**92**	**82,636**	**2**	**21,303,426**	**94**

MERCEDES TAX INCREMENT ZONE 1

No-New-Revenue Tax Rate Assumption

New Value

Total New Market Value: $13,206,738

Total New Taxable Value: $13,203,266

JETI

New Market Value: $0

New Taxable Value: $0

Chapter 313

New Market Value: $0

New Taxable Value: $0

Exemption Loss

New Absolute Exemptions

Exemption	Description	Count	Last Year Market Value
EX-XV	Other Exemptions (including public property, reli...	3	71,238
Absolute Exemption Value Loss:		**3**	**71,238**

New Partial Exemptions

Exemption	Description	Count	Partial Exemption Amt
CHODO	11.182 Community Housing Development Organi...	1	78,136
OV65	Over 65	1	4,500
Partial Exemption Value Loss:		**2**	**82,636**
Total NEW Exemption Value			**153,874**

Increased Exemptions

Exemption	Description	Count	Increased Exemption Amt
Increased Exemption Value Loss:		**0**	**0**
Total Exemption Value Loss:			**153,874**

Average Homestead Value

Category	Count of HS	Average Market	Average Exemption	Average Taxable
A Only	219	210,742	12,691	189,256
A & E	222	209,811	12,519	188,571

Property Under Review - Lower Value Used

Count	Market Value	Lower Market Value	Estimated Lower Taxable Value
31	3,493,667	2,936,131	2,797,778

MERCEDES TAX INCREMENT ZONE 1

State Category Breakdown

Not Under Review

Code	Description	Count	Acres	New Value	Market Value	Taxable Value
A	Single-family Residential	393		11,080,779	74,827,669	69,700,309
B	Multifamily Residential	2		0	11,769,523	11,681,226
C1	Vacant Lots and Tracts	202		0	15,227,173	12,992,315
D1	Qualified Open-Space Land	43	799.14	0	29,167,366	321,169
D2	Farm or Ranch Improvements on Qualified	1		0	9,337	9,337
E	Rural Land,Not Qualified for Open-Space Land	6		0	909,806	858,670
F1	Commercial Real Property	24		2,015,829	37,142,599	35,016,389
J2	Gas Distribution Systems	1		0	1,500	1,451
O	Residential Inventory	18		0	550,310	541,364
XU	MiscellaneousExemptions (§11.23)	1		0	8,896	0
XV	Other Totally Exempt Properties (including	45		0	18,226,109	0
		Totals:	799.14	13,096,608	187,840,288	131,122,230

MERCEDES TAX INCREMENT ZONE 1

State Category Breakdown

Under Review

Code	Description	Count	Acres	New Value	Market Value	Taxable Value
A	Single-family Residential	13		110,130	2,631,746	2,482,849
C1	Vacant Lots and Tracts	18		0	861,921	844,497
		Totals:	0	110,130	3,493,667	3,327,346

MERCEDES TAX INCREMENT ZONE 1

State Category Breakdown

Grand Totals

Code	Description	Count	Acres	New Value	Market Value	Taxable Value
A	Single-family Residential	406		11,190,909	77,459,415	72,183,158
B	Multifamily Residential	2		0	11,769,523	11,681,226
C1	Vacant Lots and Tracts	220		0	16,089,094	13,836,812
D1	Qualified Open-Space Land	43	799.14	0	29,167,366	321,169
D2	Farm or Ranch Improvements on Qualified	1		0	9,337	9,337
E	Rural Land,Not Qualified for Open-Space Land	6		0	909,806	858,670
F1	Commercial Real Property	24		2,015,829	37,142,599	35,016,389
J2	Gas Distribution Systems	1		0	1,500	1,451
O	Residential Inventory	18		0	550,310	541,364
XU	MiscellaneousExemptions (§11.23)	1		0	8,896	0
XV	Other Totally Exempt Properties (including	45		0	18,226,109	0
		Totals:	799.14	13,206,738	191,333,955	134,449,576

MERCEDES TAX INCREMENT ZONE 1

Top Taxpayers

Rank	Owner ID	Taxpayer Name	Market Value	Taxable Value
1	1270285	VALLEY RANCH CONSTRUCTION 1 LLC	$13,522,899	$13,522,899
2	1140724	SETZER PROPERTIES HRL LLC	$9,536,038	$9,536,038
3	1215020	NATIONAL WEST ALLIS WG	$6,050,551	$5,962,254
4	1317334	TR ANAQUITAS MERCEDES LLC	$5,718,972	$5,718,972
5	1248267	MERCEDES TRAVEL PLAZA LLC	$5,000,000	$5,000,000
6	1236390	VALLEY RANCH DEVELOPMENT LLC	$3,326,142	$3,326,142
7	984044	TEXAS VALLEY COMMUNITIES	$3,060,155	$3,060,155
8	1270810	DUFF REAL ESTATE LLC	$2,716,197	$2,716,197
9	1288262	NSA PROPERTY HOLDINGS LLC	$2,487,667	$2,487,667
10	678914	SARINA GROUP LTD	$4,246,828	$2,277,491
11	732538	THREE CHIEF PRO LP	$1,800,000	$1,800,000
12	1252399	PACIFIC COMMODITIES LLC	$1,730,000	$1,730,000
13	1249019	CILL-KEN DEVELOPMENTS LLC	$1,721,798	$1,721,798
14	1081292	VACKAR KRISTIN NICOLE	$1,475,000	$1,475,000
15	112158	AFFORDABLE HOMES OF SOUTH TEXAS	$1,266,206	$1,170,646
16	519002	MERCEDES BUILDERS LTD	$3,244,393	$1,141,374
17	1190598	DV WYOMING LLC	$1,110,000	$1,110,000
18	1219567	MERCEDES OFFICE BUILDING LLC	$1,097,168	$1,097,168
19	1129345	TIKI LAND COMPANY LLC	$985,877	$867,309
20	1253888	BW MILE 2 MERCEDES LLC	$772,860	$772,860
		Total	$70,868,751	$66,493,970

MCALLEN PUB IMP DIST

	NOT UNDER REVIEW	UNDER REVIEW	TOTAL
REAL PROPERTY & MFT HOMES	(Count) (271)	(Count) (3)	(Count) (274)
Land HS Value	0	0	0
Land NHS Value	32,789,477	244,850	33,034,327
Land Ag Market Value	0	0	0
Land Timber Market Value	0	0	0
Total Land Value	**32,789,477**	**244,850**	**33,034,327**
Improvement HS Value	0	0	0
Improvement NHS Value	68,736,606	332,875	69,069,481
Total Improvement	**68,736,606**	**332,875**	**69,069,481**
Market Value	**101,526,083**	**577,725**	**102,103,808**
BUSINESS PERSONAL PROPERTY	(0)	(0)	(0)
Market Value	**0**	**0**	**0**
OIL & GAS / MINERALS	(0)	(0)	(0)
Market Value	**0**	**0**	**0**
OTHER (Intangibles)	(0)	(0)	(0)
Market Value	**0**	**0**	**0**
	(Total Count) (271)	(Total Count) (3)	(Total Count) (274)
TOTAL MARKET	**101,526,083**	**577,725**	**102,103,808**
Ag Productivity	0	0	0
Ag Loss (-)	0	0	0
Timber Productivity	0	0	0
Timber Loss (-)	0	0	0
APPRAISED VALUE	**101,526,083**	**577,725**	**102,103,808**
	99.4%	0.6%	100.0%
HS CAP Limitation Value (-)	0	0	0
CB CAP Limitation Value (-)	5,070,144	42,606	5,112,750
NET APPRAISED VALUE	**96,455,939**	**535,119**	**96,991,058**
Total Exemption Amount	19,079,951	0	19,079,951
NET TAXABLE	**77,375,988**	**535,119**	**77,911,107**
TAX LIMIT/FREEZE ADJUSTMENT	**0**	**0**	**0**
LIMIT ADJ TAXABLE (I&S)	**77,375,988**	**535,119**	**77,911,107**
CHAPTER 312 ADJUSTMENT	**0**	**0**	**0**
CHAPTER 313 ADJUSTMENT	**0**	**0**	**0**
LIMIT ADJ TAXABLE (M&O)	**77,375,988**	**535,119**	**77,911,107**

APPROX TOTAL LEVY = NET TAXABLE * (TAX RATE / 100)

$0 = 77,911,107 * (0.000000 / 100)

MCALLEN PUB IMP DIST

Exemptions

EXEMPTIONS	NOT UNDER REVIEW		UNDER REVIEW		TOTAL	
Exemption	Total	Count	Total	Count	Total	Count
Special Exemptions						
EX-11.35 1	126,942	1	0	0	126,942	1
EX-11.35 1 PRORATED	0	0	0	0	0	0
HT	0	1	0	0	0	1
Subtotal for Special Exemptions	**126,942**	**2**	**0**	**0**	**126,942**	**2**
Absolute Exemptions						
EX-XV	18,953,009	15	0	0	18,953,009	15
EX-XV-PRORATED	0	0	0	0	0	0
Subtotal for Absolute Exemptions	**18,953,009**	**15**	**0**	**0**	**18,953,009**	**15**
Total:	**19,079,951**	**17**	**0**	**0**	**19,079,951**	**17**

New Value

Total New Market Value: $307,541

Total New Taxable Value: $307,541

JETI

New Market Value: $0

New Taxable Value: $0

Chapter 313

New Market Value: $0

New Taxable Value: $0

Exemption Loss

New Absolute Exemptions

Exemption	Description	Count	Last Year Market Value
EX-11.35 1	Level 1 Damage Assessment Rating	1	417,000
Absolute Exemption Value Loss:		**1**	**417,000**

New Partial Exemptions

Exemption	Description	Count	Partial Exemption Amt
Partial Exemption Value Loss:		**0**	**0**
Total NEW Exemption Value			**417,000**

Increased Exemptions

Exemption	Description	Count	Increased Exemption Amt
Increased Exemption Value Loss:		**0**	**0**
Total Exemption Value Loss:			**417,000**

Property Under Review - Lower Value Used

Count	Market Value	Lower Market Value	Estimated Lower Taxable Value
3	577,725	427,858	398,130

MCALLEN PUB IMP DIST

State Category Breakdown

Not Under Review

Code	Description	Count	Acres	New Value	Market Value	Taxable Value
A	Single-family Residential	5		0	359,530	314,872
B	Multifamily Residential	2		0	298,982	241,566
C1	Vacant Lots and Tracts	4		0	417,365	388,571
F1	Commercial Real Property	253		307,541	81,497,197	76,430,979
XV	Other Totally Exempt Properties (including	15		0	18,953,009	0
		Totals:	0	307,541	101,526,083	77,375,988

MCALLEN PUB IMP DIST

State Category Breakdown

Under Review

Code	Description	Count	Acres	New Value	Market Value	Taxable Value
F1	Commercial Real Property	3		0	577,725	535,119
		Totals:	0	0	577,725	535,119

MCALLEN PUB IMP DIST

State Category Breakdown

Grand Totals

Code	Description	Count	Acres	New Value	Market Value	Taxable Value
A	Single-family Residential	5		0	359,530	314,872
B	Multifamily Residential	2		0	298,982	241,566
C1	Vacant Lots and Tracts	4		0	417,365	388,571
F1	Commercial Real Property	256		307,541	82,074,922	76,966,098
XV	Other Totally Exempt Properties (including	15		0	18,953,009	0
		Totals:	0	307,541	102,103,808	77,911,107

MCALLEN PUB IMP DIST

Top Taxpayers

Rank	Owner ID	Taxpayer Name	Market Value	Taxable Value
1	524151	D D D PROPERTIES INC	$1,732,000	$1,732,000
2	1196015	KALIFA REAL ESTATE LLC	$1,288,079	$1,288,079
3	1262453	107 S 17TH LLC	$1,205,968	$1,173,467
4	1292870	FPCINS LLC	$1,160,397	$1,160,397
5	647160	AMIGO STORE INC	$1,176,913	$1,143,863
6	1258589	NELSON MORRIS R II ET AL	$1,039,305	$1,039,305
7	1157301	KFLP EQUITY I LLC	$970,698	$970,698
8	1046700	19 S MAIN STREET LLC	$920,000	$920,000
9	1240133	MANHATTAN ENTERPRISES LLC	$907,372	$907,372
10	68489	GLOBE PROPERTIES INC	$907,050	$907,050
11	263570	1511 BEAUMONT INC	$901,211	$901,211
12	1052074	NFL FAMILY LIMITED PARTNERSHIP	$899,862	$881,470
13	671287	KUMAR KOSHI	$855,000	$855,000
14	604781	KIM DAVID BYUNGSOO	$826,683	$826,683
15	649302	TKD INVESTMENTS INC	$810,000	$810,000
16	1006535	MEDINA VISION CARE P LLC	$950,772	$804,518
17	684127	LEE SUNG EUN	$877,657	$799,980
18	1119776	BERECA LLC	$798,021	$798,021
19	346992	SARA ELLEN & SAMUEL CHILDREN'S	$775,025	$775,025
20	68472	FERNANDEZ LAZARO H & NOE	$771,838	$771,838
		Total	$19,773,851	$19,465,977

MCALLEN TAX INCREMENT ZONE 1

	NOT UNDER REVIEW	UNDER REVIEW	TOTAL
REAL PROPERTY & MFT HOMES	(Count) (1,252)	(Count) (19)	(Count) (1,271)
Land HS Value	58,827,536	1,385,834	60,213,370
Land NHS Value	77,447,057	339,529	77,786,586
Land Ag Market Value	24,996,528	0	24,996,528
Land Timber Market Value	0	0	0
Total Land Value	**161,271,121**	**1,725,363**	**162,996,484**
Improvement HS Value	173,953,875	4,268,769	178,222,644
Improvement NHS Value	175,411,496	503,143	175,914,639
Total Improvement	**349,365,371**	**4,771,912**	**354,137,283**
Market Value	**510,636,492**	**6,497,275**	**517,133,767**
BUSINESS PERSONAL PROPERTY	(0)	(0)	(0)
Market Value	**0**	**0**	**0**
OIL & GAS / MINERALS	(0)	(0)	(0)
Market Value	**0**	**0**	**0**
OTHER (Intangibles)	(0)	(0)	(0)
Market Value	**0**	**0**	**0**
	(Total Count) (1,252)	(Total Count) (19)	(Total Count) (1,271)
TOTAL MARKET	**510,636,492**	**6,497,275**	**517,133,767**
Ag Productivity	702,810	0	702,810
Ag Loss (-)	24,293,718	0	24,293,718
Timber Productivity	0	0	0
Timber Loss (-)	0	0	0
APPRAISED VALUE	**486,342,774**	**6,497,275**	**492,840,049**
	98.7%	1.3%	100.0%
HS CAP Limitation Value (-)	3,413,387	176,178	3,589,565
CB CAP Limitation Value (-)	1,426,827	2,450	1,429,277
NET APPRAISED VALUE	**481,502,560**	**6,318,647**	**487,821,207**
Total Exemption Amount	135,379,513	349,221	135,728,734
NET TAXABLE	**346,123,047**	**5,969,426**	**352,092,473**
TAX LIMIT/FREEZE ADJUSTMENT	**3,172,258**	**0**	**3,172,258**
LIMIT ADJ TAXABLE (I&S)	**342,950,789**	**5,969,426**	**348,920,215**
CHAPTER 312 ADJUSTMENT	**0**	**0**	**0**
CHAPTER 313 ADJUSTMENT	**0**	**0**	**0**
LIMIT ADJ TAXABLE (M&O)	**342,950,789**	**5,969,426**	**348,920,215**

APPROX TOTAL LEVY = LIMIT ADJ TAXABLE * (TAX RATE / 100) + ACTUAL TAX

$0 = 348,920,215 * (0.000000 / 100) + $0

MCALLEN TAX INCREMENT ZONE 1

Tax Limit Adjustment Breakdown

(Freeze)

NOT UNDER REVIEW

Limitation	Net Appr	Taxable	Act Tax	Ceiling	Count
OV65	3,690,708	3,172,258	0	0	10
Total	3,690,708	3,172,258	0	0	10

Tax Rate: 0.000000

UNDER REVIEW

TOTAL

Limitation	Net Appr	Taxable	Act Tax	Ceiling	Count
OV65	3,690,708	3,172,258	0	0	10
Total	3,690,708	3,172,258	0	0	10

Tax Rate: 0.000000

MCALLEN TAX INCREMENT ZONE 1

Exemptions

EXEMPTIONS	NOT UNDER REVIEW		UNDER REVIEW		TOTAL	
Exemption	Total	Count	Total	Count	Total	Count
Homestead Exemptions						
OV65-Local	600,000	70	20,000	2	620,000	72
OV65-State	0	0	0	0	0	0
OV65-Prorated	0	0	0	0	0	0
DP-Local	30,000	3	0	0	30,000	3
DP-State	0	0	0	0	0	0
DP-Prorated	0	0	0	0	0	0
DVHS	31,910,073	77	319,221	1	32,229,294	78
DVHS-Prorated	2,214,053	7	0	0	2,214,053	7
DVHSS	595,192	1	0	0	595,192	1
DVHSS-Prorated	0	0	0	0	0	0
Subtotal for Homestead Exemptions	**35,349,318**	**158**	**339,221**	**3**	**35,688,539**	**161**
Disabled Veterans Exemptions						
DV1	5,000	1	0	0	5,000	1
DV2	27,000	3	0	0	27,000	3
DV3	20,000	2	10,000	1	30,000	3
DV4	312,000	26	0	0	312,000	26
Subtotal for Disabled Veterans Exemptions	**364,000**	**32**	**10,000**	**1**	**374,000**	**33**
Absolute Exemptions						
EX-XV	99,666,195	91	0	0	99,666,195	91
EX-XV-PRORATED	0	0	0	0	0	0
Subtotal for Absolute Exemptions	**99,666,195**	**91**	**0**	**0**	**99,666,195**	**91**
Total:	**135,379,513**	**281**	**349,221**	**4**	**135,728,734**	**285**

MCALLEN TAX INCREMENT ZONE 1

No-New-Revenue Tax Rate Assumption

New Value

Total New Market Value: $50,508,340

Total New Taxable Value: $46,087,245

JETI

New Market Value: $0

New Taxable Value: $0

Chapter 313

New Market Value: $0

New Taxable Value: $0

Exemption Loss

New Absolute Exemptions

Exemption	Description	Count	Last Year Market Value
EX-XV	Other Exemptions (including public property, reli...	2	637,588
Absolute Exemption Value Loss:		**2**	**637,588**

New Partial Exemptions

Exemption	Description	Count	Partial Exemption Amt
DV4	Disabled Veterans 70% - 100%	6	72,000
DVHS	Disabled Veteran Homestead	9	3,311,218
OV65	Over 65	12	110,000
Partial Exemption Value Loss:		**27**	**3,493,218**
Total NEW Exemption Value			**4,130,806**

Increased Exemptions

Exemption	Description	Count	Increased Exemption Amt
Increased Exemption Value Loss:		**0**	**0**
Total Exemption Value Loss:			**4,130,806**

Average Homestead Value

Category	Count of HS	Average Market	Average Exemption	Average Taxable
A Only	601	393,043	56,667	330,403
A & E	601	393,043	56,667	330,403

Property Under Review - Lower Value Used

Count	Market Value	Lower Market Value	Estimated Lower Taxable Value
19	6,497,275	5,700,565	5,229,427

MCALLEN TAX INCREMENT ZONE 1

State Category Breakdown

Not Under Review

Code	Description	Count	Acres	New Value	Market Value	Taxable Value
A	Single-family Residential	880		40,792,395	342,313,126	302,532,012
C1	Vacant Lots and Tracts	130		0	21,161,109	20,839,773
D1	Qualified Open-Space Land	10	1,748.08	0	24,996,528	702,810
D2	Farm or Ranch Improvements on Qualified	1		0	0	0
E	Rural Land,Not Qualified for Open-Space Land	2		0	921,239	921,239
F1	Commercial Real Property	10		1,449,015	8,029,660	7,964,965
O	Residential Inventory	138		7,286,784	13,548,635	13,162,248
XV	Other Totally Exempt Properties (including	91		980,146	99,666,195	0
		Totals:	1,748.08	50,508,340	510,636,492	346,123,047

MCALLEN TAX INCREMENT ZONE 1

State Category Breakdown

Under Review

Code	Description	Count	Acres	New Value	Market Value	Taxable Value
A	Single-family Residential	18		0	6,315,736	5,790,337
C1	Vacant Lots and Tracts	1		0	181,539	179,089
		Totals:	0	0	6,497,275	5,969,426

MCALLEN TAX INCREMENT ZONE 1

State Category Breakdown

Grand Totals

Code	Description	Count	Acres	New Value	Market Value	Taxable Value
A	Single-family Residential	898		40,792,395	348,628,862	308,322,349
C1	Vacant Lots and Tracts	131		0	21,342,648	21,018,862
D1	Qualified Open-Space Land	10	1,748.08	0	24,996,528	702,810
D2	Farm or Ranch Improvements on Qualified	1		0	0	0
E	Rural Land,Not Qualified for Open-Space Land	2		0	921,239	921,239
F1	Commercial Real Property	10		1,449,015	8,029,660	7,964,965
O	Residential Inventory	138		7,286,784	13,548,635	13,162,248
XV	Other Totally Exempt Properties (including	91		980,146	99,666,195	0
		Totals:	1,748.08	50,508,340	517,133,767	352,092,473

MCALLEN TAX INCREMENT ZONE 1

Top Taxpayers

Rank	Owner ID	Taxpayer Name	Market Value	Taxable Value
1	1242584	BELTERRA AT TRES LAGOS LLC	$16,254,993	$16,254,993
2	1205467	SHOPPES AT TRES LAGOS LLC	$7,443,110	$7,443,110
3	1309384	ESPERANZA HOMES MCALLEN LLC	$6,307,174	$6,307,174
4	1197651	ESPERANZA HOMES MCALLEN LLC	$3,056,119	$3,056,119
5	1101652	RHODES ENTERPRISES LTD	$3,921,857	$2,688,137
6	452528	ML RHODES LTD	$23,776,914	$2,198,347
7	1198088	ELIZONDO NICOLES & ONEIDA	$2,494,305	$1,951,487
8	1072321	PEDROZA LUIS GUILLERMO P	$1,627,175	$1,627,175
9	1210878	FRU FELIX AZENWI & RELINDIS NEH	$1,567,159	$1,567,159
10	1194852	GOMEZ OSCAR & GABRIELA	$1,469,242	$1,377,543
11	1296124	MOSQUEDA JENNIFER YAMILETH	$1,373,670	$1,373,670
12	1256806	ARNOLD DOMINIQUE KARL	$1,303,717	$1,303,717
13	1101204	GARZA RANDY LEE	$1,260,529	$1,260,529
14	1171868	QUINTANILLA MOYRA & RAMIRO	$1,227,937	$1,227,937
15	1197322	ESPERANZA HOMES MISSION LLC	$1,073,135	$1,073,135
16	1158851	MAGDALENO LUIS M & AMANDA N	$1,065,936	$1,065,936
17	1268983	GARZA RODOLFO	$1,045,228	$1,045,228
18	1243150	JONES RANDY KEITH & CATHERINE	$1,176,758	$1,027,400
19	1227803	GUTIERREZ AMY LYNN & OLIVER	$985,746	$985,746
20	1297730	SESIN RAUL	$962,024	$962,024
		Total	$79,392,728	$55,796,566

MCALLEN CITY TAX INCREMENT ZONE

	NOT UNDER REVIEW	UNDER REVIEW	TOTAL
REAL PROPERTY & MFT HOMES	(Count) (1,585)	(Count) (56)	(Count) (1,641)
Land HS Value	27,028,099	638,152	27,666,251
Land NHS Value	388,338,378	1,836,239	390,174,617
Land Ag Market Value	30,198,452	0	30,198,452
Land Timber Market Value	0	0	0
Total Land Value	**445,564,929**	**2,474,391**	**448,039,320**
Improvement HS Value	63,732,083	1,777,754	65,509,837
Improvement NHS Value	719,978,593	5,634,185	725,612,778
Total Improvement	**783,710,676**	**7,411,939**	**791,122,615**
Market Value	**1,229,275,605**	**9,886,330**	**1,239,161,935**
BUSINESS PERSONAL PROPERTY	(0)	(0)	(0)
Market Value	**0**	**0**	**0**
OIL & GAS / MINERALS	(0)	(0)	(0)
Market Value	**0**	**0**	**0**
OTHER (Intangibles)	(0)	(0)	(0)
Market Value	**0**	**0**	**0**
	(Total Count) (1,585)	(Total Count) (56)	(Total Count) (1,641)
TOTAL MARKET	**1,229,275,605**	**9,886,330**	**1,239,161,935**
Ag Productivity	45,643	0	45,643
Ag Loss (-)	30,152,809	0	30,152,809
Timber Productivity	0	0	0
Timber Loss (-)	0	0	0
APPRAISED VALUE	**1,199,122,796**	**9,886,330**	**1,209,009,126**
	99.2%	0.8%	100.0%
HS CAP Limitation Value (-)	6,966,954	396,477	7,363,431
CB CAP Limitation Value (-)	13,153,231	128,149	13,281,380
NET APPRAISED VALUE	**1,179,002,611**	**9,361,704**	**1,188,364,315**
Total Exemption Amount	109,987,583	50,000	110,037,583
NET TAXABLE	**1,069,015,028**	**9,311,704**	**1,078,326,732**
TAX LIMIT/FREEZE ADJUSTMENT	**1,594,460**	**0**	**1,594,460**
LIMIT ADJ TAXABLE (I&S)	**1,067,420,568**	**9,311,704**	**1,076,732,272**
CHAPTER 312 ADJUSTMENT	**0**	**0**	**0**
CHAPTER 313 ADJUSTMENT	**0**	**0**	**0**
LIMIT ADJ TAXABLE (M&O)	**1,067,420,568**	**9,311,704**	**1,076,732,272**

APPROX TOTAL LEVY = LIMIT ADJ TAXABLE * (TAX RATE / 100) + ACTUAL TAX

$0 = 1,076,732,272 * (0.000000 / 100) + $0

MCALLEN CITY TAX INCREMENT ZONE

Tax Limit Adjustment Breakdown

(Freeze)

NOT UNDER REVIEW

Limitation	Net Appr	Taxable	Act Tax	Ceiling	Count
OV65	1,676,460	1,594,460	0	0	7
Total	1,676,460	1,594,460	0	0	7

Tax Rate: 0.000000

UNDER REVIEW

TOTAL

Limitation	Net Appr	Taxable	Act Tax	Ceiling	Count
OV65	1,676,460	1,594,460	0	0	7
Total	1,676,460	1,594,460	0	0	7

Tax Rate: 0.000000

MCALLEN CITY TAX INCREMENT ZONE

Exemptions

EXEMPTIONS	NOT UNDER REVIEW		UNDER REVIEW		TOTAL	
Exemption	Total	Count	Total	Count	Total	Count
Homestead Exemptions						
OV65-Local	1,530,000	162	50,000	5	1,580,000	167
OV65-State	0	0	0	0	0	0
OV65-Prorated	0	0	0	0	0	0
OV65S-Local	90,000	9	0	0	90,000	9
OV65S-State	0	0	0	0	0	0
OV65S-Prorated	0	0	0	0	0	0
DP-Local	50,000	5	0	0	50,000	5
DP-State	0	0	0	0	0	0
DP-Prorated	0	0	0	0	0	0
DVHS	2,443,881	11	0	0	2,443,881	11
DVHS-Prorated	0	0	0	0	0	0
DVHSS	99,530	1	0	0	99,530	1
DVHSS-Prorated	0	0	0	0	0	0
Subtotal for Homestead Exemptions	**4,213,411**	**188**	**50,000**	**5**	**4,263,411**	**193**
Disabled Veterans Exemptions						
DV1S	5,000	1	0	0	5,000	1
DV4	84,000	7	0	0	84,000	7
DV4S	12,000	1	0	0	12,000	1
Subtotal for Disabled Veterans Exemptions	**101,000**	**9**	**0**	**0**	**101,000**	**9**
Special Exemptions						
EX-11.35 2	34,904	1	0	0	34,904	1
EX-11.35 2 PRORATED	0	0	0	0	0	0
Subtotal for Special Exemptions	**34,904**	**1**	**0**	**0**	**34,904**	**1**
Absolute Exemptions						
EX-XV	105,638,268	65	0	0	105,638,268	65
EX-XV-PRORATED	0	0	0	0	0	0
Subtotal for Absolute Exemptions	**105,638,268**	**65**	**0**	**0**	**105,638,268**	**65**
Total:	**109,987,583**	**263**	**50,000**	**5**	**110,037,583**	**268**

New Value

Total New Market Value: $16,041,419

Total New Taxable Value: $16,041,419

JETI

New Market Value: $0

New Taxable Value: $0

Chapter 313

New Market Value: $0

New Taxable Value: $0

Exemption Loss

New Absolute Exemptions

Exemption	Description	Count	Last Year Market Value
EX-11.35 2	Level II Damage Assessment Rating	1	182,993
Absolute Exemption Value Loss:		**1**	**182,993**

New Partial Exemptions

Exemption	Description	Count	Partial Exemption Amt
DV1S	Disabled Veterans Surviving Spouse 10% - 29%	1	5,000
DV4	Disabled Veterans 70% - 100%	2	24,000
OV65	Over 65	3	30,000
OV65S	OV65 Surviving Spouse	1	10,000
Partial Exemption Value Loss:		**7**	**69,000**
Total NEW Exemption Value			**251,993**

Increased Exemptions

Exemption	Description	Count	Increased Exemption Amt
Increased Exemption Value Loss:		**0**	**0**
Total Exemption Value Loss:			**251,993**

Average Homestead Value

Category	Count of HS	Average Market	Average Exemption	Average Taxable
A Only	391	233,949	6,250	209,985
A & E	391	233,949	6,250	209,985

Property Under Review - Lower Value Used

Count	Market Value	Lower Market Value	Estimated Lower Taxable Value
56	9,886,330	6,751,641	6,427,721

Not Under Review

Code	Description	Count	Acres	New Value	Market Value	Taxable Value
A	Single-family Residential	803		2,543,481	174,832,940	163,282,030
B	Multifamily Residential	102		809,869	102,381,396	97,787,151
C1	Vacant Lots and Tracts	200		0	32,593,851	32,010,474
C2	Colonia Lots and Land Tracts	1		0	541,015	389,532
D1	Qualified Open-Space Land	49	119.8	0	30,198,452	45,643
E	Rural Land,Not Qualified for Open-Space Land	3		0	1,348,878	1,348,878
F1	Commercial Real Property	372		9,972,035	781,526,202	773,936,717
J3	Electric Companies (including Co-ops)	1		0	214,603	214,603
XV	Other Totally Exempt Properties (including	68		0	105,638,268	0
		Totals:	119.8	13,325,385	1,229,275,605	1,069,015,028

MCALLEN CITY TAX INCREMENT ZONE

State Category Breakdown

Under Review

Code	Description	Count	Acres	New Value	Market Value	Taxable Value
A	Single-family Residential	54		2,716,034	9,529,336	8,954,710
C1	Vacant Lots and Tracts	1		0	41,860	41,860
F1	Commercial Real Property	1		0	315,134	315,134
		Totals:	0	2,716,034	9,886,330	9,311,704

Grand Totals

Code	Description	Count	Acres	New Value	Market Value	Taxable Value
A	Single-family Residential	857		5,259,515	184,362,276	172,236,740
B	Multifamily Residential	102		809,869	102,381,396	97,787,151
C1	Vacant Lots and Tracts	201		0	32,635,711	32,052,334
C2	Colonia Lots and Land Tracts	1		0	541,015	389,532
D1	Qualified Open-Space Land	49	119.8	0	30,198,452	45,643
E	Rural Land,Not Qualified for Open-Space Land	3		0	1,348,878	1,348,878
F1	Commercial Real Property	373		9,972,035	781,841,336	774,251,851
J3	Electric Companies (including Co-ops)	1		0	214,603	214,603
XV	Other Totally Exempt Properties (including	68		0	105,638,268	0
		Totals:	119.8	16,041,419	1,239,161,935	1,078,326,732

Rank	Owner ID	Taxpayer Name	Market Value	Taxable Value
1	331196	SIMON PROPERTY GROUP-MCALLEN NO	$160,092,113	$160,092,113
2	1050016	LA PLAZA MALL LLC	$57,242,301	$57,242,301
3	1065364	SHOPS AT 29 LTD	$34,605,138	$34,509,469
4	1063617	RIO BANK	$27,311,907	$27,128,829
5	1295332	DILLARD TEXAS SOUTH LLC	$21,679,851	$21,679,851
6	552588	WEINGARTEN LAS TIENDAS JV	$21,544,468	$21,544,468
7	548804	HIC TEXAS II LLC	$21,000,000	$21,000,000
8	457413	MCALLEN HOSPITALS LP	$17,000,000	$17,000,000
9	1178692	MACY'S MALL REAL ESTATE LLC	$13,773,562	$13,773,562
10	1146754	JACKSON-HOUSTON EAST LTD	$12,470,801	$12,470,801
11	1177035	WRI JACKSON WEST LP	$11,269,412	$11,269,412
12	266179	DAYTON HUDSON CORP	$10,935,387	$10,935,387
13	1227571	RGV PORTFOLIO LLC	$10,765,876	$10,765,876
14	1195263	WHITEFISH VENTURES LLC &	$9,898,229	$9,898,229
15	312083	MCALLEN 83 MCCOLL INC	$9,297,548	$9,297,548
16	1285883	SAVANNAH HEIGHTS INVESTMENTS LLC	$8,750,000	$8,750,000
17	1082148	MCALLEN HOSPITALITY LLC	$8,612,130	$8,612,130
18	1230533	HIGH FOUR INVESTMENT LLC	$8,380,000	$8,380,000
19	1071629	RRDM NEVADA HOLDINGS LLC	$8,303,846	$8,303,846
20	133417	TRI-VEST INC	$7,338,832	$7,338,832
		Total	$480,271,401	$479,992,654

MISSION TAX INCREMENT ZONE 1

	NOT UNDER REVIEW	UNDER REVIEW	TOTAL
REAL PROPERTY & MFT HOMES	(Count) (3,247)	(Count) (76)	(Count) (3,323)
Land HS Value	99,056,727	2,961,954	102,018,681
Land NHS Value	241,837,430	2,394,971	244,232,401
Land Ag Market Value	55,292,420	0	55,292,420
Land Timber Market Value	0	0	0
Total Land Value	**396,186,577**	**5,356,925**	**401,543,502**
Improvement HS Value	319,386,432	9,871,806	329,258,238
Improvement NHS Value	473,421,002	24,137,319	497,558,321
Total Improvement	**792,807,434**	**34,009,125**	**826,816,559**
Market Value	**1,188,994,011**	**39,366,050**	**1,228,360,061**
BUSINESS PERSONAL PROPERTY	(0)	(0)	(0)
Market Value	**0**	**0**	**0**
OIL & GAS / MINERALS	(0)	(0)	(0)
Market Value	**0**	**0**	**0**
OTHER (Intangibles)	(0)	(0)	(0)
Market Value	**0**	**0**	**0**
	(Total Count) (3,247)	(Total Count) (76)	(Total Count) (3,323)
TOTAL MARKET	**1,188,994,011**	**39,366,050**	**1,228,360,061**
Ag Productivity	1,036,377	0	1,036,377
Ag Loss (-)	54,256,043	0	54,256,043
Timber Productivity	0	0	0
Timber Loss (-)	0	0	0
APPRAISED VALUE	**1,134,737,968**	**39,366,050**	**1,174,104,018**
	96.5%	3.5%	100.0%
HS CAP Limitation Value (-)	12,838,280	851,121	13,689,401
CB CAP Limitation Value (-)	15,101,220	659,328	15,760,548
NET APPRAISED VALUE	**1,106,798,468**	**37,855,601**	**1,144,654,069**
Total Exemption Amount	119,428,239	12,000	119,440,239
NET TAXABLE	**987,370,229**	**37,843,601**	**1,025,213,830**
TAX LIMIT/FREEZE ADJUSTMENT	**22,054,594**	**0**	**22,054,594**
LIMIT ADJ TAXABLE (I&S)	**965,315,635**	**37,843,601**	**1,003,159,236**
CHAPTER 312 ADJUSTMENT	**0**	**0**	**0**
CHAPTER 313 ADJUSTMENT	**0**	**0**	**0**
LIMIT ADJ TAXABLE (M&O)	**965,315,635**	**37,843,601**	**1,003,159,236**

APPROX TOTAL LEVY = LIMIT ADJ TAXABLE * (TAX RATE / 100) + ACTUAL TAX
$0 = 1,010,815,741 * (0.000000 / 100) + $0

APPROX TOTAL LEVY = LIMIT ADJ TAXABLE * (TAX RATE / 100) + ACTUAL TAX
$0 = 1,013,864,033 * (0.000000 / 100) + $0

MISSION TAX INCREMENT ZONE 1

Tax Limit Adjustment Breakdown

(Freeze)

NOT UNDER REVIEW

Limitation	Net Appr	Taxable	Act Tax	Ceiling	Count
DP	592,207	592,207	0	0	3
OV65	11,490,863	10,112,590	0	0	48
DP	592,207	562,207	0	0	3
OV65	11,490,863	10,787,590	0	0	48
Total	24,166,140	22,054,594	0	0	102

Tax Rate: 0.000000

UNDER REVIEW

TOTAL

Limitation	Net Appr	Taxable	Act Tax	Ceiling	Count
DP	592,207	592,207	0	0	3
OV65	11,490,863	10,112,590	0	0	48
DP	592,207	562,207	0	0	3
OV65	11,490,863	10,787,590	0	0	48
Total	24,166,140	22,054,594	0	0	102

Tax Rate: 0.000000

MISSION TAX INCREMENT ZONE 1

Exemptions

EXEMPTIONS	NOT UNDER REVIEW		UNDER REVIEW		TOTAL	
Exemption	Total	Count	Total	Count	Total	Count
Homestead Exemptions						
OV65S-Local	90,000	10	0	0	90,000	10
OV65S-State	0	0	0	0	0	0
OV65S-Prorated	0	0	0	0	0	0
DP-Local	190,000	21	0	0	190,000	21
DP-State	0	0	0	0	0	0
DP-Prorated	0	0	0	0	0	0
DVHS	21,328,360	70	0	0	21,328,360	70
DVHS-Prorated	674,476	2	0	0	674,476	2
DVHSS	514,757	2	0	0	514,757	2
DVHSS-Prorated	0	0	0	0	0	0
Subtotal for Homestead Exemptions	**22,797,593**	**105**	**0**	**0**	**22,797,593**	**105**
Disabled Veterans Exemptions						
DV1	70,000	7	0	0	70,000	7
DV2	58,500	6	0	0	58,500	6
DV3	72,000	7	0	0	72,000	7
DV4	204,000	17	12,000	1	216,000	18
Subtotal for Disabled Veterans Exemptions	**404,500**	**37**	**12,000**	**1**	**416,500**	**38**
Absolute Exemptions						
EX-XV	96,226,146	123	0	0	96,226,146	123
EX-XV-PRORATED	0	0	0	0	0	0
Subtotal for Absolute Exemptions	**96,226,146**	**123**	**0**	**0**	**96,226,146**	**123**
Total:	**119,428,239**	**265**	**12,000**	**1**	**119,440,239**	**266**

MISSION TAX INCREMENT ZONE 1

No-New-Revenue Tax Rate Assumption

New Value

Total New Market Value: $22,760,567

Total New Taxable Value: $20,602,021

JETI

New Market Value: $0

New Taxable Value: $0

Chapter 313

New Market Value: $0

New Taxable Value: $0

Exemption Loss

New Absolute Exemptions

Exemption	Description	Count	Last Year Market Value
Absolute Exemption Value Loss:		**0**	**0**

New Partial Exemptions

Exemption	Description	Count	Partial Exemption Amt
DV1	Disabled Veterans 10% - 29%	1	12,000
DV4	Disabled Veterans 70% - 100%	2	24,000
DVHS	Disabled Veteran Homestead	11	3,471,766
OV65	Over 65	22	298,890
DV1	Disabled Veterans 10% - 29%	1	12,000
DV4	Disabled Veterans 70% - 100%	2	24,000
DVHS	Disabled Veteran Homestead	11	3,471,766
Partial Exemption Value Loss:		**50**	**7,314,422**
Total NEW Exemption Value			**7,314,422**

Increased Exemptions

Exemption	Description	Count	Increased Exemption Amt
Increased Exemption Value Loss:		**0**	**0**
Total Exemption Value Loss:			**7,314,422**

Average Homestead Value

Category	Count of HS	Average Market	Average Exemption	Average Taxable
A Only	1,481	290,351	14,857	266,251
A & E	1,483	290,276	14,837	266,209
A Only	1,481	290,351	14,857	266,251
A & E	1,483	290,276	14,837	266,209

Property Under Review - Lower Value Used

Count	Market Value	Lower Market Value	Estimated Lower Taxable Value
76	39,366,050	33,475,602	32,392,626
76	39,366,050	33,475,602	32,440,839

MISSION TAX INCREMENT ZONE 1

No-New-Revenue Tax Rate Assumption

New Value

Total New Market Value: $22,760,567

Total New Taxable Value: $20,707,223

JETI

New Market Value: $0

New Taxable Value: $0

Chapter 313

New Market Value: $0

New Taxable Value: $0

Exemption Loss

New Absolute Exemptions

Exemption	Description	Count	Last Year Market Value
Absolute Exemption Value Loss:		**0**	**0**

New Partial Exemptions

Exemption	Description	Count	Partial Exemption Amt
DV1	Disabled Veterans 10% - 29%	1	12,000
DV4	Disabled Veterans 70% - 100%	2	24,000
DVHS	Disabled Veteran Homestead	11	3,471,766
OV65	Over 65	22	298,890
DV1	Disabled Veterans 10% - 29%	1	12,000
DV4	Disabled Veterans 70% - 100%	2	24,000
DVHS	Disabled Veteran Homestead	11	3,471,766
Partial Exemption Value Loss:		**50**	**7,314,422**
Total NEW Exemption Value			**7,314,422**

Increased Exemptions

Exemption	Description	Count	Increased Exemption Amt
Increased Exemption Value Loss:		**0**	**0**
Total Exemption Value Loss:			**7,314,422**

Average Homestead Value

Category	Count of HS	Average Market	Average Exemption	Average Taxable
A Only	1,481	290,351	14,857	266,251
A & E	1,483	290,276	14,837	266,209
A Only	1,481	290,351	14,857	266,251
A & E	1,483	290,276	14,837	266,209

Property Under Review - Lower Value Used

Count	Market Value	Lower Market Value	Estimated Lower Taxable Value
76	39,366,050	33,475,602	32,392,626
76	39,366,050	33,475,602	32,440,839

MISSION TAX INCREMENT ZONE 1

State Category Breakdown

Not Under Review

Code	Description	Count	Acres	New Value	Market Value	Taxable Value
A	Single-family Residential	2,354		18,004,142	647,153,547	607,926,821
B	Multifamily Residential	11		0	98,013,867	97,936,055
C1	Vacant Lots and Tracts	293		0	41,858,563	37,642,717
D1	Qualified Open-Space Land	81	2,645.59	0	55,292,420	1,036,377
D2	Farm or Ranch Improvements on Qualified	2		0	57,909	57,909
E	Rural Land,Not Qualified for Open-Space Land	9		0	2,681,949	2,539,811
F1	Commercial Real Property	259		2,179,200	237,008,296	230,095,313
J4	Telephone Companies (including Co-ops)	2		0	1,449,867	1,281,207
J5	Railroads	2		0	254,703	229,778
O	Residential Inventory	172		2,337,856	8,996,744	8,624,241
XV	Other Totally Exempt Properties (including	125		0	96,226,146	0
		Totals:	2,645.59	22,521,198	1,188,994,011	987,370,229

MISSION TAX INCREMENT ZONE 1

State Category Breakdown

Under Review

Code	Description	Count	Acres	New Value	Market Value	Taxable Value
A	Single-family Residential	71		239,369	16,973,165	15,847,869
C1	Vacant Lots and Tracts	3		0	244,915	165,434
F1	Commercial Real Property	4		0	22,147,970	21,830,298
		Totals:	0	239,369	39,366,050	37,843,601

MISSION TAX INCREMENT ZONE 1

State Category Breakdown

Grand Totals

Code	Description	Count	Acres	New Value	Market Value	Taxable Value
A	Single-family Residential	2,425		18,243,511	664,126,712	623,774,690
B	Multifamily Residential	11		0	98,013,867	97,936,055
C1	Vacant Lots and Tracts	296		0	42,103,478	37,808,151
D1	Qualified Open-Space Land	81	2,645.59	0	55,292,420	1,036,377
D2	Farm or Ranch Improvements on Qualified	2		0	57,909	57,909
E	Rural Land,Not Qualified for Open-Space Land	9		0	2,681,949	2,539,811
F1	Commercial Real Property	263		2,179,200	259,156,266	251,925,611
J4	Telephone Companies (including Co-ops)	2		0	1,449,867	1,281,207
J5	Railroads	2		0	254,703	229,778
O	Residential Inventory	172		2,337,856	8,996,744	8,624,241
XV	Other Totally Exempt Properties (including	125		0	96,226,146	0
		Totals:	2,645.59	22,760,567	1,228,360,061	1,025,213,830

MISSION TAX INCREMENT ZONE 1

Top Taxpayers

Rank	Owner ID	Taxpayer Name	Market Value	Taxable Value
1	641983	SHARY RETAIL LTD	$45,745,343	$45,745,343
2	1271171	SAN PEDRO VV LLC	$24,896,860	$24,896,860
3	1004018	ROYAL TECHNOLOGIES CORP	$20,981,901	$20,981,901
4	1042646	SANTA LUCIA AT BENTSEN LAKES LLC	$17,726,380	$17,726,380
5	1195686	PLANTATION MISSION LLC	$14,563,779	$14,563,779
6	1089750	BIG SKY COMMERICAL PROPERTY	$11,816,834	$11,816,834
7	628875	COLORADO MISSION PARTNERSHIP LTD	$11,722,735	$11,722,735
8	1276444	SUN VALLEY INTERNATIONAL LLC	$9,808,750	$9,808,750
9	654253	TARGET CORPORATION	$9,796,507	$9,796,507
10	1168363	CHARCO LAND SALES LLC	$33,589,757	$9,231,503
11	1193398	PLANTATION MISSION LLC	$8,553,330	$8,553,330
12	1266976	VICTORIA HEIGHTS LLC	$6,466,000	$6,466,000
13	1042607	GALENA ENTERPRISES LLC	$6,250,000	$6,250,000
14	1167713	CASCADE REAL ESTATE OPERATING No	$5,854,389	$5,824,285
15	1197322	ESPERANZA HOMES MISSION LLC	$6,057,295	$5,200,720
16	1226668	SIMRAN HOSPITALITY LLC	$4,869,853	$4,869,853
17	1027399	WAL-MART REAL ESTATE	$4,422,856	$4,422,856
18	1133440	BLIZZARD SHELLED TECHNOLOGY INC	$4,127,420	$4,127,420
19	1222196	MISSION TERRACE APARTMENTS LLC	$4,050,000	$4,050,000
20	1235180	DEVINE PLACE LLC	$4,050,000	$4,050,000
		Total	$255,349,989	$230,105,056

MISSION TAX INCREMENT ZONE 2

	NOT UNDER REVIEW	UNDER REVIEW	TOTAL
REAL PROPERTY & MFT HOMES	(Count) (7)	(Count) (0)	(Count) (7)
Land HS Value	0	0	0
Land NHS Value	640,951	0	640,951
Land Ag Market Value	1,681,820	0	1,681,820
Land Timber Market Value	0	0	0
Total Land Value	**2,322,771**	**0**	**2,322,771**
Improvement HS Value	0	0	0
Improvement NHS Value	0	0	0
Total Improvement	**0**	**0**	**0**
Market Value	**2,322,771**	**0**	**2,322,771**
BUSINESS PERSONAL PROPERTY	(0)	(0)	(0)
Market Value	**0**	**0**	**0**
OIL & GAS / MINERALS	(0)	(0)	(0)
Market Value	**0**	**0**	**0**
OTHER (Intangibles)	(0)	(0)	(0)
Market Value	**0**	**0**	**0**
	(Total Count) (7)	(Total Count) (0)	(Total Count) (7)
TOTAL MARKET	**2,322,771**	**0**	**2,322,771**
Ag Productivity	30,525	0	30,525
Ag Loss (-)	1,651,295	0	1,651,295
Timber Productivity	0	0	0
Timber Loss (-)	0	0	0
APPRAISED VALUE	**671,476**	**0**	**671,476**
	100.0%	0.0%	100.0%
HS CAP Limitation Value (-)	0	0	0
CB CAP Limitation Value (-)	0	0	0
NET APPRAISED VALUE	**671,476**	**0**	**671,476**
Total Exemption Amount	8,821	0	8,821
NET TAXABLE	**662,655**	**0**	**662,655**
TAX LIMIT/FREEZE ADJUSTMENT	**0**	**0**	**0**
LIMIT ADJ TAXABLE (I&S)	**662,655**	**0**	**662,655**
CHAPTER 312 ADJUSTMENT	**0**	**0**	**0**
CHAPTER 313 ADJUSTMENT	**0**	**0**	**0**
LIMIT ADJ TAXABLE (M&O)	**662,655**	**0**	**662,655**

APPROX TOTAL LEVY = NET TAXABLE * (TAX RATE / 100)

$0 = 662,655 * (0.000000 / 100)

MISSION TAX INCREMENT ZONE 2

Exemptions

EXEMPTIONS	NOT UNDER REVIEW		UNDER REVIEW		TOTAL	
Exemption	Total	Count	Total	Count	Total	Count
Absolute Exemptions						
EX-XV	8,821	1	0	0	8,821	1
EX-XV-PRORATED	0	0	0	0	0	0
Subtotal for Absolute Exemptions	**8,821**	**1**	**0**	**0**	**8,821**	**1**
Total:	**8,821**	**1**	**0**	**0**	**8,821**	**1**

MISSION TAX INCREMENT ZONE 2

No-New-Revenue Tax Rate Assumption

New Value

Total New Market Value: $0

Total New Taxable Value: $0

JETI

New Market Value: $0

New Taxable Value: $0

Chapter 313

New Market Value: $0

New Taxable Value: $0

Exemption Loss

New Absolute Exemptions

Exemption	Description	Count	Last Year Market Value
Absolute Exemption Value Loss:		**0**	**0**

New Partial Exemptions

Exemption	Description	Count	Partial Exemption Amt
Partial Exemption Value Loss:		**0**	**0**
Total NEW Exemption Value			**0**

Increased Exemptions

Exemption	Description	Count	Increased Exemption Amt
Increased Exemption Value Loss:		**0**	**0**
Total Exemption Value Loss:			**0**

MISSION TAX INCREMENT ZONE 2

State Category Breakdown

Not Under Review

Code	Description	Count	Acres	New Value	Market Value	Taxable Value
D1	Qualified Open-Space Land	5	82.04	0	1,681,820	30,525
F1	Commercial Real Property	1		0	632,130	632,130
XV	Other Totally Exempt Properties (including	1		0	8,821	0
		Totals:	82.04	0	2,322,771	662,655

MISSION TAX INCREMENT ZONE 2

State Category Breakdown

Under Review

Code	Description	Count	Acres	New Value	Market Value	Taxable Value
		Totals:				

MISSION TAX INCREMENT ZONE 2

State Category Breakdown

Grand Totals

Code	Description	Count	Acres	New Value	Market Value	Taxable Value
D1	Qualified Open-Space Land	5	82.04	0	1,681,820	30,525
F1	Commercial Real Property	1		0	632,130	632,130
XV	Other Totally Exempt Properties (including	1		0	8,821	0
		Totals:	82.04	0	2,322,771	662,655

MISSION TAX INCREMENT ZONE 2

Top Taxpayers

Rank	Owner ID	Taxpayer Name	Market Value	Taxable Value
1	1117532	BIG SKY COMMERCIAL PROPERTY	$632,130	$632,130
2	1168363	CHARCO LAND SALES LLC	$1,681,820	$30,525
3	48035	CITY OF MISSION	$8,821	$0
		Total	$2,322,771	$662,655

CITY OF PALMVIEW TAX INCREMENT

	NOT UNDER REVIEW	UNDER REVIEW	TOTAL
REAL PROPERTY & MFT HOMES	(Count) (189)	(Count) (2)	(Count) (191)
Land HS Value	2,981,674	0	2,981,674
Land NHS Value	29,484,073	192,374	29,676,447
Land Ag Market Value	5,046,857	0	5,046,857
Land Timber Market Value	0	0	0
Total Land Value	**37,512,604**	**192,374**	**37,704,978**
Improvement HS Value	7,056,599	0	7,056,599
Improvement NHS Value	32,831,855	76,634	32,908,489
Total Improvement	**39,888,454**	**76,634**	**39,965,088**
Market Value	**77,401,058**	**269,008**	**77,670,066**
BUSINESS PERSONAL PROPERTY	(0)	(0)	(0)
Market Value	**0**	**0**	**0**
OIL & GAS / MINERALS	(0)	(0)	(0)
Market Value	**0**	**0**	**0**
OTHER (Intangibles)	(0)	(0)	(0)
Market Value	**0**	**0**	**0**
	(Total Count) (189)	(Total Count) (2)	(Total Count) (191)
TOTAL MARKET	**77,401,058**	**269,008**	**77,670,066**
Ag Productivity	20,302	0	20,302
Ag Loss (-)	5,026,555	0	5,026,555
Timber Productivity	0	0	0
Timber Loss (-)	0	0	0
APPRAISED VALUE	**72,374,503**	**269,008**	**72,643,511**
	99.6%	0.4%	100.0%
HS CAP Limitation Value (-)	762,329	0	762,329
CB CAP Limitation Value (-)	2,881,582	41,849	2,923,431
NET APPRAISED VALUE	**68,730,592**	**227,159**	**68,957,751**
Total Exemption Amount	1,925,562	0	1,925,562
NET TAXABLE	**66,805,030**	**227,159**	**67,032,189**
TAX LIMIT/FREEZE ADJUSTMENT	**0**	**0**	**0**
LIMIT ADJ TAXABLE (I&S)	**66,805,030**	**227,159**	**67,032,189**
CHAPTER 312 ADJUSTMENT	**0**	**0**	**0**
CHAPTER 313 ADJUSTMENT	**0**	**0**	**0**
LIMIT ADJ TAXABLE (M&O)	**66,805,030**	**227,159**	**67,032,189**

APPROX TOTAL LEVY = NET TAXABLE * (TAX RATE / 100)

$0 = 67,032,189 * (0.000000 / 100)

CITY OF PALMVIEW TAX INCREMENT

Exemptions

EXEMPTIONS	NOT UNDER REVIEW		UNDER REVIEW		TOTAL	
Exemption	Total	Count	Total	Count	Total	Count
Homestead Exemptions						
OV65-Local	40,000	4	0	0	40,000	4
OV65-State	0	0	0	0	0	0
OV65-Prorated	0	0	0	0	0	0
Subtotal for Homestead Exemptions	**40,000**	**4**	**0**	**0**	**40,000**	**4**
Special Exemptions						
PC	162	1	0	0	162	1
Subtotal for Special Exemptions	**162**	**1**	**0**	**0**	**162**	**1**
Absolute Exemptions						
EX-XV	1,885,400	7	0	0	1,885,400	7
EX-XV-PRORATED	0	0	0	0	0	0
Subtotal for Absolute Exemptions	**1,885,400**	**7**	**0**	**0**	**1,885,400**	**7**
Total:	**1,925,562**	**12**	**0**	**0**	**1,925,562**	**12**

CITY OF PALMVIEW TAX INCREMENT

No-New-Revenue Tax Rate Assumption

New Value

Total New Market Value: $3,207,508

Total New Taxable Value: $3,207,508

JETI

New Market Value: $0

New Taxable Value: $0

Chapter 313

New Market Value: $0

New Taxable Value: $0

Exemption Loss

New Absolute Exemptions

Exemption	Description	Count	Last Year Market Value
EX-XV	Other Exemptions (including public property, reli...	5	0
Absolute Exemption Value Loss:		**5**	**0**

New Partial Exemptions

Exemption	Description	Count	Partial Exemption Amt
PC	Pollution Control (Special Exemption)	1	162
Partial Exemption Value Loss:		**1**	**162**
Total NEW Exemption Value			**162**

Increased Exemptions

Exemption	Description	Count	Increased Exemption Amt
Increased Exemption Value Loss:		**0**	**0**
Total Exemption Value Loss:			**162**

Average Homestead Value

Category	Count of HS	Average Market	Average Exemption	Average Taxable
A Only	25	367,250	0	342,842
A & E	28	358,510	0	331,284

Property Under Review - Lower Value Used

Count	Market Value	Lower Market Value	Estimated Lower Taxable Value
2	269,008	189,299	160,202

CITY OF PALMVIEW TAX INCREMENT

State Category Breakdown

Not Under Review

Code	Description	Count	Acres	New Value	Market Value	Taxable Value
A	Single-family Residential	56		1,820,697	19,003,834	18,272,571
B	Multifamily Residential	1		0	6,900,000	6,900,000
C1	Vacant Lots and Tracts	82		0	10,202,412	9,968,106
D1	Qualified Open-Space Land	10	53.99	0	5,046,857	20,302
D2	Farm or Ranch Improvements on Qualified	1		0	2,276	2,276
E	Rural Land,Not Qualified for Open-Space Land	6		0	1,284,443	1,122,299
F1	Commercial Real Property	38		1,386,811	33,075,836	30,519,476
XV	Other Totally Exempt Properties (including	7		0	1,885,400	0
		Totals:	53.99	3,207,508	77,401,058	66,805,030

CITY OF PALMVIEW TAX INCREMENT

State Category Breakdown

Under Review

Code	Description	Count	Acres	New Value	Market Value	Taxable Value
C1	Vacant Lots and Tracts	1		0	81,315	73,559
F1	Commercial Real Property	1		0	187,693	153,600
		Totals:	0	0	269,008	227,159

CITY OF PALMVIEW TAX INCREMENT

State Category Breakdown

Grand Totals

Code	Description	Count	Acres	New Value	Market Value	Taxable Value
A	Single-family Residential	56		1,820,697	19,003,834	18,272,571
B	Multifamily Residential	1		0	6,900,000	6,900,000
C1	Vacant Lots and Tracts	83		0	10,283,727	10,041,665
D1	Qualified Open-Space Land	10	53.99	0	5,046,857	20,302
D2	Farm or Ranch Improvements on Qualified	1		0	2,276	2,276
E	Rural Land,Not Qualified for Open-Space Land	6		0	1,284,443	1,122,299
F1	Commercial Real Property	39		1,386,811	33,263,529	30,673,076
XV	Other Totally Exempt Properties (including	7		0	1,885,400	0
		Totals:	53.99	3,207,508	77,670,066	67,032,189

CITY OF PALMVIEW TAX INCREMENT

Top Taxpayers

Rank	Owner ID	Taxpayer Name	Market Value	Taxable Value
1	1146908	PALMVIEW SPUR LP	$6,900,000	$6,900,000
2	277280	H E BUTT GROCERY COMPANY	$4,629,797	$4,629,635
3	505043	LORD & GONZALEZ LP	$4,242,935	$4,242,935
4	1302106	BENTSEN PARK LLC	$2,181,934	$2,181,934
5	1126689	PHARR FS LLC	$2,050,000	$2,050,000
6	1273128	VELA FAMILY GROUP LLC	$2,312,025	$1,986,811
7	1086879	CAGE I PLAZA LLC	$2,530,172	$1,868,244
8	488073	MERCADO ANTONIO E ET AL	$2,215,322	$1,676,840
9	1298733	CROSSING FOURTEEN LLC	$1,614,671	$1,614,671
10	989305	RREAL LLC	$1,189,650	$1,189,650
11	324667	GONZALEZ FEDERICO & GEMINA	$1,165,491	$1,165,491
12	1027907	MCALLEN INVESTMENT PARTNERS LTD	$1,019,438	$1,019,438
13	1312347	JAR GROUP ENTERPRISES LP	$1,112,852	$960,876
14	1192223	RODRIGUE ROBERT III & PATRICIA ANN	$955,739	$945,739
15	984886	LNC INVESTMENTS LLC	$948,911	$912,085
16	1076573	EL COFRE DEL TESORO LLC	$794,410	$794,410
17	1272121	NNN REIT LP	$759,367	$759,367
18	1237392	LAC ENTERPRISES LLC	$691,487	$691,487
19	663438	CHOPRA HOSPITALITY LLC	$715,000	$681,000
20	1098295	BLACK DIAMOND SERVICES LLC	$665,767	$665,767
		Total	$38,694,968	$36,936,380

AGENDA MEMORANDUM

BOARD: BOARD OF COMMISSIONERS

AGENDA ITEM #: 8.A.
DATE SUBMITTED: August 15, 2025
MEETING DATE: August 18, 2025

FROM: Juan Gonzalez, Police Chief

DEPARTMENT: Police

DIRECTOR: Juan Gonzalez

Agenda Item: Consideration and action, if any, authorizing Pharr Police Department to purchase two (2) self-sufficient surveillance mobile trailers using Operation LoneStar FY2025 Grant #5059901. **This item supports SSC - Safe and Secure Community**

Classification: Regular
(* If closed session, City Attorney must review and approve.)

Issue: Consideration and action authorizing the Pharr Police Department to purchase two surveillance mobile trailers by utilizing Operation LoneStar FY2025 Grant #5059901.**This item supports SSC - Safe and Secure Community**.

Fiscal Consideration: This purchase will be funded through Operation LoneStar FY2025 Grant # 5059901.

Staff Recommendation: Staff recommends approval

Alternatives: Not approve request

Exclude Material from Public Packet? No
Reason: N/A

ROUTING:

Juan Gonzalez	Created/Initiated - 08/15/2025
Jamison Merrick	Approved - 08/15/2025
Maritza Magallan	Approved - 08/15/2025
City Management Office	Final Approval - 08/15/2025

American Sentinel LLC

1500 Mid Cities Dr
TX 78577-2128

Estimate

Date	Estimate #
	AM2507-24

Name / Address
PHARR PD

Ship To

P.O. No.	Rep	Project

Item	Description	Qty	Rate	Total
TDMTT	SELF SUFFICIENT SURVEILLANCE MOBILE TRAILER WITH HYDRAULIC WINCH 20FT MAST & SMART SOLAR CHARGE CONTROLLER ******* THE SOLAR TRAILER AND CAMERAS WILL OPERATE 24/7 TO HELP MONITOR HIGH CRIME AREAS AND PROVIDE ANALYTICS	2	36,331.00	72,662.00T
TDIPHSP	IP SPEAKER	1	0.00	0.00T
INDUSTRIAL S...	INDUSTRIAL RATED SWITCH	1	0.00	0.00T
MULTI	4 MAINTENANCE SERVICE VISITS (EVERY 6 MONTHS AFTER PURCHASE) LIGHT SWITCH OPERATOR ANTI-TOWING KIT SPOT LIGHTS WITH SENSORS CUSTOM TRAILER WRAP	1	0.00	0.00T
MISC CHARGE	INSTALLATION OF PREFERRED SURVEILLANCE EQUIPMENT		0.00	0.00T

QUOTES ARE VALID FOR 30 DAYS

Subtotal	$72,662.00
Sales Tax (0.0%)	$0.00
Total	$72,662.00

SOLE SOURCE AFFIDAVIT

BEFORE ME, the undersigned authority, on this day personally appeared the undersigned, who, being by me duly sworn on his oath stated:

1. I, JORGE DIAZ, am the CEO of AMERICAN SENTINEL LLC, am over the age of 18, and am fully competent to make this affidavit. I have personal knowledge of the facts stated herein, and they are all true and correct.
2. AMERICAN SENTINEL LLC is the sole source provider for the following described product or service:

   The TDMTT, a specialized self-sustainable surveillance solution assembled by American Sentinel LLC. We offer flexibility, adapting the trailer's setup to integrate customer-chosen surveillance and/or network device. We offer a reasonable quick turnaround time and a one-stop-shop service shop, handling all aspects from assembly to customization, with the intent of ensuring that no other company can replicate this tailored approach.

3. No other vendor or company provides this same product with the service of specific features and/or compatibility required for the project.
4. This affidavit is executed for the purpose of requesting an exemption from the competitive bidding requirements of the Texas Local Government Code, Chapter 252, as a procurement of a service or item that is available from only one source, which we meet such requirements because or product and service is tailored to you and no other company can give the subjective service we render.
5. While other providers may exist, our solution is uniquely designed to deliver the most personalized and project-specific service tailored to your needs.

FURTHER AFFIANT SAYETH NOT.

Signature of Authorized Official: X
Printed Name: JORGE DIAZ-GONZALEZ
Title: CEO
Company: AMERICAN SENTINEL

SUBSCRIBED AND SWORN before me this 11th day of July, **2025.**

Notary Public in and for the State of Texas

X

Signature of Applicant

Signature of Notary Public

Print Name: JORGE DIAZ-GONZALEZ

IRIS I. CASIANO
Notary Public
State of Texas
ID # 130313793
My Comm. Expires 08-17-2027

SOLE SOURCE AFFIDAVIT

1. My name is (Print Name) Jorge Diaz
   I am over the age of 18, have never been convicted of a felony and am competent to make this affidavit.
   I am authorized to sign contracts for the following company or firm:

   Company: American Sentinel LLC.
   Address: 1500 Mid Cities Dr.
   City, State, Zip Code Pharr, Texas, 78577
   Telephone Number: ( ) (956) 502-0046
   Fax Number: ( ) _____
   E-mail Address: jdiaz@amsentinel.com

2. The above named company or firm is the sole source of the following item(s) and no other company or firm in the United States of America sells or distributes the products listed below:
   The TDMTT, a specialized self-sustainable surveillance solution assembled by American Sentinel LLC. We offer unmatched flexibility, adapting the trailer's setup to integrate any customer-chosen surveillance and/or network device. Our quick turnaround time and one-stop-shop service, handling all aspects from assembly to customization, ensure no other company can replicate this tailored approach.

3. Competition in providing the above named item(s) is precluded due to:
   _____ A patent
   _____ A copyright
   _____ A secret process
   _____ A monopoly
   _____ It is a film
   _____ It is a manuscript
   _____ It is a book
   _____ It is a utility service, including electricity, gas, or water
   X It is a captive replacement part or component for equipment

4. There is/are no other like item(s) or product(s) available for purchase that would serve the same purpose or function and there is only one price for the above named item(s) or product(s) because of exclusive distribution or marketing rights.

	C.E.O.	7/11/2025
Signature of Authorized Official	Title of Authorized Official	Date

NOTARY USE ONLY
Subscribed and Sworn to before me this _____day of
_____, _____. State of
_____, County of _____.

_____
Signature of Applicant

_____
Signature of Notary Public

AGENDA MEMORANDUM

BOARD: BOARD OF COMMISSIONERS

AGENDA ITEM #: 9.A.
DATE SUBMITTED: August 14, 2025
MEETING DATE: August 18, 2025

FROM: Maria Rangel, City Engineer

DEPARTMENT: Engineering

DIRECTOR: Pilar Rodriguez

Agenda Item: Consideration and action, if any, on Change Order Number 1 in the amount of $22,835.40 and the addition of 30 working days to the construction contract with D. Wilson Construction Company for the Donation Acceptance Program for Fiscal Year 2016. **This item supports IF - Infrastructure.**

Classification: Regular
(* If closed session, City Attorney must review and approve.)

Issue: Change Order #1 is for the following thirteen (13) Potential Change Orders that were previously vetted and approved by staff:

01. Proposed Change Order #01: ($0.00) - Estimated Quantities Discrepancies *
02. Proposed Change Order #02: ($0.00) - Item 7017 - 6002 Correction *
03. Proposed Change Order #03: ($6,380.97) - Jackbore 14" Steel Casing *
04. Proposed Change Order #05: ($62,346.80) - Existing Electrical to TxDOT Canopy *
05. Proposed Change Order #06: (-$18,512.00) - DOAS Basis of Design *
06. Proposed Change Order #10: (-$25,600.00) - Value Engineering Credit: PVC vs. Cast Iron Below Slab *
07. Proposed Change Order #11: (-$88,508.00) – Omit Chain Link Fencing in Its Entirety *
08. Proposed Change Order #12: ($92,503.84) – RFI #34: Electrical Primary Service Revision *
09. Proposed Change Order #13: (-$14,383.00) – Construction Exit Savings *
10. Proposed Change Order #14: (-$11,811.24) – ASI 01: Credit for Gas Line Revisions *
11. Proposed Change Order #16: (-$3,860.00) – Omit Building Plaque *
12. Proposed Change Order #17: ($24,278.03) -- RFI 75 - Commercial Dock 102 Slope **
13. Proposed Change Order #21: ($0.00) - Delay Days - 30 Working Days

Notes:
** Amount to be added to CSJ 0921-02-433*
*** Amount to be added to CSJ 0921-02-424*

Approval of CO #1 is contingent on approval from TxDOT.
(CSJ: 0921-02-424, 425, and 433)
(Project No. 2324-71-510-C08-406)

Fiscal Consideration:
Original Contract: $45,253,972.12
Change Order #1: $22,835.40
Revised Contract: $45,276,807.52

Staff Recommendation: Staff recommends approval of Change Order #1 in the amount of $22,835.40 and 30 additional workweek days.

Alternatives: No alternatives. The PCOs that compose this CO were thoroughly vetted before being approved at the staff level. In most cases, work associated with this CO has already been completed.

Exclude Material from Public Packet? No
Reason: N/A

ROUTING:

Maria Rangel	Created/Initiated - 08/14/2025
Pilar Rodriguez	Approved - 08/15/2025
Maritza Magallan	Approved - 08/15/2025
Jamison Merrick	Approved - 08/15/2025
Ricardo Rodriguez	Approved - 08/15/2025
City Management Office	Final Approval - 08/15/2025

BROWNSTONE CONSULTANTS

August 07, 2025

David M. Chacon, PE, CCM, CFM.
Director of CEI
Brownstone Consultants LLC
PO Box 3898
McAllen, TX 78505

María Rangel, PE
Capital Project Engineer
City of Pharr
118 S. Cage Blvd
Pharr, TX 78577

Re: Pharr FY16 DAP Dock Expansion PH I & II and Agricultural Lab - Change Order No. 01 Recommendation Letter

Ms. Rangel,

Brownstone Consultants has reviewed and analyzed the following proposed change orders (PCO's) submitted by D. Wilson Construction (Contractor):

- **Proposed Change Order #01 (0.00) – Estimated Quantities** – There were some discrepancies between the bid items and sheet C-007 Estimated Quantities. The correct item quantity is shown in the construction documents on sheet C-007. No changes will be made to the contract amount. Below is the list of the bid items with correct quantities based on Sheet C-007:
    - 7017 6200 – Yard Clean Outs: Plans indicate a quantity of 8, while the contract indicates a quantity of 1.
    - 7017 6201 – Sand/Oil Separator: Plans indicate a quantity of 1, while the contract indicates a quantity of 0.
    - 109 6004 – Gas Meter & Regular Assembly: Plans indicate a quantity of 0, while the contract indicates a quantity of 1.

- **Proposed Change Order #02 (0.00) – Item 7017 – 6002 Correction** – There was a discrepancy between the bid item description and the item description shown in sheet C-402. The item description shown in the contract item description is "Sanitary Sewer (3") (PVC)(C900), while the construction documents in sheet C-402 show the item description as "Sanitary Sewer (6") (PVC)(C900)". Based on the RFI #4 response from the EOR, the correct item description is the one shown in sheet C-402. No changes will be made to the contract amount.

- **Proposed Change Order #03 (6,380.97)** – **Jack bore 14" Steel Casing** – The construction documents indicate to bore under the existing concrete roadway for the installation of the 6" water line. GSA and TxDOT did not approve the installation of the water by the open trench method. The contract bid items did not include an item for the boring operations to install the water line. After several iterations of the proposed change order, the final amount was reduced from $23,937.00 to $6,380.97, resulting in $17,556.03 potential savings for the City of Pharr.

- **Proposed Change Order #05 ($62,346.80) – Existing Electrical to TxDOT Canopy** – During the GPR (Ground Penetration Report) survey at the beginning of the construction, an existing electrical line running from the new Primary Exit Canopy (TxDOT) to the Import Lot building was discovered. The electrical line was not shown in the construction documents. Following the response from the EOR in RFI #26, the existing electrical line should be rerouted since the line is currently

underneath the three building foundations. The proposed re-route was approved by the EOR. After several iterations and revisions, the final amount for this proposed change order was reduced from $69,610.20 to $62,346.80, resulting in $7,263.40 in potential saving for the City of Pharr.

- **Proposed Change Order #06 (-$18,512.00) – DOAS Basis of Design** – During the submittal review process for the Roof Top Units (RTUs), the EOR rejected two of the proposed DAIKIN units for not being Buy America Compliant. The contractor proposed a new manufacturer for the two non-compliant units that meet the performance requirements. The proposed RTUs were approved by the EOR via submittal process. The newly approved RTUs resulted in credit for the City of Pharr. The original proposed change order amount was reduced from $116,484.18 to -$18,512.00, resulting in potential savings of $134,996.18 to the City of Pharr.

- **Proposed Change Order #10 (-$25,600.00) – Value Engineering Credit: PVC vs. Cast Iron Below Slab –** The contractor proposed a value-engineered substitution to replace the originally specified cast iron sanitary sewer piping below the building slab with PVC DWV Schedule 40 piping. This change applies only to piping located beneath the slab and does not impact the performance or code compliance of the system. The proposed substitution was reviewed and approved by the Engineer of Record (EOR) and GSA. The change results in a credit of $25,600.00 to the Owner.

- **Proposed Change Order #11 (-$88,508.00) – Omit Chain Link Fencing in Its Entirety –** After further review of the project documents, the chain link fence was not found within the plans, but it was included in the bid documents. As noted by the EOR, the chain link was removed from the drawings during the design phase; however, the corresponding bid item remained in the bid documents. As a result, the contractor provided credit for the installation of the chain link fence and gates, resulting in savings for the City of Pharr of $88,508.00.

- **Proposed Change Order #12 ($92,503.84) – RFI #34: Electrical Primary Service –** Sheet E-601 indicated that the proposed Utility Transformer (UT-3) would be served from the existing Utility Transformer (UT-2). However, MVEC determined that the existing utility line serving UT-2 does not have sufficient capacity to accommodate the additional load from the new buildings. As a result, Magic Valley proposed serving the project with two (2) new transformers and a new utility vault. In response to RFI #34 and subsequent coordination with MVEC, the contractor will install one (1) 4" conduit for primary service and an 8" PVC casing at bore locations, per RFI #15. The total cost associated with this scope of work is $92,503.84.

- **Proposed Change Order #13 (-$14,383.00) – Construction Exit Savings –** The contractor proposed a new type of construction entrance in leu of the standard construction entrance. The substitution was approved by the EOR and GSA. The contractor offered credit for unused funds under Item 506-6020 – Construction Exit. The original budget for this item was $49,595.00. The total cost for the substitution and relocation of the entrance was $35,212.00, resulting in a credit of $14,383.00 to the Owner.

- **Proposed Change Order #14 (-$11,811.24) – ASI 01: Credit for Gas Line Revisions –** As part of ASI 01 and Sheet C-007, the revised quantities for the removal of the existing gas line were reduced from 1,222 LF to 602 LF, resulting in a credit to the City of Pharr of $11,811.24.

- **Proposed Change Order #16 (-$3,860.00) – Omit Building Plaque –** After further review of the proposed building plaque shown in the specifications, the City of Pharr will not be pursuing a plaque for this project. Instead, the City of Pharr will be going with a different sort of dedication monument as part of a different project. A credit of $3,860.00 will be issued to the City of Pharr for the removal of this scope from the contract.

- **Proposed Change Order #17 ($24,278.03) - RFI 75 - Commercial Dock 102 Slope -** Design drawings (Sheets A-112, A-113, and A-114) included a general note to "Slope Floor to Drain" at Room 102 but did not specify slope details. RFI #75 requested clarification. In response, the design team confirmed that a 1/16" per foot slope is required over approximately 40 feet toward the eastern dock edge, resulting in a 2-1/2" drop. To maintain the minimum 48" dock height, adjacent pavement will also be lowered. An ASI will be issued to update Civil, Architectural, and Structural drawings. Total cost: $24,278.03.

- **Proposed Change Order #21 ($0.00) - Delay Days** - A total of 30 working days (equivalent to 45 calendar days) have been granted to D. Wilson Construction due to delays associated with Change Proposals 05, 12, and 17. Change Proposal 17, an Owner-directed revision to the dry dock retaining wall concrete scope, resulted in 11 delay days. Change Proposal 05 (Revised), for electrical service to the TxDOT canopy, and Change Proposal 12 Rev 3, covering MVEC primary power and transformer work, had original impacts of 19 and 24 days, respectively. Although the combined original delay totaled 57 calendar days, a negotiated final amount of 45 calendar days was agreed upon, resulting in this 30-working-day extension.

Brownstone Consultants recommends approving the above-referenced Proposed Change Orders (PCOs) as part of Change Order No. 1, in the amount of $22,835.40 and with an extension of thirty (30) additional working days. Please feel free to contact us with any questions or concerns.

Sincerely,

David M. Chacon, PE, CCM, CFM

Attachments:

- City of Pharr Change Order Form
- TxDOT Form 2146-L
- D. Wilson Construction – PCO Nos. 01, 02, 03, 05, 06, 10, 11, 12, 13 14, 16, 17 and 21.

CC:

Cynthia Garza – City of Pharr Assistant City Manager
Pilar Rodriguez – City of Pharr Interim City Engineer
Benjamin Luna, PE – Halff Transportation Engineer
Carlos Del Angel, PMP, CCM – Brownstone Project Executive

CHANGE ORDER

Contractor: D Wilson Construction | Change Order No.: 1

Project: Pharr FY16 DAP-Dock Expansion PH I & II and Agricultural Lab | Date: 7/30/2025

CSJ: 0921-02-424, 0921-02-425, 0921-02-433

Notice to Proceed Date: 23-Oct-24 | Change Order Amount: $22,835.40

You are directed to make the following changes in the Contract Documents:

01. Proposed Change Order #01: ($0.00) - Estimated Quantities Discrepancies *
02. Proposed Change Order #02: ($0.00) - Item 7017 - 6002 Correction *
03. Proposed Change Order #03: ($6,380.97) - Jackbore 14" Steel Casing *
04. Proposed Change Order #05: ($62,346.80) - Existing Electrical to TxDOT Canopy *
05. Proposed Change Order #06: (-$18,512.00) - DOAS Basis of Design *
06. Proposed Change Order #10: (-$25,600.00) - Value Engineering Credit: PVC vs. Cast Iron Below Slab *
07. Proposed Change Order #11: (-$88,508.00) – Omit Chain Link Fencing in Its Entirety *
08. Proposed Change Order #12: ($92,503.84) – RFI #34: Electrical Primary Service Revision *
09. Proposed Change Order #13: (-$14,383.00) – Construction Exit Savings *
10. Proposed Change Order #14: (-$11,811.24) – ASI 01: Credit for Gas Line Revisions *
11. Proposed Change Order #16: (-$3,860.00) – Omit Building Plaque *
12. Proposed Chande Order #17: ($24,278.03) -- RFI 75 - Commercial Dock 102 Slope **
13. Proposed Change Order #21: ($0.00) - Delay Days - 30 Working Days

Reason for Change Order:

01. Proposed Change Order #01 - Design Error ($0.00) Estimated Quantities - There was some discrepancies between the bid items and Sheet C-007 Estimated Quantities. The correct item quantity is shown in the construction documents on sheet C-007. The correct item quantity is shown in the construction documents on sheet C-007. No changes will be made to the contract amount.

02. Proposed Change Order # 02 - Design Error ($0.00) Item 7017 - 6002 Correction - There was a discrepancy between the bid item description and the item description shown in sheet C-402. The item description shown in the contract item description is “Sanitary Sewer (3”) (PVC)(C900), while the construction documents in sheet C-402 show the item description as “Sanitary Sewer (6”) (PVC)(C900)”. Based on the RFI #4 response from the EOR, the correct item description is the one shown in sheet C-402**.**

03. Proposed Change Order #03 (6,380.97) – **Jack bore 14” Steel Casing** – The construction documents indicate to bore under the existing concrete roadway for the installation of the 6” water line. GSA and TxDOT did not approve the installation of the water by the open trench method. The contract bid items did not include an item for the boring operations to install the water line.

04. Proposed Change Order #05 ($62,346.80) – Existing Electrical to TxDOT Canopy - An existing electrical line running from the new Primary Exit Canopy (TxDOT) to the Import Lot building was discovered. The electrical line was not shown in the construction documents. Following the response from the EOR in RFI #26, the existing electrical line should be rerouted since the line is currently underneath the three building foundations. .

05. Proposed Change Order #06 (-$18,512.00) – DOAS Basis of Design - During the submittal review process for the Roof Top Units (RTUs), the EOR rejected two of the proposed DAIKIN units for not being Buy America Compliant. The contractor proposed a new manufacturer for the two non-compliant units that meet the performance requirements. The proposed RTUs were approved by the EOR via submittal process

06. Proposed Change Order #10 - (-$25,600.00) - Value Engineering Credit: PVC vs. Cast Iron Below Slab - The contractor proposed a value-engineered substitution to replace the originally specified cast iron sanitary sewer piping below the building slab with PVC DWV Schedule 40 piping. This change applies only to piping located beneath the slab and does not impact the performance or code compliance of the system.

07. Proposed Change Order #11 (-$88,508.00) – Omit Chain Link Fencing in Its Entirety – After further review of the project documents, the chain link fence was not found within the plans, but it was included in the bid documents. As noted by the EOR, the chain link was removed from the drawings during the design phase; however, the corresponding bid item remained in the bid documents**.**

08. Proposed Change Order #12 ($92,503.84) – RFI #34: Electrical Primary Service Revision – Sheet E-601 indicated that the proposed Utility Transformer (UT-3) would be served from the existing Utility Transformer (UT-2). However, MVEC determined that the existing utility line serving UT-2 does not have sufficient capacity to accommodate the additional load from the new buildings. As a result, Magic Valley proposed serving the project with two (2) new transformers and a new utility vault.

09. Proposed Change Order #13 (-$14,383.00) – Construction Exit Savings – The contractor proposed a new type of construction entrance in leu of the standard construction entrance. The substitution was approved by the EOR and GSA. The contractor offered credit for unused funds under Item 506-6020 – Construction Exit.

10. Proposed Change Order #14 (-$11,811.24) – ASI 01: Credit for Gas Line Revisions – As part of ASI 01 and Sheet C-007, the revised quantities for the removal of the existing gas line were reduced from 1,222 LF to 602 LF.

11. Proposed Change Order #16 (-$3,860.00) – Omit Building Plaque - After further review of the proposed building plaque shown in the specifications, the City of Pharr will not be pursuing a plaque for this project. Instead, the City of Pharr will be going with a different sort of dedication monument as part of a different project.

12. Proposed Change Order #17 ($24,278.03) - RFI 75 - Commercial Dock 102 Slope - Design drawings (Sheets A-112, A-113, and A-114) included a general note to "Slope Floor to Drain" at Room 102 but did not specify slope details. RFI #75 requested clarification. In response, the design team confirmed that a 1/16" per foot slope is required over approximately 40 feet toward the eastern dock edge, resulting in a 2-1/2" drop. To maintain the minimum 48" dock height, adjacent pavement will also be lowered.

13. Proposed Change Order #21 ($0.00) - Delay Days - A total of 30 working days (equivalent to 45 calendar days) have been granted to D. Wilson Construction due to delays associated with Change Proposals 05, 12, and 17. Change Proposal 17, an Owner-directed revision to the dry dock retaining wall concrete scope, resulted in 11 delay days. Change Proposal 05 (Revised), for electrical service to the TxDOT canopy, and Change Proposal 12 Rev 3, covering MVEC primary power and transformer work, had original impacts of 19 and 24 days, respectively. Although the combined original delay totaled 57 calendar days, a negotiated final amount of 45 calendar days was agreed upon, resulting in this 30-working-day extension.

Notes:

** Amount to be added to CSJ 0921-02-433*

*** Amount to be added to CSJ 0921-02-424*

Original Contract:	$	45,253,972.12	Original Completion Date:	16-Jul-26
Previous Change Order: (+/-)	$	-	Additional Days:	30
This Change Order: (+/-)	$	22,835.40	Revised Completion Date:	27-Aug-26
Revised Contract Amount:	$	45,276,807.52		

It is agreed by the Contractor that this Change Order includes any and all costs associated with or resulting from change(s) ordered herein, including all impact, delays, and acceleration costs. Other than the dollar amount and time allowance listed above, there shall be no further time or dollar compensation as a result of this Change Order.

THIS DOCUMENT SHALL BECOME AN AMMENDMENT TO THE CONTRACT AND ALL STIPULATIONS AND COVENANTS OF THE CONTRACT SHALL APPLY HERETO.

Accepted:

Contractor	Authorized Signature	Date

Recommended:

David M. Chacon, PE, CCM, CFM Project Engineer/Architect/Manager	Authorized Signature	Date
Pilar Rodriguez, P.E Interim City Engineer	Authorized Signature	Date

Approved:

Dr. Jonathan Flores City Manager	Authorized Signature	Date

Form 2146-L
(Rev. 10/11)
Page 1 of 1

CONSTRUCTION CONTRACT CHANGE ORDER NUMBER: 01

1. CONTRACTOR: D. WILSON CONSTRUCTION

2. Change Order Work Limits: Sta. _____ to Sta. _____

3. Type of Change (on federal-aid non-exempt projects): NA (Major/Minor)

4. Describe the change and the reason for the change order. When necessary, include exceptions to this agreement.

See attachment below

CCSJ:	0921-02-433
Project:	F2024(823)
Highway:	Pharr Int. Bridge
County:	Hidalgo
District:	Pharr -21
Contract Number:	

5. New or revised plan sheet(s) are attached and numbered: _____

Each signatory hereby warrants that each has the authority to execute this Change Order.

By signing this change order, the contractor agrees to waive any and all claims for additional compensation due to any and all other expenses; additional changes for time, overhead and profit; or loss of compensation as a result of this change. Further, the contractor agrees that this agreementis made in accordance with Item 4 and the Contract. Exceptions should be noted in the response for #5 above.

THE CONTRACTOR Date _____

By _____

Typed/Printed Name _____

Typed/Printed Title _____

The following information must be provided

Time Ext. #: _____ Days added on this C.O.: _____

Amt. added by this change order: -$1,442.63

For TxDOT use only:

Days participating: _____

Amount participating: _____

Signature Date

Name/Title

RECOMMENDED FOR EXECUTION:

Name/Title Date

Name/Title Date
☐ APPROVED ☐ REQUEST APPROVAL

Name/Title Date

Name/Title Date
☐ APPROVED ☐ REQUEST APPROVAL

Name/Title Date

Name/Title Date
☐ APPROVED ☐ REQUEST APPROVAL

Name/Title Date

Name/Title Date
☐ APPROVED

Engineer's Seal:

CONSTRUCTION CONTRACT CHANGE ORDER NUMBER: 01

Estimated Cost:

CCSJ: 0921-02-433

Paid by Invoice? (◯ Yes ◯ No)

TABLE A: Force Account Work and Materials Placed into Stock

LABOR	HOURLY RATE	EQUIPMENT	HOURLY RATE

TABLE B: Contract Items

				ORIGINAL + PREVIOUSLY REVISED		NEW		
ITEM	DESCRIPTION	UNIT	UNIT PRICE	QUANTITY	ITEM COST	QUANTITY	ITEM COST	OVERRUN/ UNDERRUN
PCO 01	ESTIMATED QUANTITIES	LS	0.00	0.00	0.00	1.00	0.00	0.00
PCO 02	ITEM 7017 - 6002 CORRECTION	LS	0.00	0.00	0.00	1.00	0.00	0.00
PCO 03	JACK BORE 14" STEEL CASING	LS	6,380.97	0.00	0.00	1.00	6,380.97	6,380.97
PCO 05	EXISTING ELECTRICAL TO TXDOT C	LS	62,346.80	0.00	0.00	1.00	62,346.80	62,346.80
PCO 06	DOAS BASIS OF DESIGN	LS	- 18,512.00	0.00	0.00	1.00	- 18,512.00	- 18,512.00
PCO 10	VALUE ENGINEERING CREDIT PVC V	LS	- 25,600.00	0.00	0.00	1.00	- 25,600.00	- 25,600.00
PCO 11	OMIT CHAIN LINK FENCING IN ITS E	LS	- 88,508.00	0.00	0.00	1.00	- 88,508.00	- 88,508.00
PCO 12	RFI 34 ELECTRICAL PRIMARY SERVIC	LS	92,503.84	0.00	0.00	1.00	92,503.84	92,503.84
PCO 13	CONSTRUCTION EXIT SAVINGS	LS	- 14,383.00	0.00	0.00	1.00	- 14,383.00	- 14,383.00
PCO 14	CREDIT FOR GAS LINE REVISIONS	LS	- 11,811.24	0.00	0.00	1.00	- 11,811.24	- 11,811.24
PCO 16	OMIT BUILDING PLAQUE	LS	- 3,860.00		0.00	1.00	- 3,860.00	- 3,860.00
					0.00		0.00	0.00
					0.00		0.00	0.00
					0.00		0.00	0.00
					0.00		0.00	0.00
					0.00		0.00	0.00
					0.00		0.00	0.00
					0.00		0.00	0.00
					0.00		0.00	0.00
					0.00		0.00	0.00
					0.00		0.00	0.00
					0.00		0.00	0.00
TOTALS					0.00		- 1,442.63	- 1,442.63

CONSTRUCTION CONTRACT CHANGE ORDER NUMBER: _____

TABLE B: Contract Items (Continued)

CCSJ: _____

				ORIGINAL + PREVIOUSLY REVISED		NEW		
ITEM	DESCRIPTION	UNIT	UNIT PRICE	QUANTITY	ITEM COST	QUANTITY	ITEM COST	OVERRUN/ UNDERRUN
					0.00		0.00	0.00
					0.00		0.00	0.00
					0.00		0.00	0.00
					0.00		0.00	0.00
					0.00		0.00	0.00
					0.00		0.00	0.00
					0.00		0.00	0.00
					0.00		0.00	0.00
					0.00		0.00	0.00
					0.00		0.00	0.00
					0.00		0.00	0.00
					0.00		0.00	0.00
					0.00		0.00	0.00
					0.00		0.00	0.00
					0.00		0.00	0.00
					0.00		0.00	0.00
					0.00		0.00	0.00
					0.00		0.00	0.00
					0.00		0.00	0.00
					0.00		0.00	0.00
					0.00		0.00	0.00
					0.00		0.00	0.00
					0.00		0.00	0.00
					0.00		0.00	0.00
					0.00		0.00	0.00
					0.00		0.00	0.00
					0.00		0.00	0.00
					0.00		0.00	0.00
					0.00		0.00	0.00
The "Totals" from Table B of the previous work sheet:					0.00		- 1,442.63	- 1,442.63
TOTALS					0.00		- 1,442.63	- 1,442.63

Contact/Help

Form 2146-L
(Rev. 10/11)
Page 1 of 1

CONSTRUCTION CONTRACT CHANGE ORDER NUMBER: 01

1. CONTRACTOR: D. Wilson Construction

2. Change Order Work Limits: Sta. _____ to Sta. _____

3. Type of Change (on federal-aid non-exempt projects): NA (Major/Minor)

4. Describe the change and the reason for the change order. When necessary, include exceptions to this agreement.

See attachment below

CCSJ:	0921-02-424
Project:	F2024(824)
Highway:	Pharr Int. Bridge
County:	Hidalgo
District:	Pharr -21
Contract Number:	

5. New or revised plan sheet(s) are attached and numbered: _____

Each signatory hereby warrants that each has the authority to execute this Change Order.

By signing this change order, the contractor agrees to waive any and all claims for additional compensation due to any and all other expenses; additional changes for time, overhead and profit; or loss of compensation as a result of this change. Further, the contractor agrees that this agreementis made in accordance with Item 4 and the Contract. Exceptions should be noted in the response for #5 above.

THE CONTRACTOR Date _____

By _____

Typed/Printed Name _____

Typed/Printed Title _____

The following information must be provided

Time Ext. #: _____ Days added on this C.O.: _____

Amt. added by this change order: $24,278.03

For TxDOT use only:

Days participating: _____

Amount participating: _____

Signature Date

Name/Title

RECOMMENDED FOR EXECUTION:

Name/Title Date

Name/Title Date
☐ APPROVED ☐ REQUEST APPROVAL

Name/Title Date

Name/Title Date
☐ APPROVED ☐ REQUEST APPROVAL

Name/Title Date

Name/Title Date
☐ APPROVED ☐ REQUEST APPROVAL

Name/Title Date

Name/Title Date
☐ APPROVED

Engineer's Seal:

CONSTRUCTION CONTRACT CHANGE ORDER NUMBER: 01

Estimated Cost:

CCSJ: 0921-02-424

Paid by Invoice? (◯ Yes ◯ No)

TABLE A: Force Account Work and Materials Placed into Stock

LABOR	HOURLY RATE	EQUIPMENT	HOURLY RATE

TABLE B: Contract Items

				ORIGINAL + PREVIOUSLY REVISED		NEW		
ITEM	DESCRIPTION	UNIT	UNIT PRICE	QUANTITY	ITEM COST	QUANTITY	ITEM COST	OVERRUN/ UNDERRUN
PCO 017	EXISTING ELECTRICAL TO TXDOT C	LS	24,278.03	0.00	0.00	1.00	24,278.03	24,278.03
					0.00		0.00	0.00
					0.00		0.00	0.00
					0.00		0.00	0.00
					0.00		0.00	0.00
					0.00		0.00	0.00
					0.00		0.00	0.00
					0.00		0.00	0.00
					0.00		0.00	0.00
					0.00		0.00	0.00
					0.00		0.00	0.00
					0.00		0.00	0.00
					0.00		0.00	0.00
					0.00		0.00	0.00
					0.00		0.00	0.00
					0.00		0.00	0.00
					0.00		0.00	0.00
					0.00		0.00	0.00
					0.00		0.00	0.00
					0.00		0.00	0.00
					0.00		0.00	0.00
TOTALS					0.00		24,278.03	24,278.03

CONSTRUCTION CONTRACT CHANGE ORDER NUMBER: _____

TABLE B: Contract Items (Continued)

CCSJ: _____

				ORIGINAL + PREVIOUSLY REVISED		NEW		
ITEM	DESCRIPTION	UNIT	UNIT PRICE	QUANTITY	ITEM COST	QUANTITY	ITEM COST	OVERRUN/ UNDERRUN
					0.00		0.00	0.00
					0.00		0.00	0.00
					0.00		0.00	0.00
					0.00		0.00	0.00
					0.00		0.00	0.00
					0.00		0.00	0.00
					0.00		0.00	0.00
					0.00		0.00	0.00
					0.00		0.00	0.00
					0.00		0.00	0.00
					0.00		0.00	0.00
					0.00		0.00	0.00
					0.00		0.00	0.00
					0.00		0.00	0.00
					0.00		0.00	0.00
					0.00		0.00	0.00
					0.00		0.00	0.00
					0.00		0.00	0.00
					0.00		0.00	0.00
					0.00		0.00	0.00
					0.00		0.00	0.00
					0.00		0.00	0.00
					0.00		0.00	0.00
					0.00		0.00	0.00
					0.00		0.00	0.00
					0.00		0.00	0.00
					0.00		0.00	0.00
					0.00		0.00	0.00
The "Totals" from Table B of the previous work sheet:					0.00		24,278.03	24,278.03
TOTALS					0.00		24,278.03	24,278.03

Contact/Help

PCO #001

D. Wilson Construction
PO Box 3455
McAllen, Texas 78502
Phone: (956) 686-9573
Fax: (956) 686-3270

Project: 24-235 - Pharr FY16 DAP - Agricultural Lab, Dock Expansion I & II
9901 S Cage Blvd
Pharr, Texas 78577

Prime Contract Potential Change Order #001: RFI 01 - Estimated Quantities

TO:	City Of Pharr PO Box 1729 Pharr, Texas 78577	**FROM:**	D Wilson Construction Company PO Box 3455 McAllen, Texas 78502
PCO NUMBER/REVISION:	001 / 0	**CONTRACT:**	24-235 - City of Pharr Dock Expansion
REQUEST RECEIVED FROM:	William Northcutt **(D Wilson Construction Company)**	**CREATED BY:**	William Northcutt **(D Wilson Construction Company)**
STATUS:	Pending - In Review	**CREATED DATE:**	11/25/2024
REFERENCE:	RFI #01	**PRIME CONTRACT CHANGE ORDER:**	None
EXECUTED:	No	**SIGNED CHANGE ORDER RECEIVED DATE:**	
SCHEDULE IMPACT:	0 days	**TOTAL AMOUNT:**	$0.00

POTENTIAL CHANGE ORDER TITLE: RFI 01 - Estimated Quantities

CHANGE REASON: Existing Condition

POTENTIAL CHANGE ORDER DESCRIPTION: *(The Contract Is Changed As Follows)*
CE #001 - Estimated Quantities on Drawings vs. Contract
Contract change for RFI #1

We noted the following discrepancies between Sheet C-007 Estimate Quantity and D. Wilson's Contract. Both attached for reference.

Item 88 REF 7017 6200 – YARD CLEAN OUTS. Plans indicates quantity 8. Contract indicates quantity 1.
Item 89 REF 7017 6201 - SAND/OIL SEPARATOR. Plans indicates quantity 1. Contract indicates quantity 0.
Item 109 REF 6004 – GAS METER & REGULAR ASSEMBLY. Plans indicates quantity 0. Contract indicates quantity 1.

Install : Based off Plans Quantity

ATTACHMENTS:
RFI #01 - Estimated Quantities on Drawings vs. Contract- Response.pdf

#	Budget Code	Description	Amount
1	001.15-100.S	7017 - 6200 : Yard Clean Outs : 8 Total	$0.00
2	001.15-100.S	7017 - 6201: Sand/Oil Seperator : 1 Total	$0.00
3	001.15-100.S	109 - 6004 : Gas Meter & Regular Assembly = 0 Total	$0.00
		Grand Total:	**$0.00**

Brownstone Consultants, LLC
P.O. Box 3898
McAllen, Texas 78505

04/01/2025
SIGNATURE **DATE**

City Of Pharr
PO Box 1729
Pharr, Texas 78577

Maria Luisa Rangel
SIGNATURE 05/05/2025 **DATE**

D Wilson Construction Company
PO Box 3455
McAllen, Texas 78502

SIGNATURE **DATE**

PCO #002

D. Wilson Construction
PO Box 3455
McAllen, Texas 78502
Phone: (956) 686-9573
Fax: (956) 686-3270

Project: 24-235 - Pharr FY16 DAP - Agricultural Lab, Dock Expansion I & II
9901 S Cage Blvd
Pharr, Texas 78577

Prime Contract Potential Change Order #002: RFI #4: Item 7017-6002 Correction

TO:	City Of Pharr PO Box 1729 Pharr, Texas 78577	**FROM:**	D Wilson Construction Company PO Box 3455 McAllen, Texas 78502
PCO NUMBER/REVISION:	002 / 0	**CONTRACT:**	24-235 - City of Pharr Dock Expansion
REQUEST RECEIVED FROM:		**CREATED BY:**	William Northcutt **(D Wilson Construction Company)**
STATUS:	Pending - In Review	**CREATED DATE:**	12/10/2024
REFERENCE:		**PRIME CONTRACT CHANGE ORDER:**	None
EXECUTED:	No	**SIGNED CHANGE ORDER RECEIVED DATE:**	
SCHEDULE IMPACT:	0 days	**TOTAL AMOUNT:**	$0.00

POTENTIAL CHANGE ORDER TITLE: RFI #4: Item 7017-6002 Correction

CHANGE REASON: Existing Condition

POTENTIAL CHANGE ORDER DESCRIPTION: *(The Contract Is Changed As Follows)*
CE #003 - #4: Item 7017-6002 Clarification
RFI 004 - Bid Correction for line item 7017-6002 - Sanitary Sewer (3") (PVC)(C900) should read and be 7017-6002 - Sanitary Sewer (6") (PVC)(C900).

ATTACHMENTS:

#	Budget Code	Description	Amount
1	001.02-100.S	Bid Correction - Remove 3" PVC C900 - 23 LF	$(5,891.45)
2	001.02-100.S	Bid Correction - Add 6" PVC C900 - 23 LF	$5,891.45
		Grand Total:	**$0.00**

Brownstone Consultants, LLC
P.O. Box 3898
McAllen, Texas 78505

SIGNATURE 04/01/2025 **DATE**

City Of Pharr
PO Box 1729
Pharr, Texas 78577

Maria Luisa Rangel
SIGNATURE 05/05/2025 **DATE**

D Wilson Construction Company
PO Box 3455
McAllen, Texas 78502

SIGNATURE **DATE**

PCO #003 Rev 3

D. Wilson Construction
PO Box 3455
McAllen, Texas 78502
Phone: (956) 686-9573

Project: 24-235 - Pharr FY16 DAP-Agricultural Lab, Dock Expansion I & II
9901 S Cage Blvd
Pharr, Texas 78577

Prime Contract Potential Change Order #003 Rev 3: RFI #7: Jackbore 14" Casing

TO:	City Of Pharr PO Box 1729 Pharr, Texas 78577	**FROM:**	D Wilson Construction Company PO Box 3455 McAllen, Texas 78502
PCO NUMBER/REVISION:	003 Rev 3 / 3	**CONTRACT:**	24-235 - City of Pharr Dock Expansion
REQUEST RECEIVED FROM:	Dennis Covert **(IOC Company, LLC)**	**CREATED BY:**	William Northcutt **(D Wilson Construction Company)**
STATUS:	Pending - In Review	**CREATED DATE:**	1/14/2025
REFERENCE:	RFI 7	**PRIME CONTRACT CHANGE ORDER:**	None
EXECUTED:	No	**SIGNED CHANGE ORDER RECEIVED DATE:**	
SCHEDULE IMPACT:		**TOTAL AMOUNT:**	$6,380.97

POTENTIAL CHANGE ORDER TITLE: RFI #7: Jackbore 14" Casing

CHANGE REASON: Design Development

POTENTIAL CHANGE ORDER DESCRIPTION: *(The Contract Is Changed As Follows)*
CE #008 - #7: Item 7112-6003 Pressure Water Pipe C-900 (6in) - Bore
RFI# 007 - Jackbore 6" Watermain at crossings.

Item 476 - Jackbore 14 Steel Casing - $352/LF

Please find cost for performing road bores to install 6in water main at 2 locations. IOC is not in agreement with the response to IOC-RFI 5 about the bores being subsidiary to the water line item. We can find nothing to support the RFI response in the contract documents. We have priced this work based on a 32 foot and 36 foot casing installation as a best estimate, no lengths were provided in the plans, if the length directed to install is different the price may be adjusted.

ATTACHMENTS:

#	Budget Code	Description	Amount
1	001.02-100.S	Site - Jackbore 6" Watermain - 68LF	$19,377.62
2	001.02-100.S	7112-6003 Pressure Water Pipe C-900-18 PVC 6" - credit 56 LF	$(4,883.20)
3	001.02-100.S	400-6007 credit for Cut & Restore Concrete Paving not used. -31.11 SY	$(8,477.48)
		Subtotal:	**$6,016.94**
		Profit (5.00% Applies to All Line Items):	$300.85
		Bond (1.00% Applies to All Line Items):	$63.18
		Grand Total:	**$6,380.97**

Brownstone Consultants, LLC
P.O. Box 3898
McAllen, Texas 78505

SIGNATURE 05/02/2025 **DATE**

City Of Pharr
PO Box 1729
Pharr, Texas 78577

Maria Luisa Rangel
SIGNATURE 05/05/2025 **DATE**

D Wilson Construction Company
PO Box 3455
McAllen, Texas 78502

SIGNATURE **DATE**

CHANGE ORDER WORKSHEET

PROJECT: **24-235 Pharr FY16 DAP Ag Bldg, Cold Storage & Dock Expansion** **4/24/2025**

DESCIPTION: **PCO 03R3 - RFI #007 Jackboring in lieu of C&R**

Please add 5% for overhead & profit and 1% for bond, cumulatively.

						Cost Subcontractor
01-000	GENERAL CONDITIONS					
		W			$	-
				Subtotal	$	-
02-000	SITEWORK					
IOC	Jackbore Aug 6" Water Main	68	LF	$ 284.965	$	19,377.61
7112-003	Pressure Water Pipe C-900 DR18P'	-56	LF	$ 87.200	$	(4,883.20)
400-6007	Cut & Restore Credit	-31.11	SY	$ 272.500	$	(8,477.48)
Gonzalez	Tie Rebar, Compaction & Backfilling				$	-
				Subtotal	$	6,016.94
03-000	CONCRETE					
RGS	Reinforcing Steel for PL					
				Subtotal	$	-
04-000	MASONRY					
					$	-
				Subtotal	$	-
05-000	STRUCTURAL STEEL					
					$	-
				Subtotal	$	-
06-000	CARPENTRY & MILLWORK					
					$	-
				Subtotal	$	-
07-000	MOISTURE PROTECTION					
				Subtotal	$	-
08-000	DOORS & WINDOWS					
					$	-
				Subtotal	$	-
09-000	FINISHES					
				Subtotal	$	-
10-000	SPECIALTIES					

		Subtotal	$ -
15-000	HVAC & PLUMBING		
			$ -
		Subtotal	$ -
16-000	Electrical		
		Subtotal	$ -
		Combined Cost	$ 6,016.94

Comments / Clarifications:

1. Jackboring at Water Line in lieu of Cut and Restore

Cost	$	6,016.94
OH, Insurar	$	300.85
Bond 1%	$	63.18
Subtotal	$	364.02
Change Order Total	$	6,380.96

PROJECT : **24-235 Pharr FY16 DAP Ag Bldg, Cold Storage & Dock Expansion**

PCO 03R3 - RFI #007 Jackboring in lieu of C&R

DESCRIPTION	QUANTITY	UNIT	UNIT COST L	UNIT COST M	UNIT COST E	UNIT COST S	EXTENSION LABOR	EXTENSION MATERIAL	EXTENSION EQUIP	EXTENSION SUB
SUB: IOC							-	-	-	-
Labor							-	-	-	-
Foreman	10	Hr	50				500.00	-	-	-
Operator Excavator	10	Hr	21				210.00	-	-	-
Operator Loader	10	Hr	18				180.00	-	-	-
Laborer	20	Hr	16				320.00	-	-	-
							-	-	-	-
Equipment							-	-	-	-
F-250 Pickup Truck	10	Hr			32.94		-	-	329.40	-
CAT 325 Excavsatgor	10	Hr			111.22		-	-	1,112.20	-
Cata 938 Loader	10	Hr			64.62		-	-	646.20	-
							-	-	-	-
Material							-	-	-	-
14" X 0.374 Steel Casing	68	LF		68.89			-	4,684.52	-	-
Casing Spacers	11	EA		25			-	275.00	-	-
End Seals	4	EA		108			-	432.00	-	-
Mechanical Joints	4	EA		147.71			-	590.84	-	-
Star Grip Restraint	8	EA		85.72			-	685.76	-	-
6" PVC C900 DR 18	55	LF		12.5			-	687.50	-	-
							-	-	-	-
							-	-	-	-
SUBCONRACTOR							-	-	-	-
Electro-HI (Bore 6" Water main) 66 LF	66	LF				50	-	-	-	3,300.00
Electro-HI (Bore pits)	4	EA				250	-	-	-	1,000.00
							-	-	-	-
Labor & Tax							-	-	-	-
Overtime Factor	0						-	-	-	-
Labor Burden (Salary)	55%		500				275.00	-	-	-
Labor Burdern (Hourly)	55%		710				390.50	-	-	-
Tax on Materials	0						-	-	-	-
SUB DIRECT COSTS							**1,875.50**	**7,355.62**	**2,087.80**	**4,300.00**
Compensation							-	-	-	-
Labor	25%						468.88	-	-	-
Material	25%						-	1,838.91	-	-
Equipment	15%						-	-	313.17	-
Subcontractors Subcontractor	5%						-	-	-	215.00
							-	-	-	-
SUBCONTRACTOR'S OH & Profit							**468.88**	**1,838.91**	**313.17**	**215.00**
							-	-	-	-
							-	-	-	-
							-	-	-	-
							-	-	-	-
SUBTOTALS							2,344.38	9,194.53	2,400.97	4,515.00
DWC OH & P	**5%**				TOTAL			**18,455**	**922.74**	**19,377.61**

Sheet No. **1** **Item:** **RFI #007 Jackboring in lieu of C&R** Unit Price ---> 284.96

PCO #003 Rev 2

D. Wilson Construction
PO Box 3455
McAllen, Texas 78502
Phone: (956) 686-9573

Project: 24-235 - Pharr FY16 DAP-Agricultural Lab, Dock Expansion I & II
9901 S Cage Blvd
Pharr, Texas 78577

Prime Contract Potential Change Order #003 Rev 2: RFI #7: Jackbore 14" Casing

TO:	City Of Pharr PO Box 1729 Pharr, Texas 78577	**FROM:**	D Wilson Construction Company PO Box 3455 McAllen, Texas 78502
PCO NUMBER/REVISION:	003 Rev 2 / 2	**CONTRACT:**	24-235 - City of Pharr Dock Expansion
REQUEST RECEIVED FROM:	Dennis Covert **(IOC Company, LLC)**	**CREATED BY:**	William Northcutt **(D Wilson Construction Company)**
STATUS:	Pending - In Review	**CREATED DATE:**	1/14/2025
REFERENCE:		**PRIME CONTRACT CHANGE ORDER:**	None
EXECUTED:	No	**SIGNED CHANGE ORDER RECEIVED DATE:**	
SCHEDULE IMPACT:	0 days	**TOTAL AMOUNT:**	$13,742.01

POTENTIAL CHANGE ORDER TITLE: RFI #7: Jackbore 14" Casing

CHANGE REASON: Design Development

POTENTIAL CHANGE ORDER DESCRIPTION: *(The Contract Is Changed As Follows)*
CE #008 - #7: Item 7112-6003 Pressure Water Pipe C-900 (6in) - Bore
RFI# 007 - Jackbore 6" Watermain at crossings.

Item 476 - Jackbore 14 Steel Casing - $352/LF

Please find cost for performing road bores to install 6in water main at 2 locations. IOC is not in agreement with the response to IOC-RFI 5 about the bores being subsidiary to the water line item. We can find nothing to support the RFI response in the contract documents. We have priced this work based on a 32 foot and 36 foot casing installation as a best estimate, no lengths were provided in the plans, if the length directed to install is different the price may be adjusted.

ATTACHMENTS:
RFI 5-response.pdf

Unit price should be $87.20/LF

#	Budget Code	Description	Amount
1	001.02-100.S	Site - Jackbore 6" Watermain - 68LF	$22,571.20
2	001.02-100.S	7112-6003 Pressure Water Pipe C-900-18 PVC 6" - credit 56 LF @ 80	$(4,480.00)
3	001.02-100.S	400-6007 credit for Cut & Restore Concrete Paving not used. 165 SY @ 31.11	$(5,133.15)
		Subtotal:	**$12,958.05**
		Profit (5.00% Applies to All Line Items):	$647.90
		Bond (1.00% Applies to All Line Items):	$136.06
		Grand Total:	**$13,742.01**

Unit price should be $272.50/SY

1. Please see the comments on IOCs cost breakdown. Comments were also included in previous revision.

Brownsto		**tion Company**
P.O. Box 3898 McAllen, Texas 78505	PO Box 1729 Pharr, Texas 78577	PO Box 3455 McAllen, Texas 78502
SIGNATURE **DATE**	**SIGNATURE** **DATE**	**SIGNATURE** **DATE**

PCO #003 Rev 2

D. Wilson Construction
PO Box 3455
McAllen, Texas 78502
Phone: (956) 686-9573

Project: 24-235 - Pharr FY16 DAP-Agricultural Lab, Dock Expansion I & II
9901 S Cage Blvd
Pharr, Texas 78577

Prime Contract Potential Change Order #003 Rev 2: RFI #7: Jackbore 14" Casing

TO:	City Of Pharr PO Box 1729 Pharr, Texas 78577	**FROM:**	D Wilson Construction Company PO Box 3455 McAllen, Texas 78502
PCO NUMBER/REVISION:	003 Rev 2 / 2	**CONTRACT:**	24-235 - City of Pharr Dock Expansion
REQUEST RECEIVED FROM:	Dennis Covert **(IOC Company, LLC)**	**CREATED BY:**	William Northcutt **(D Wilson Construction Company)**
STATUS:	Pending - In Review	**CREATED DATE:**	1/14/2025
REFERENCE:		**PRIME CONTRACT CHANGE ORDER:**	None
EXECUTED:	No	**SIGNED CHANGE ORDER RECEIVED DATE:**	
SCHEDULE IMPACT:	0 days	**TOTAL AMOUNT:**	$13,742.01

POTENTIAL CHANGE ORDER TITLE: RFI #7: Jackbore 14" Casing

CHANGE REASON: Design Development

POTENTIAL CHANGE ORDER DESCRIPTION: *(The Contract Is Changed As Follows)*
CE #008 - #7: Item 7112-6003 Pressure Water Pipe C-900 (6in) - Bore
RFI# 007 - Jackbore 6" Watermain at crossings.

Item 476 - Jackbore 14 Steel Casing - $352/LF

Please find cost for performing road bores to install 6in water main at 2 locations. IOC is not in agreement with the response to IOC-RFI 5 about the bores being subsidiary to the water line item. We can find nothing to support the RFI response in the contract documents. We have priced this work based on a 32 foot and 36 foot casing installation as a best estimate, no lengths were provided in the plans, if the length directed to install is different the price may be adjusted.

ATTACHMENTS:

RFI 5-response.pdf

#	Budget Code	Description	Amount
1	001.02-100.S	Site - Jackbore 6" Watermain - 68LF	$22,571.20
2	001.02-100.S	7112-6003 Pressure Water Pipe C-900-18 PVC 6" - credit 56 LF @ 80	$(4,480.00)
3	001.02-100.S	400-6007 credit for Cut & Restore Concrete Paving not used. 165 SY @ 31.11	$(5,133.15)
		Subtotal:	**$12,958.05**
		Profit (5.00% Applies to All Line Items):	$647.90
		Bond (1.00% Applies to All Line Items):	$136.06
		Grand Total:	**$13,742.01**

Brownstone Consultants, LLC
P.O. Box 3898
McAllen, Texas 78505

SIGNATURE **DATE**

City Of Pharr
PO Box 1729
Pharr, Texas 78577

SIGNATURE **DATE**

D Wilson Construction Company
PO Box 3455
McAllen, Texas 78502

SIGNATURE **DATE**

Pilar Anzaldua-Garza

From: Pilar Anzaldua-Garza
Sent: Monday, March 17, 2025 4:57 PM
To: Rolando Ayala - Brownstone; David BSTONE; Sabrina Alvarez
Cc: 24-235 Pharr FY16 DAP Emails; Arturo Perez; Claudio Velasco; Emiliano Larios; Roberto Villela; Vanessa J. Garza; Jose Pequeno
Subject: 24235 Pharr FY16 DAP - PCO 003R1 Jackbore Casing 6 Water Main.pdf
Attachments: PCO 003R1 Jackbore Casing 6 Water Main.pdf

Good Afternoon Team:

Following up on our meeting today, attached is PCI 03R1 – modified to the agreed overhead and bond percentage. We will follow up with the others later today. Please advise as soon as possible if we are to proceed with this scope.

Should you have any questions, please don't hesitate to contact me.

PILAR ANZALDUA-GARZA
Assistant Project Manager

Office: (956) 686-9573
Direct Line: (956) 800-6512
Email: PilarA@DWilsonConstruction.com
Web: www.dwilsonconstruction.com
Address: P.O. Box 3455, McAllen, TX 78502-3455

D. WILSON CONSTRUCTION CO.
An Employee-Owned Company

PCO #003

D. Wilson Construction
PO Box 3455
McAllen, Texas 78502
Phone: (956) 686-9573

Project: 24-235 - Pharr FY16 DAP - Agricultural Lab, Dock Expansion I & II
9901 S Cage Blvd
Pharr, Texas 78577

Prime Contract Potential Change Order #003: RFI #7: Jackbore 14" Casing

TO:	City Of Pharr PO Box 1729 Pharr, Texas 78577	**FROM:**	D Wilson Construction Company PO Box 3455 McAllen, Texas 78502
PCO NUMBER/REVISION:	003 / 1	**CONTRACT:**	24-235 - City of Pharr Dock Expansion
REQUEST RECEIVED FROM:	Dennis Covert **(IOC Company, LLC)**	**CREATED BY:**	William Northcutt **(D Wilson Construction Company)**
STATUS:	Pending - In Review	**CREATED DATE:**	1/14/2025
REFERENCE:		**PRIME CONTRACT CHANGE ORDER:**	None
EXECUTED:	No	**SIGNED CHANGE ORDER RECEIVED DATE:**	
SCHEDULE IMPACT:	0 days	**TOTAL AMOUNT:**	$24,176.12

POTENTIAL CHANGE ORDER TITLE: RFI #7: Jackbore 14" Casing

CHANGE REASON: Design Development

POTENTIAL CHANGE ORDER DESCRIPTION: *(The Contract Is Changed As Follows)*
CE #008 - #7: Item 7112-6003 Pressure Water Pipe C-900 (6in) - Bore
RFI# 007 - Jackbore 6" Watermain at crossings.

Item 476 - Jackbore 14 Steel Casing - $352/LF

Please find cost for performing road bores to install 6in water main at 2 locations. IOC is not in agreement with the response to IOC-RFI 5 about the bores being subsidiary to the water line item. We can find nothing to support the RFI response in the contract documents. We have priced this work based on a 32 foot and 36 foot casing installation as a best estimate, no lengths were provided in the plans, if the length directed to install is different the price may be adjusted.

ATTACHMENTS:
RFI 5-response.pdf

#	Budget Code	Description	Amount
1	001.02-100.S	Site - Jackbore 6" Watermain - 68LF	$22,796.90
		Subtotal:	**$22,796.90**
		Profit (5.00% Applies to All Line Items):	$1,139.85
		Bond (1.00% Applies to All Line Items):	$239.37
		Grand Total:	**$24,176.12**

1. Please include the 56ft of the original installation of the waterline as a credit.

2. Please include the credit for the cut and restore activity corresponding the waterline installation.

Brownstone Consultants, LLC	**City Of Pharr**	**D Wilson Construction Company**
P.O. Box 3898	PO Box 1729	PO Box 3455
McAllen, Texas 78505	Pharr, Texas 78577	McAllen, Texas 78502
SIGNATURE **DATE**	**SIGNATURE** **DATE**	**SIGNATURE** **DATE**

IOC Company L.L.C.

CSJ: 0921-02-424,425,433
Owner: The City of Pharr
Prime Contractor: DWilson Construction
Engineer: Halff
IOC Project No: 24-1018
Description: Jack-Bore-Aug 6in Water Main

DESCRIPTION	QTY	UOM	< MANUAL INPUT UNIT/CREW COST >					<---------- TOTAL COST ---------->					
			LBR-SLRY	LBR-HRLY	MTL	EQM	ITEM COMPL	LBR-SLRY	LBR-HRLY	MTL	EQM	ITEM COMPL	LINE TOTAL
LABOR													
Foreman	10.00	HR	$ 50.00					$ 500.00	$ -	$ -	$ -	$ -	$ 500.00
Operator Excavator	10.00	HR		$ 21.00				$ -	$ 210.00	$ -	$ -	$ -	$ 210.00
Operator Loader	10.00	HR		$ 18.00				$ -	$ 180.00	$ -	$ -	$ -	$ 180.00
Laborer	20.00	HR		$ 16.00				$ -	$ 320.00	$ -	$ -	$ -	$ 320.00
								$ -	$ -	$ -	$ -	$ -	$ -
								$ -	$ -	$ -	$ -	$ -	$ -
								$ -	$ -	$ -	$ -	$ -	$ -
EQUIPMENT													
F-250 Pickup Truck	10.00	HR				$ 32.94		$ -	$ -	$ -	$ 329.40	$ -	$ 329.40
Cat 325 Excavator	10.00	HR				$ 111.22		$ -	$ -	$ -	$ 1,112.20	$ -	$ 1,112.20
Cat 938 Loader	10.00	HR				$ 64.62		$ -	$ -	$ -	$ 646.20	$ -	$ 646.20
								$ -	$ -	$ -	$ -	$ -	$ -
								$ -	$ -	$ -	$ -	$ -	$ -
								$ -	$ -	$ -	$ -	$ -	$ -
MATERIAL													
								$ -	$ -	$ -	$ -	$ -	$ -
14in x 0.375 Steel Casing Pipe	68.00	LF			$ 68.89			$ -	$ -	$ 4,684.52	$ -	$ -	$ 4,684.52
Casing Spacers	145.00	EA			$ 23.04			$ -	$ -	$ 3,340.80	$ -	$ -	$ 3,340.80
End Seals	4.00	EA			$ 108.00			$ -	$ -	$ 432.00	$ -	$ -	$ 432.00
Mechanical Joints	4.00	EA			$ 147.71			$ -	$ -	$ 590.84	$ -	$ -	$ 590.84
Star Grip Restraint	8.00	EA			$ 85.72			$ -	$ -	$ 685.76	$ -	$ -	$ 685.76
6in PVC C900 DR 18	80.00	LF			$ 12.50			$ -	$ -	$ 1,000.00	$ -	$ -	$ 1,000.00
								$ -	$ -	$ -	$ -	$ -	$ -
SUBCONTRACTOR													
Electro-Hi (bore 6in water main)	68.00	LF						$ -	$ -	$ -	$ -	$ 3,264.00	$ 3,264.00
Electro-Hi (bore pits)	4.00	EA					$ -	$ -	$ -	$ -	$ -	$ 1,000.00	$ 1,000.00
								$ -	$ -	$ -	$ -	$ -	$ -
								$ -	$ -	$ -	$ -	$ -	$ -
								$ -	$ -	$ -	$ -	$ -	$ -
								$ -	$ -	$ -	$ -	$ -	$ -
MOBILIZATION													
								$ -	$ -	$ -	$ -	$ -	$ -
							SUBTOTAL	$ 500.00	$ 710.00	$ 10,733.92	$ 2,087.80	$ 4,264.00	$ 18,295.72
		OVERTIME FACTOR:	0.00%	OF	$ 710.00		OF LBR		$ -				$ -
		LABOR BURDEN(SALARY):	55.00%	OF	$ 500.00		OF LBR	$ 275.00					$ 275.00
		LABOR BURDEN(HOURLY):	55.00%	OF	$ 710.00		OF LBR		$ 390.50				$ 390.50
		TAX:	0.00%	OF	$ 10,733.92		OF MTL			$ -			$ -
							DIRECT COSTS:	$ 775.00	$ 1,100.50	$ 10,733.92	$ 2,087.80	$ 4,264.00	$ 18,961.22
Compensation				LABOR @			25.00%	$ 125.00	$ 275.13				$ 400.13
				MATERIAL @			25.00%			$ 2,683.48			$ 2,683.48
				EQUIPMENT @			15.00%				$ 313.17		$ 313.17
				SUBCONTRACTOR @			5.00%					$ 213.20	$ 213.20
							COMPENSATION	$ 900.00	$ 1,375.63	$ 13,417.40	$ 2,400.97	$ 4,477.20	$ 22,571.20
				BOND @			1.00%	$ 9.00	$ 13.76	$ 134.17	$ 24.01	$ 44.77	$ 225.71
							TOTAL COST:	$ 909.00	$ 1,389.38	$ 13,551.57	$ 2,424.98	$ 4,521.97	$ 22,796.91

Total conduit spacers quantity should be 11

68 ft/6ft=11.3

There is a total of 55ft. for the road crossings.

Note:

PCO #003

D. Wilson Construction
PO Box 3455
McAllen, Texas 78502
Phone: (956) 686-9573

Project: 24-235 - Pharr FY16 DAP - Agricultural Lab, Dock Expansion I & II
9901 S Cage Blvd
Pharr, Texas 78577

Prime Contract Potential Change Order #003: RFI #7: Jackbore 14" Casing

TO:	City Of Pharr PO Box 1729 Pharr, Texas 78577	**FROM:**	D Wilson Construction Company PO Box 3455 McAllen, Texas 78502
PCO NUMBER/REVISION:	003 / 1	**CONTRACT:**	24-235 - City of Pharr Dock Expansion
REQUEST RECEIVED FROM:	Dennis Covert **(IOC Company, LLC)**	**CREATED BY:**	William Northcutt **(D Wilson Construction Company)**
STATUS:	Pending - In Review	**CREATED DATE:**	1/14/2025
REFERENCE:		**PRIME CONTRACT CHANGE ORDER:**	None
EXECUTED:	No	**SIGNED CHANGE ORDER RECEIVED DATE:**	
SCHEDULE IMPACT:	0 days	**TOTAL AMOUNT:**	$24,176.12

POTENTIAL CHANGE ORDER TITLE: RFI #7: Jackbore 14" Casing

CHANGE REASON: Design Development

POTENTIAL CHANGE ORDER DESCRIPTION: *(The Contract Is Changed As Follows)*
CE #008 - #7: Item 7112-6003 Pressure Water Pipe C-900 (6in) - Bore
RFI# 007 - Jackbore 6" Watermain at crossings.

Item 476 - Jackbore 14 Steel Casing - $352/LF

Please find cost for performing road bores to install 6in water main at 2 locations. IOC is not in agreement with the response to IOC-RFI 5 about the bores being subsidiary to the water line item. We can find nothing to support the RFI response in the contract documents. We have priced this work based on a 32 foot and 36 foot casing installation as a best estimate, no lengths were provided in the plans, if the length directed to install is different the price may be adjusted.

ATTACHMENTS:
RFI 5-response.pdf

#	Budget Code	Description	Amount
1	001.02-100.S	Site - Jackbore 6" Watermain - 68LF	$22,796.90
		Subtotal:	**$22,796.90**
		Profit (5.00% Applies to All Line Items):	$1,139.85
		Bond (1.00% Applies to All Line Items):	$239.37
		Grand Total:	**$24,176.12**

Brownstone Consultants, LLC
P.O. Box 3898
McAllen, Texas 78505

SIGNATURE **DATE**

City Of Pharr
PO Box 1729
Pharr, Texas 78577

SIGNATURE **DATE**

D Wilson Construction Company
PO Box 3455
McAllen, Texas 78502

SIGNATURE **DATE**

PCO #003

D. Wilson Construction
PO Box 3455
McAllen, Texas 78502
Phone: (956) 686-9573
Fax: (956) 686-3270

Project: 24-235 - Pharr FY16 DAP - Agricultural Lab, Dock Expansion I & II
9901 S Cage Blvd
Pharr, Texas 78577

Prime Contract Potential Change Order #003: RFI #7: Jackbore 14" Casing

TO:	City Of Pharr PO Box 1729 Pharr, Texas 78577	**FROM:**	D Wilson Construction Company PO Box 3455 McAllen, Texas 78502
PCO NUMBER/REVISION:	003 / 1	**CONTRACT:**	24-235 - City of Pharr Dock Expansion
REQUEST RECEIVED FROM:	Dennis Covert **(IOC Company, LLC)**	**CREATED BY:**	William Northcutt **(D Wilson Construction Company)**
STATUS:	Pending - In Review	**CREATED DATE:**	1/14/2025
REFERENCE:		**PRIME CONTRACT CHANGE ORDER:**	None
EXECUTED:	No	**SIGNED CHANGE ORDER RECEIVED DATE:**	
SCHEDULE IMPACT:	0 days	**TOTAL AMOUNT:**	$26,992.63

POTENTIAL CHANGE ORDER TITLE: RFI #7: Jackbore 14" Casing

CHANGE REASON: Design Development

POTENTIAL CHANGE ORDER DESCRIPTION: *(The Contract Is Changed As Follows)*
CE #008 - #7: Item 7112-6003 Pressure Water Pipe C-900 (6in) - Bore
RFI# 007 - Jackbore 6" Watermain at crossings.

Item 476 - Jackbore 14 Steel Casing - $352/LF

Please find cost for performing road bores to install 6in water main at 2 locations. IOC is not in agreement with the response to IOC-RFI 5 about the bores being subsidiary to the water line item. We can find nothing to support the RFI response in the contract documents. We have priced this work based on a 32 foot and 36 foot casing installation as a best estimate, no lengths were provided in the plans, if the length directed to install is different the price may be adjusted.

ATTACHMENTS:
RFI 5-response.pdf

#	Budget Code	Description	Amount
1	001.02-100.S	Site - Jackbore 6" Watermain - 68LF	$22,796.90
		Subtotal:	**$22,796.90**
		Overhead (10.00% Applies to All Line Items):	$2,279.69
		Profit (5.00% Applies to All Line Items):	$1,253.83
		Insurance (1.50% Applies to All Line Items):	$394.96
		Bond (1.00% Applies to All Line Items):	$267.25
		Grand Total:	**$26,992.63**

Brownstone Consultants, LLC	**City Of Pharr**	**D Wilson Construction Company**
P.O. Box 3898	PO Box 1729	PO Box 3455
McAllen, Texas 78505	Pharr, Texas 78577	McAllen, Texas 78502
SIGNATURE **DATE**	**SIGNATURE** **DATE**	**SIGNATURE** **DATE**

PCO #003

D. Wilson Construction
PO Box 3455
McAllen, Texas 78502
Phone: (956) 686-9573
Fax: (956) 686-3270

Project: 24-235 - Pharr FY16 DAP - Agricultural Lab, Dock Expansion I & II
9901 S Cage Blvd
Pharr, Texas 78577

Prime Contract Potential Change Order #003: RFI #7: Jackbore 14" Casing

TO:	City Of Pharr PO Box 1729 Pharr, Texas 78577	**FROM:**	D Wilson Construction Company PO Box 3455 McAllen, Texas 78502
PCO NUMBER/REVISION:	003 / 0	**CONTRACT:**	24-235 - City of Pharr Dock Expansion
REQUEST RECEIVED FROM:	Dennis Covert **(IOC Company, LLC)**	**CREATED BY:**	William Northcutt **(D Wilson Construction Company)**
STATUS:	Pending - In Review	**CREATED DATE:**	1/14/2025
REFERENCE:		**PRIME CONTRACT CHANGE ORDER:**	None
EXECUTED:	No	**SIGNED CHANGE ORDER RECEIVED DATE:**	
SCHEDULE IMPACT:	0 days	**TOTAL AMOUNT:**	$23,937.00

POTENTIAL CHANGE ORDER TITLE: RFI #7: Jackbore 14" Casing

CHANGE REASON: Design Development

POTENTIAL CHANGE ORDER DESCRIPTION: *(The Contract Is Changed As Follows)*
CE #008 - #7: Item 7112-6003 Pressure Water Pipe C-900 (6in) - Bore
RFI# 007 - Jackbore 6" Watermain at crossings.

Item 476 - Jackbore 14 Steel Casing - $352/LF

Please find cost for performing road bores to install 6in water main at 2 locations. IOC is not in agreement with the response to IOC-RFI 5 about the bores being subsidiary to the water line item. We can find nothing to support the RFI response in the contract documents. We have priced this work based on a 32 foot and 36 foot casing installation as a best estimate, no lengths were provided in the plans, if the length directed to install is different the price may be adjusted.

ATTACHMENTS:
RFI 5-response.pdf

#	Budget Code	Description	Amount
1	001.02-100.S	Site - Jackbore 6" Watermain - 68LF	$23,937.00
		Grand Total:	**$23,937.00**

Brownstone Consultants, LLC
P.O. Box 3898
McAllen, Texas 78505

City Of Pharr
PO Box 1729
Pharr, Texas 78577

D Wilson Construction Company
PO Box 3455
McAllen, Texas 78502

SIGNATURE **DATE** **SIGNATURE** **DATE** **SIGNATURE** **DATE**

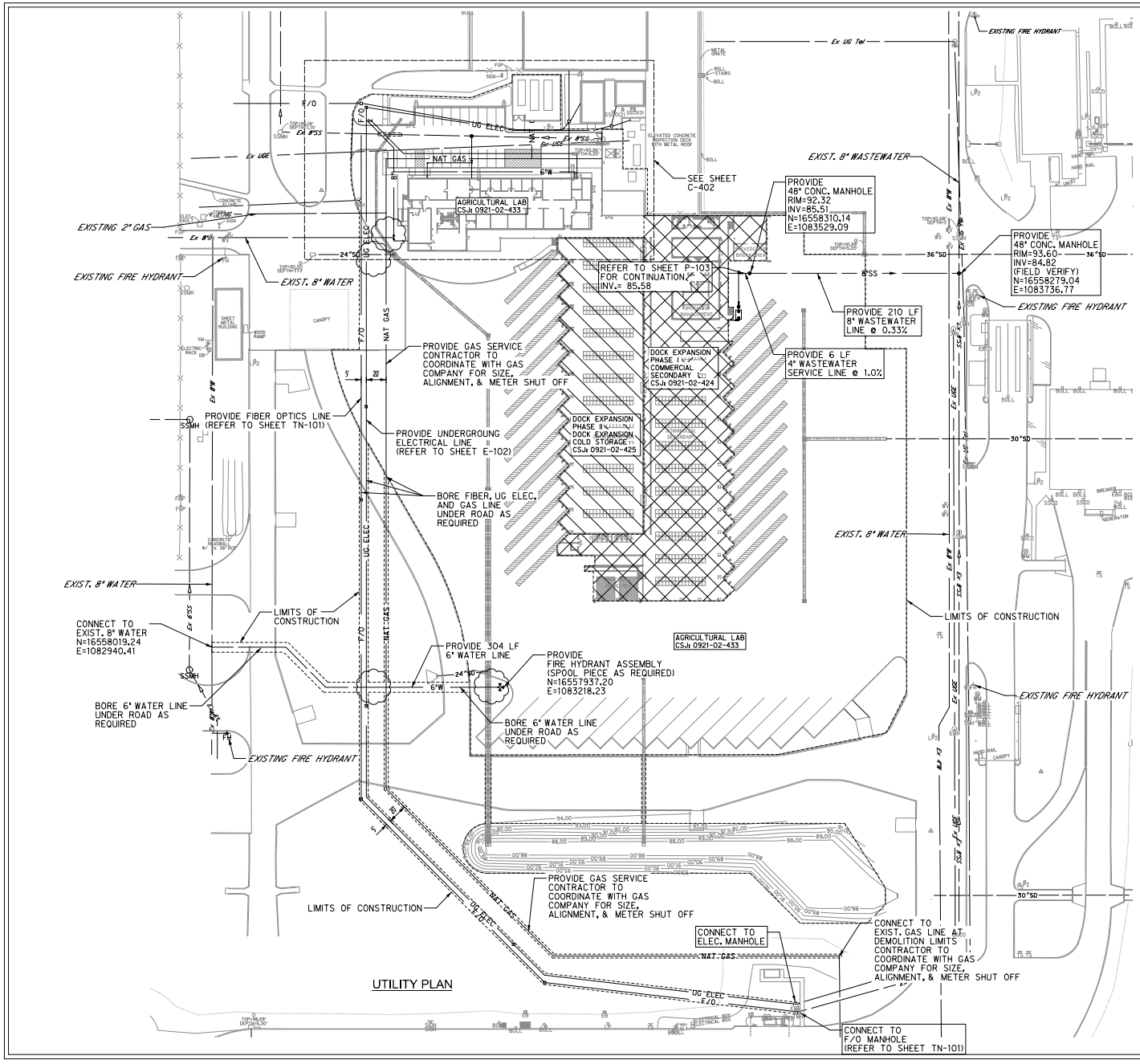

N

0 25 50 75 100

SCALE: 1"=50'

SHEET SUMMARY (CSJ: 0921-02-433)			
ITEM CODE	DESCRIPTION	UNIT	QUANTITY
7017-6004	SANITARY SEWER (8IN) (PVC)(C900)	LF	0
7017-6005	SANITARY SEWER (8IN) (PVC)(C900)	LF	210
7017-6051	MANHOLE (SANITARY SEWER) (4' DIA)	EA	2
7017-6015	SANITARY SEWER (4 IN) (PVC) (SDR 26)	LF	6
7017-6200	YARD CLEAN OUTS	EA	8
7017-6201	SAND/OIL SEPARATOR	EA	1
7112-6042	BOX, MISC VALVES, FITTINGS	LS	0
7112-6043	DOUBLE CHECK VALVE BACKFLOW ASSEMBLY	LS	0
7112-6044	VAULT, MISC VALVES, FITTINGS	LS	0
7266-6036	ENCASEMENT PIPE (16")	LF	0

SHEET SUMMARY (CSJ: 0921-02-433)			
ITEM CODE	DESCRIPTION	UNIT	QUANTITY
7112-6002	PRESSURE WATER PIPE C-900 DR-18 PVC (8")	LF	0
7112-6003	PRESSURE WATER PIPE C-900 DR-18 PVC (6")	LF	304
7112-6004	CONNECT TO EXISTING WATER LINE (8")	EA	1
7112-6011	GATE VALVE W/ BOX ASSEMBLY (8")	EA	0
7112-6015	FIRE HYDRANT, VALVE & ASSEMBLY	EA	1
7049-6373	SERVICE LINE (SHORT SIDE)(2-1/2" TO 4")	LF	0
7112-6041	COMPOUND WATER METER 2-1/2" DIA	EA	0
7112-6046	4" FDC LINE	LF	0
7112-6045	FREE STANDING FDC	EA	0

SHEET SUMMARY (CSJ: 0921-02-433)			
ITEM CODE	DESCRIPTION	UNIT	QUANTITY
7401-6006	GAS PIPE 2" DIA.	LF	1055

ISSUED FOR CONSTRUCTION

STATE OF TEXAS
ROBERT L. SAENZ
82072
REGISTERED PROFESSIONAL ENGINEER
5-15-2024

Pharr
CITY OF PHARR, TEXAS

GSA
GENERAL SERVICES ADMINISTRATION
819 TAYLOR STREET
FORT WORTH, TEXAS 76102-6195
817-978-3334
www.gsa.gov

TEXAS DEPARTMENT OF TRANSPORTATION

halff
5000 WEST MILITARY, SUITE 100, McALLEN, TEXAS 78503
TEL (956) 686-0288 FAX (956) 686-0282 TBPE FIRM #F-312

PHARR FY16 DAP - IMPORT DOCK AND AG LAB IMPROVEMENTS

UTILITY PLAN

SCALE: AS NOTED	SHEET 1 OF 1			
DN:	CONT	SECT	JOB	HIGHWAY
CK DN:	921	02	424,425,433	PHARR INT. BRIDGE
DW:				
CK DW: RD	DIST	COUNTY		SHEET NO.
TR:				
CK TR:	PHR	HIDALGO		C-401

D. Wilson Construction
PO Box 3455
McAllen, Texas 78502
P: (956) 686-9573
F: (956) 686-3270

Project: 24-235 Pharr FY16 DAP - Agricultural Lab, Dock Expansion I & II
9901 S Cage Blvd
Pharr, Texas 78577

RFI #7: Item 7112-6003 Pressure Water Pipe C-900 (6in) - Bore

Status	Closed on 12/19/24		
To	Sabrina Alvarez (Brownstone Consultants, LLC) Rolando Ayala (Brownstone Consultants, LLC) David Chacon (Brownstone Consultants, LLC)	**From**	Shukan Bhakta (D Wilson Construction Company) PO Box 3455 McAllen, Texas 78502
Date Initiated	Dec 2, 2024	**Due Date**	Dec 9, 2024
Location		**Project Stage**	
Cost Impact		**Schedule Impact**	
Spec Section		**Cost Code**	
Drawing Number	C-401	**Reference**	
Linked Drawings	C-303, C-401		
Received From	Dennis Covert (IOC Company, LLC)	**Sub Job**	
Copies To	Vanessa Garza (D Wilson Construction Company), Sabas Lopez (D Wilson Construction Company), William Northcutt (D Wilson Construction Company), Roberto Villela (D Wilson Construction Company)		

Activity

Question

Question from Shukan Bhakta D Wilson Construction Company *on Monday, Dec 2, 2024 at 11:33 AM CST*

Plan Sheet C-401 shows 304 LF of 6in Water Main for Item 7112-6003. At two locations along the main the plan states, "Bore 6" water line under road as required". The bid estimate does not include an item to pay for bored water main pipe, nor are there limits of the bores identified other than "as required'. The plans do not include a detail to show casing size and length to be used with the bored section of the water main. Please provide details of the bore installation and method of payment.

Attachments
RFI#5-Item 7112-6003 Water Main 6in-bore.pdf

Official Response

Response from Shukan Bhakta D Wilson Construction Company *on Thursday, Dec 19, 2024 at 04:55 PM CST*

Response from Solveig Klassen, PE on 12/18/2024:
TxDOT officials have confirmed that Boring dry and wet utilities is required under the existing concrete road. The cost of Boring is subsidiary to the installation of the utility and should be included in the utility line item cost. TxDOT will allow open cut installation of the drainage pipes, only. Attached are the TxDOT provided details for the concrete repair of the drive.

Attachments
RFI #07 - Item 7112-6003 Pressure Water Pipe C-900 (6in) - Bore - Response.pdf

RFI detail

#7 Item 7112-6003 Pressure Water Pipe C-900 (6in) - Bore

Status	**Open** In Review
Created on	Dec 3, 2024 by **Sabrina Alvarez** (Brownstone Consultants)
RFI type	Default RFI workflow
Ball in court	**Rolando Ayala**
Due date	Dec 9, 2024

Question

Plan Sheet C-401 shows 304 LF of 6in Water Main for Item 7112-6003. At two locations along the main the plan states, "Bore
6" water line under road as required". The bid estimate does not include an item to pay for bored water main pipe, nor are
there limits of the bores identified other than "as required'. The plans do not include a detail to show casing size and length to
be used with the bored section of the water main. Please provide details of the bore installation and method of payment.

References and Attachments

Files (1)

- 07 - Item 7112-6003 Pressure Water Pipe C-900 (6in) -Bore.pdf

Impact

Cost impact	-
Schedule impact	-

Other attributes

Priority	Normal
Discipline	-

Category	-
Location	-
Location details	-
External id	-
Co-reviewer(s)	**Sabrina Alvarez** (Brownstone Consultants)

Activities	By	At
Sabrina Alvarez added a reference to a File **07 - Item 7112-6003 Pressure Water Pipe C-900 (6in) -Bore.pdf**	**Sabrina Alvarez**	Dec 3, 2024, 8:42 AM CST
Sabrina Alvarez (Brownstone Consultants) created this RFI in **Open** In Review status and set Ball in court to **Rolando Ayala**.	**Sabrina Alvarez**	Dec 3, 2024, 8:42 AM CST

D. Wilson Construction
PO Box 3455
McAllen, Texas 78502
P: (956) 686-9573
F: (956) 686-3270

Project: 24-235 Pharr FY16 DAP - Agricultural Lab, Dock Expansion I & II
9901 S Cage Blvd
Pharr, Texas 78577

RFI #7: Item 7112-6003 Pressure Water Pipe C-900 (6in) - Bore

Status	Open		
To	Sabrina Alvarez (Brownstone Consultants, LLC) Rolando Ayala (Brownstone Consultants, LLC) David Chacon (Brownstone Consultants, LLC)	**From**	Shukan Bhakta (D Wilson Construction Company) PO Box 3455 McAllen, Texas 78502
Date Initiated	Dec 2, 2024	**Due Date**	Dec 9, 2024
Location		**Project Stage**	
Cost Impact		**Schedule Impact**	
Spec Section		**Cost Code**	
Drawing Number	C-401	**Reference**	
Linked Drawings			
Received From	Dennis Covert (IOC Company, LLC)	**Sub Job**	
Copies To	Vanessa Garza (D Wilson Construction Company), Sabas Lopez (D Wilson Construction Company), William Northcutt (D Wilson Construction Company), Roberto Villela (D Wilson Construction Company)		

Activity

Question

Question from Shukan Bhakta D Wilson Construction Company *on Monday, Dec 2, 2024 at 11:33 AM CST*

Plan Sheet C-401 shows 304 LF of 6in Water Main for Item 7112-6003. At two locations along the main the plan states, "Bore 6" water line under road as required". The bid estimate does not include an item to pay for bored water main pipe, nor are there limits of the bores identified other than "as required'. The plans do not include a detail to show casing size and length to be used with the bored section of the water main. Please provide details of the bore installation and method of payment.

Attachments
RFI#5-Item 7112-6003 Water Main 6in-bore.pdf

Awaiting an Official Response

IOC Company L.L.C.
9312 E. Curve Road, Edinburg, Texas 78542
956.380.2897 Office / 956.380.4085 Fax

Request For Information: Item 7112-6003 Pressure Water Pipe C-900 (6in) **RFI #** 5

Requested By: Dennis Covert

Date: 11/27/2024 **Date Required:** 12/10/2024

To: D.Wilson Construction Co.
P.O. Box 3455
McAllen, Texas 78502

Attn: William Northcutt

Project Number: 24235-02100

Project Name: Pharr FY16 DAP- Agrucultural Lab, Dock expansion I & II

Reference: 7112-6003 Presr Wtr Pipe C-900 DR-18 PVC (6in)

Ref. Drawings: C-401

Attachments: C-401

Work Impacted: Unknown **Schedule Impact:** Unknown **Cost Impact:** Unknown

REQUEST:

Plan Sheet C-401 shows 304 LF of 6in Water Main for Item 7112-6003. At two locations along the main the plan states, "Bore 6 water line under road as required". The bid estimate does not include an item to pay for bored water main pipe, nor are there limits of the bores identified other than "as required'. The plans do not include a detail to show casing size and length to be used with the bored section of the water main. Please provide details of the bore installation and method of payment.

Proposed Solution (If Applicable)

Response:

TxDOT officials have confirmed that Boring dry and wet utilities is required under the existing concrete road. The cost of Boring is subsidiary to the installation of the utility and should be included in the utility line item cost. TxDOT will allow open cut installation of the drainage pipes, only. Attached are the TxDOT provided details for the concrete repair of the drive.

Response By: Solveig Klassen, PE **Date:** 12/18/2024

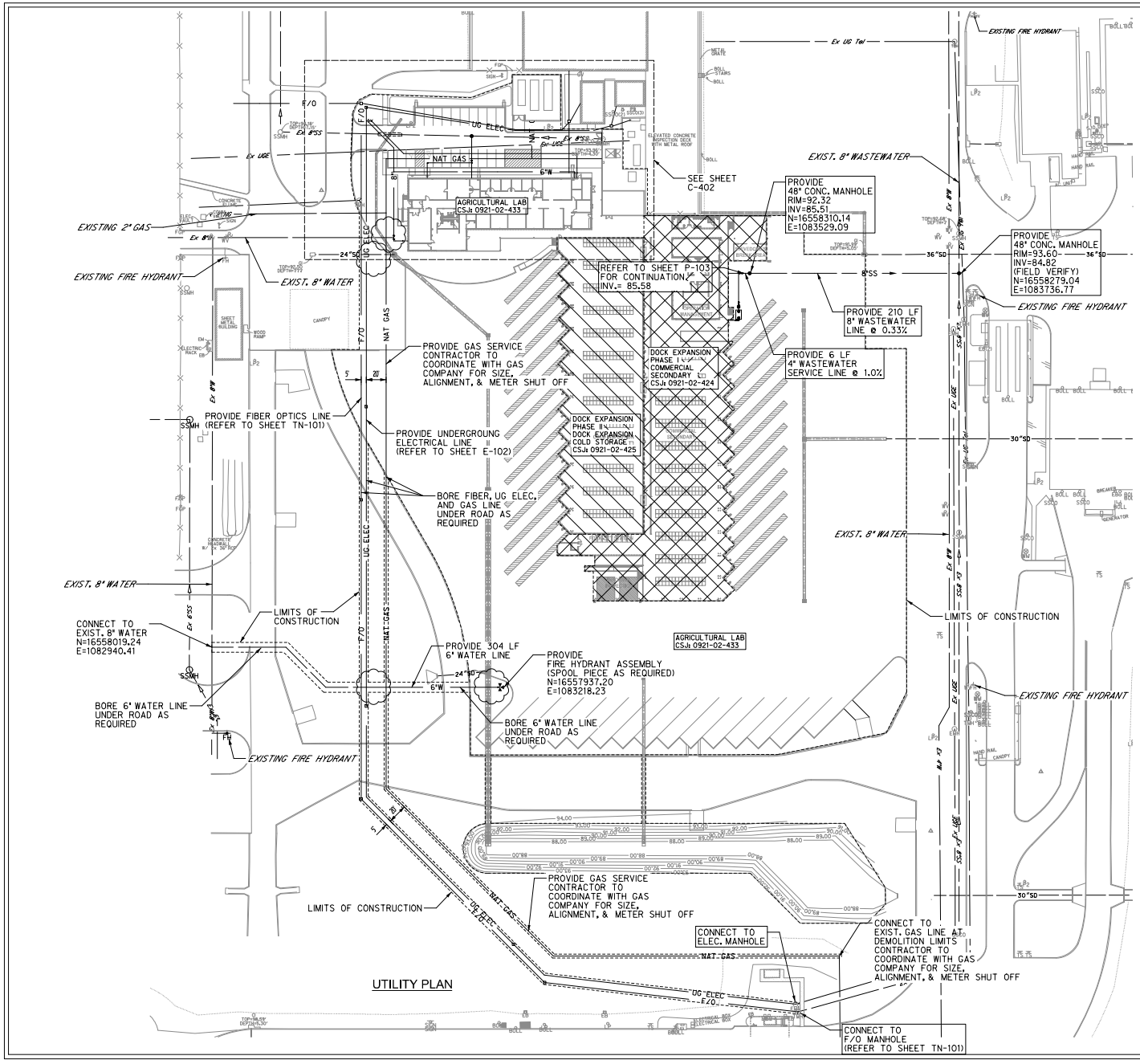

N

0 25 50 75 100

SCALE: 1"=50'

SHEET SUMMARY (CSJ: 0921-02-433)			
ITEM CODE	DESCRIPTION	UNIT	QUANTITY
7017-6004	SANITARY SEWER (8IN) (PVC)(C900)	LF	0
7017-6005	SANITARY SEWER (8IN) (PVC)(C900)	LF	210
7017-6051	MANHOLE (SANITARY SEWER) (4' DIA)	EA	2
7017-6015	SANITARY SEWER (4 IN) (PVC) (SDR 26)	LF	6
7017-6200	YARD CLEAN OUTS	EA	8
7017-6201	SAND/OIL SEPARATOR	EA	1
7112-6042	BOX, MISC VALVES, FITTINGS	LS	0
7112-6043	DOUBLE CHECK VALVE BACKFLOW ASSEMBLY	LS	0
7112-6044	VAULT, MISC VALVES, FITTINGS	LS	0
7266-6036	ENCASEMENT PIPE (16")	LF	0

SHEET SUMMARY (CSJ: 0921-02-433)			
ITEM CODE	DESCRIPTION	UNIT	QUANTITY
7112-6002	PRESSURE WATER PIPE C-900 DR-18 PVC (8")	LF	0
7112-6003	PRESSURE WATER PIPE C-900 DR-18 PVC (6")	LF	304
7112-6004	CONNECT TO EXISTING WATER LINE (8")	EA	1
7112-6011	GATE VALVE W/ BOX ASSEMBLY (8")	EA	0
7112-6015	FIRE HYDRANT, VALVE & ASSEMBLY	EA	1
7049-6373	SERVICE LINE (SHORT SIDE)(2-1/2" TO 4")	LF	0
7112-6041	COMPOUND WATER METER 2-1/2" DIA	EA	0
7112-6046	4" FDC LINE	LF	0
7112-6045	FREE STANDING FDC	EA	0

SHEET SUMMARY (CSJ: 0921-02-433)			
ITEM CODE	DESCRIPTION	UNIT	QUANTITY
7401-6006	GAS PIPE 2" DIA.	LF	1055

ISSUED FOR CONSTRUCTION

STATE OF TEXAS
ROBERT L. SAENZ
82072
REGISTERED PROFESSIONAL ENGINEER
5-15-2024

Pharr
CITY OF PHARR, TEXAS

GSA
GENERAL SERVICES ADMINISTRATION
819 TAYLOR STREET
FORT WORTH, TEXAS 76102-6195
817-978-3334
www.gsa.gov

TEXAS DEPARTMENT OF TRANSPORTATION

halff
5000 WEST MILITARY, SUITE 100, McALLEN, TEXAS 78503
TEL (956) 686-0288 FAX (956) 686-0282 TBPE FIRM #F-312

PHARR FY16 DAP - IMPORT DOCK AND AG LAB IMPROVEMENTS

UTILITY PLAN

SCALE: AS NOTED	SHEET 1 OF 1			
DN:	CONT	SECT	JOB	HIGHWAY
CK DN:	921	02	424,425,433	PHARR INT. BRIDGE
DW:				
CK DW: RD	DIST	COUNTY		SHEET NO.
TR:				
CK TR:	PHR	HIDALGO		C-401

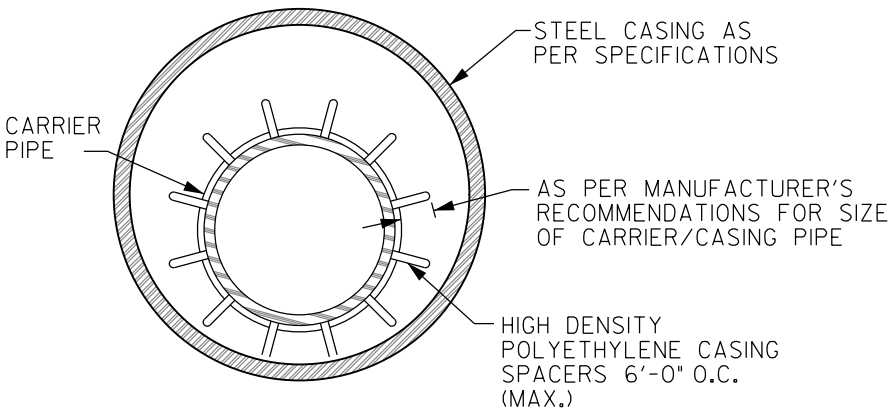

INSTALLATION		
CARRIER PIPE SIZE	PIPE CASING SIZE	MIN. WALL THICKNESS
2"	6"	0.375"
4"	10"	0.375"
6"	14"	0.375"
8"	16"	0.375"
10"	18"	0.375"
12"	20"	0.375"
14", 15"	24"	0.375"
16"	26"	0.375"
18"	30"	0.375"
24"	36"	0.375"
36"	48"	0.625"

PIPE ENCASEMENT DETAIL

NTS

GENERAL NOTES:

1. ALL STEEL CASING SHALL BE WELDED.
2. STEEL CASING SHALL BE CLOSED AT EACH END USING BRICK OR BLOCK AND MORTAR GROUTED.
3. CASING SPACERS SHALL BE USED TO INSTALL THE CARRIER PIPE INSIDE THE ENCASEMENT PIPE. CASING SPACERS SHALL FASTEN TIGHTLY ONTO THE CARRIER PIPE SO THAT WHEN THE CARRIER PIPE IS BEING INSTALLED THE SPACERS WILL NOT MOVE ALONG THE PIPELINE. CASING SPACERS SHALL BE DOUBLED ON EACH END OF THE ENCASEMENT.
4. PROJECTION TYPE CASING SPACERS SHALL BE CONSTRUCTED SECTIONS OF HIGH DENSITY POLYETHYLENE. THE FLEXIBLE SECTIONS SHALL BE JOINED TOGETHER AROUND THE PIPE TO PROVIDE A MINIMUM OF 16 PLASTIC PROJECTIONS PER SPACER SECTION.
5. INSTALLATION AND SIZE OF SPACERS SHALL BE PER MANUFACTURER'S RECOMMENDATIONS.

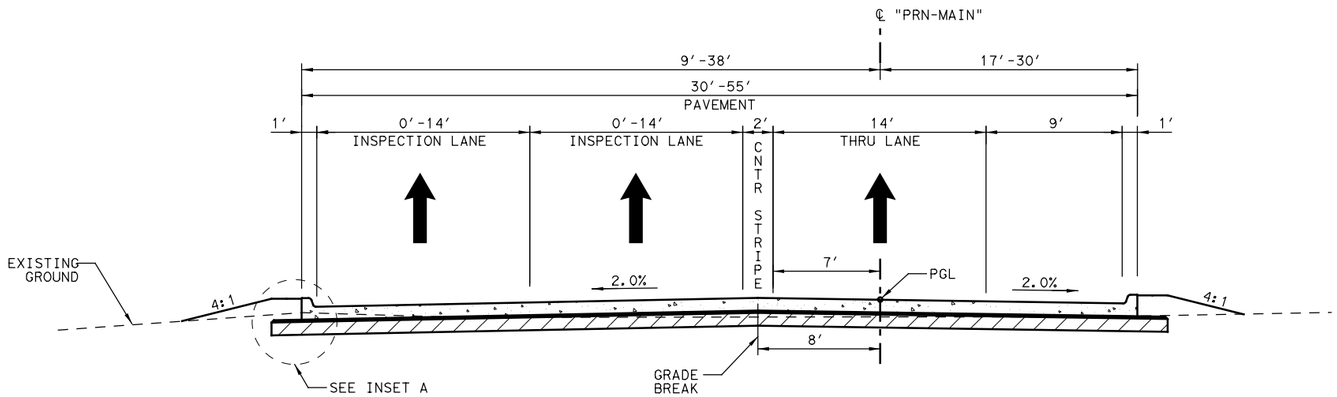

STA 11+12.98 TO STA 15+63.00

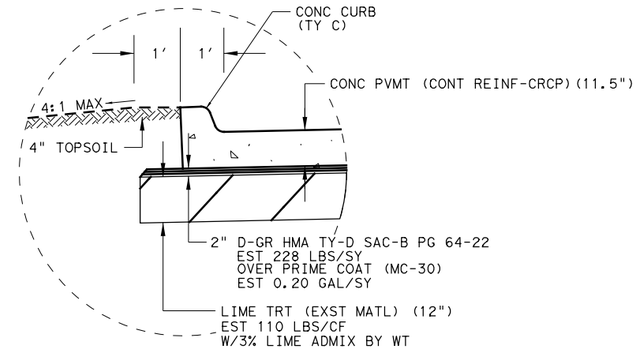

INSET A

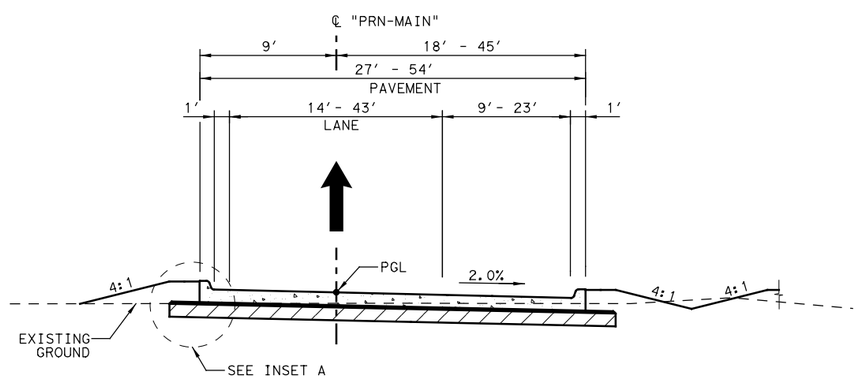

STA 15+63.00 TO STA 17+67.27

NO.	DATE	REVISION	APPR BY

STATE OF TEXAS
JOSE M. GONZALEZ
97348
LICENSED PROFESSIONAL ENGINEER

JOSE M. GONZALEZ, P.E. — DATE 07/20/18

Texas Department of Transportation
© TxDOT 2018

HDR Engineering, Inc.
613 NW Loop 410, Suite 700
San Antonio, TX 78216
Texas P.E. Firm Registration No. F-754

BORDER SAFETY INSPECTION FACILITY
PHARR-REYNOSA NORTH ENTRANCE

TYPICAL SECTIONS
MAIN ROAD

N. T. S. — SHEET 3 OF 6

DSN: BD	STATE	FED RD. DIV NO.	FEDERAL PROJECT NO.			HIGHWAY NO.
CK: JMG	TEXAS	6				VA
DRN: BD	COUNTY	DIST.	CONT.	SECT.	JOB	SHEET NO.
CK: JMG	HIDALGO	PHARR	0921	02	173	7

User Name: BDERINGE Pentable: 0000000002601 92.tbl Plotdriver: TXDOT*PDF*BW.pltcfg
File Name: PRNTYP03.dgn Date and Time Plotted: 7/19/2018 1:43:38 PM

DISCLAIMER:
The use of this standard is governed by the "Texas Engineering Practice Act". No warranty of any kind is made by TxDOT for any purpose whatsoever. TxDOT assumes no responsibility for the conversion of this standard to other formats or for incorrect results or damages resulting from its use.

TABLE NO. 1 STEEL BAR SIZE AND SPACING						
TYPE PAVEMENT	SLAB THICKNESS AND BAR SIZE		LONGITUDINAL*		TRANSVERSE*	
			REGULAR BARS	TIEBARS	BARS	TIEBARS
	T (IN.)	BAR SIZE	SPACING (IN.)	SPACING (IN.)	SPACING (IN.)	SPACING (IN.)
CRCP	6.0	#5	7.5	7.5	24	24
	6.5		7.0	7.0		
	7.0		6.5	6.5		
	7.5		6.0	6.0		
	8.0	#6	9.0	9.0	24	24
	8.5		8.5	8.5		
	9.0		8.0	8.0		
	9.5		7.5	7.5		
	10.0		7.0	7.0		
	10.5		6.75	6.75		
	11.0		6.5	6.5		
	11.5		6.25	6.25		
	≥12.0		6.0	6.0		
JRCP	<8.0	#5	24.0	12.0	24	24
	≥8.0	#6	24.0	12.0	24	24
CPCD	<8.0	#5	NONE	12.0	NONE	24
	≥8.0	#6	NONE	12.0	NONE	24

* USE 12" SPACING AS FIRST AND LAST SPACING AT END OR SIDE FOR ALL BARS.

GENERAL NOTES

1. ITEM 361, "REPAIR OF CONCRETE PAVEMENT" SHALL GOVERN FOR THIS WORK.
2. MULTIPLE PIECE TIEBARS SHALL BE USED WHEN THE REPAIR AREA MUST BE PLACED IN TWO STAGES DUE TO SEQUENCE OF CONSTRUCTION.
3. FULL DEPTH SAW CUTS SHALL BE MADE AROUND THE PERIMETER OF THE AREA TO BE REPAIRED. THE CUT SHALL BE MADE AT A RIGHT ANGLE TO THE PAVEMENT EDGE AND TO THE CENTER LINE OF THE PAVEMENT.
4. AT LEAST ONE LONGITUDINAL FULL DEPTH SAW CUT SHALL BE AT AN EXISTING LONGITUDINAL JOINT.
5. ADDITIONAL SAW CUTS MAY BE REQUIRED WITHIN THE AREA OF THE REPAIR TO FACILITATE REMOVAL OF THE CONCRETE OR TO ALLEVIATE BINDING OF THE FULL DEPTH SAW CUT AT THE REPAIR EDGE.
6. THE SAW CUTS WHICH EXTEND OUTSIDE THE AREA OF THE REPAIR WILL BE CLEANED AND FILLED WITH A CEMENTITIOUS GROUT APPROVED BY THE ENGINEER.
7. EXISTING LONGITUDINAL AND TRANSVERSE JOINTS REMOVED DUE TO REPAIR OPERATION SHOULD BE RESTORED IN ACCORDANCE WITH STANDARD SHEET "CONCRETE PAVING DETAILS, JOINT SEALS."

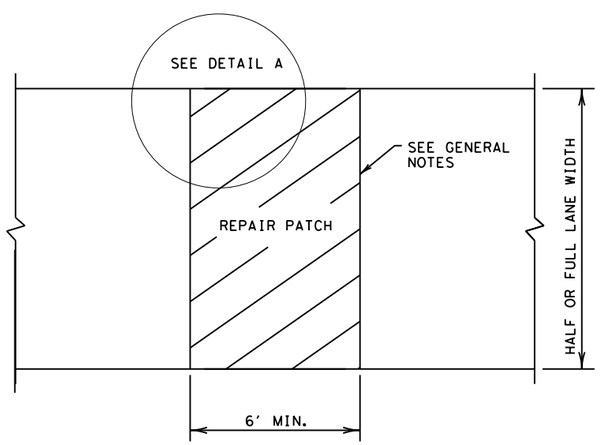

PLAN VIEW

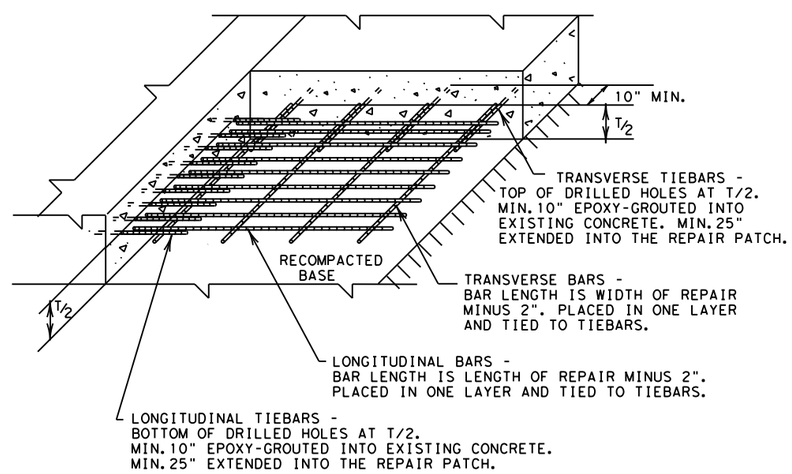

DETAIL A
GROUTED TIEBARS & REINFORCEMENT

FULL-DEPTH REPAIR OF CRCP, JRCP, AND CPCD

GENERAL NOTES

1. ITEM 361, "REPAIR OF CONCRETE PAVEMENT" SHALL GOVERN FOR THIS WORK.
2. THE SAW CUTS WHICH EXTEND OUTSIDE THE AREA OF THE REPAIR WILL BE CLEANED AND FILLED WITH A CEMENTITIOUS GROUT APPROVED BY THE ENGINEER.
3. EXISTING LONGITUDINAL AND TRANSVERSE JOINTS REMOVED DUE TO REPAIR OPERATION SHOULD BE RESTORED IN ACCORDANCE WITH STANDARD SHEET "CONCRETE PAVING DETAILS, JOINT SEALS."

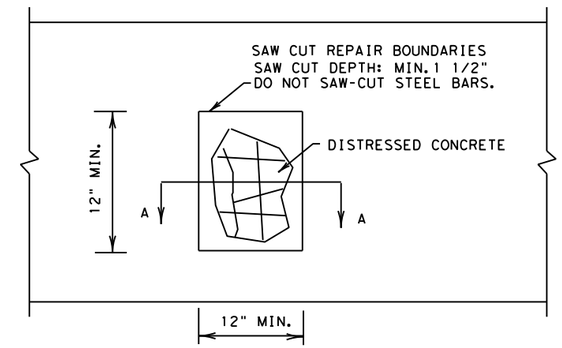

PLAN VIEW

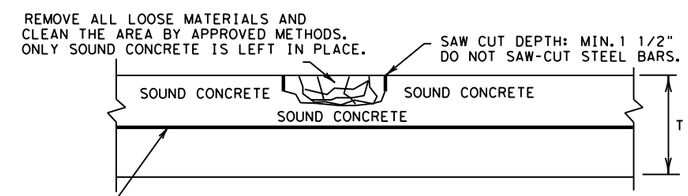

LONGITUDINAL STEEL BARS:

*REPAIR AREAS MAY BE ADJUSTED AFTER REMOVING DISTRESSED CONCRETE. SWITCH THE HALF-DEPTH REPAIR TO FULL-DEPTH REPAIR IF EXPOSED EXISTING LONGITUDINAL BARS ARE DEFICIENT, AS APPROVED. COMPENSATION WILL BE MADE FOR UNEXPECTED VOLUMES OF REPAIR AREAS OR CHANGES IN SCOPE OF WORK.

*INCREASE THE REPAIR AREA AND PERFORM A FULL-DEPTH REPAIR AS DIRECTED IF LONGITUDINAL STEEL BARS WERE DAMAGED BY THE REMOVAL OPERATIONS. NO ADDITIONAL COMPENSATION WILL BE MADE.

SECTION A-A

HALF-DEPTH REPAIR

Texas Department of Transportation — Design Division Standard

REPAIR OF CONCRETE PAVEMENT

REPCP-14

FILE: repcp14.dgn	DN: TxDOT	CK: AN	DW: HC	CK: AN
© TxDOT: DECEMBER 2014	CONT	SECT	JOB	HIGHWAY
REVISIONS				
	DIST	COUNTY		SHEET NO.

DATE:
FILE:

DISCLAIMER:
The use of this standard is governed by the "Texas Engineering Practice Act". No warranty of any kind is made by TxDOT for any purpose whatsoever. TxDOT assumes no responsibility for the conversion of this standard to other formats or for incorrect results or damages resulting from its use.

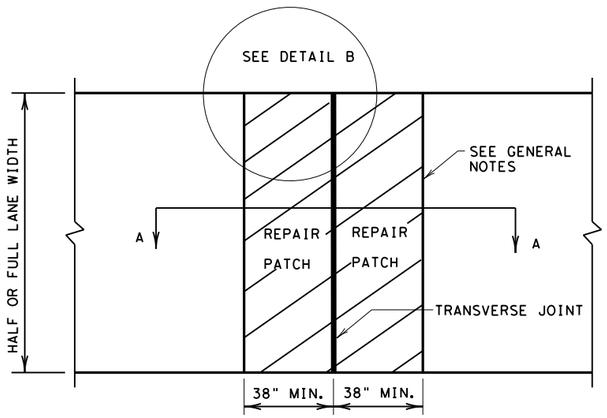

PLAN VIEW

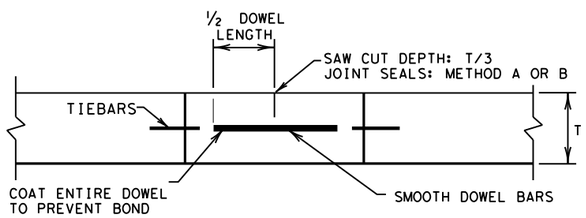

SECTION A-A

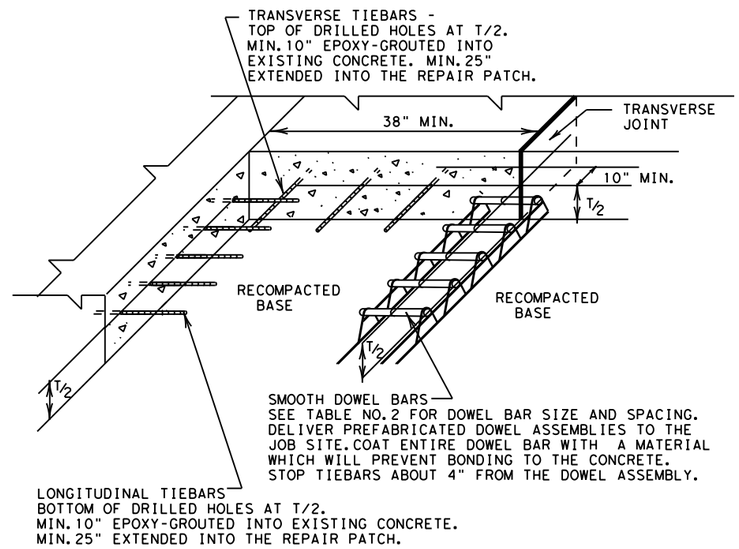

DETAIL B
GROUTED TIEBARS & DOWELS

GENERAL NOTES

1. ITEM 361, "REPAIR OF CONCRETE PAVEMENT" SHALL GOVERN FOR THIS WORK.
2. MULTIPLE PIECE TIEBARS SHALL BE USED WHEN THE REPAIR AREA MUST BE PLACED IN TWO STAGES DUE TO SEQUENCE OF CONSTRUCTION.
3. FULL DEPTH SAW CUTS SHALL BE MADE AROUND THE PERIMETER OF THE AREA TO BE REPAIRED. THE CUT SHALL BE MADE AT A RIGHT ANGLE TO THE PAVEMENT EDGE AND TO THE CENTER LINE OF THE PAVEMENT.
4. AT LEAST ONE LONGITUDINAL FULL DEPTH SAW CUT SHALL BE AT AN EXISTING LONGITUDINAL JOINT.
5. ADDITIONAL SAW CUTS MAY BE REQUIRED WITHIN THE AREA OF THE REPAIR TO FACILITATE REMOVAL OF THE CONCRETE OR TO ALLEVIATE BINDING OF THE FULL DEPTH SAW CUT AT THE REPAIR EDGE.
6. THE SAW CUTS WHICH EXTEND OUTSIDE THE AREA OF THE REPAIR WILL BE CLEANED AND FILLED WITH A CEMENTITIOUS GROUT APPROVED BY THE ENGINEER.
7. EXISTING LONGITUDINAL AND TRANSVERSE JOINTS REMOVED DUE TO REPAIR OPERATION SHOULD BE RESTORED IN ACCORDANCE WITH STANDARD SHEET "CONCRETE PAVING DETAILS, JOINT SEALS."
8. DOWEL BAR PLACEMENT TOLERANCE SHALL BE +/- 1/4 IN. HORIZONTALLY AND VERTICALLY UNLESS OTHERWISE SPECIFIED. WHERE DOWEL BAR BASKETS ARE USED, REMOVE THE SHIPPING WIRES.

TABLE NO. 2 DOWELS (SMOOTH BARS)

PAVEMENT THICKNESS (INCHES)	SIZE AND DIA.	LENGTH (IN.)	SPACING (IN.)
<10	#8 (1 IN.)	18.0	12.0
≥10	#10 (1 1/4 IN.)		

REPAIR OF TRANSVERSE JOINT OF CPCD

SHEET 2 OF 2

Texas Department of Transportation — Design Division Standard

REPAIR OF CONCRETE PAVEMENT

REPCP-14

FILE: repcp14.dgn	DN: TxDOT	DN: HC	DW: HC	CK: AN
© TxDOT: DECEMBER 2014	CONT	SECT	JOB	HIGHWAY
REVISIONS				
	DIST	COUNTY		SHEET NO.

DATE:
FILE:

PCO #005 R

D. Wilson Construction
PO Box 3455
McAllen, Texas 78502
Phone: (956) 686-9573

Project: 24-235 - Pharr FY16 DAP - Agricultural Lab, Dock Expansion I & II
9901 S Cage Blvd
Pharr, Texas 78577

Prime Contract Potential Change Order #005 R: RFI 26 Existing.Electrical to TDOT Canopy

TO:	City Of Pharr PO Box 1729 Pharr, Texas 78577	**FROM:**	D Wilson Construction Company PO Box 3455 McAllen, Texas 78502
PCO NUMBER/REVISION:	005 R / 1	**CONTRACT:**	24-235 - City of Pharr Dock Expansion
REQUEST RECEIVED FROM:	Leo Vela **(D & F Industries, Inc.)**	**CREATED BY:**	Pilar Anzaldua-Garza **(D Wilson Construction Company)**
STATUS:	Pending - In Review	**CREATED DATE:**	3/13/2025
REFERENCE:	RFI 26	**PRIME CONTRACT CHANGE ORDER:**	None
EXECUTED:	No	**SIGNED CHANGE ORDER RECEIVED DATE:**	
SCHEDULE IMPACT:	19 days	**TOTAL AMOUNT:**	$62,346.80

POTENTIAL CHANGE ORDER TITLE: RFI 26 Existing.Electrical to TDOT Canopy

CHANGE REASON: Existing Condition

POTENTIAL CHANGE ORDER DESCRIPTION: *(The Contract Is Changed As Follows)*
CE #010 - RFI 26: Existing Electrical to TxDOT Canopy
We gladly submit this cost proposal to remove and relocate existing electrical line (concrete encased) that was discovered on the GPR Survey which services the TxDOT Canopy.
As per the response to RFI 26 below:

1. The new section (shown as a blue line in the attached snapshot) of the existing concrete-encase two (2) 4” conduits electrical line shall have the same standard concrete-encase. Additionally, this new section shall comply with the ANSI Load rating for vehicular traffic (worse-case-scenario Tier rating).
2. Additional manholes shall be installed in such a way that between two manholes (new or existing) there are no more than two deflections in the power line path.
3. The existing electrical line #4/0AWG low voltage conductors shall be insulation tested once they are completely reinstalled and before reconnecting them on both ends. Compare insulation test results with recorded ones or follow and comply the NFPA 70E, NESC C2-2023 (IEEE) standards. The existing electrical line #4/0AWG low voltage conductors shall be replaced if the insulation test results are unsatisfactory.
4. Once the electrical line is rerouted, the existing electrical line and ductbank will remain in place, however, all non-used wires and conductors must be removed and handed over to the Owner, and conduit caps are to be furnished and installed on all non-used stub ups (ends)

ATTACHMENTS:

#	Budget Code	Description	Amount
1	001.16-100.S	RFI 26 - Provide and install conduit, conductors and miscellaneous fittings to reroute the existing conduits as stated in response to RFIf 26. Excludes concrete, rebar and backfilling. Refer to backup for breakdown.	$50,754.00
2	001.02-105.S	RFI 26 - Provide labor to install rebar and place concrete at new concrete encasement, backfill and compact areas.	$5,000.00
3	112.03-200.M	RFI 26 - Provide additional rebar (stirfups) for concrete encasement of rerouted electrical lines for TXDot Canopy.	$525.00
4	001.03-075.M	RFI 26 - Provide red dye for concrete encasement of rerouted electrical lines for TXDot Canopy. - 5 Buckets	$250.00

PCO #005 R

#	Budget Code	Description	Amount
5	001.03-070.M	RFI 26 - Provide additional 17 CY concrete mix for concrete encasement of new conduit. 17 CY	$2,261.00
		Subtotal:	**$58,790.00**
		DWC Fee (5.00% Includes Cost Type (20)):	$2,939.50
		Bond (1.00% Applies to All Line Items):	$617.30
		Grand Total:	**$62,346.80**

Brownstone Consultants, LLC
P.O. Box 3898
McAllen, Texas 78505

04/25/2025
SIGNATURE **DATE**

City Of Pharr
PO Box 1729
Pharr, Texas 78577

Maria Luisa Rangel
SIGNATURE 05/05/2025 **DATE**

D Wilson Construction Company
PO Box 3455
McAllen, Texas 78502

SIGNATURE **DATE**

PCO #005

D. Wilson Construction
PO Box 3455
McAllen, Texas 78502
Phone: (956) 686-9573

Project: 24-235 - Pharr FY16 DAP - Agricultural Lab, Dock Expansion I & II
9901 S Cage Blvd
Pharr, Texas 78577

DRAFT

Prime Contract Potential Change Order #005: RFI 26 Existing.Electrical to TDOT Canopy

TO:	City Of Pharr PO Box 1729 Pharr, Texas 78577	**FROM:**	D Wilson Construction Company PO Box 3455 McAllen, Texas 78502
PCO NUMBER/REVISION:	005 / 0	**CONTRACT:**	24-235 - City of Pharr Dock Expansion
REQUEST RECEIVED FROM:	Leo Vela **(D & F Industries, Inc.)**	**CREATED BY:**	Pilar Anzaldua-Garza **(D Wilson Construction Company)**
STATUS:	Draft	**CREATED DATE:**	3/13/2025
REFERENCE:	RFI 26	**PRIME CONTRACT CHANGE ORDER:**	None
EXECUTED:	No	**SIGNED CHANGE ORDER RECEIVED DATE:**	
SCHEDULE IMPACT:	19 days	**TOTAL AMOUNT:**	$69,610.20

POTENTIAL CHANGE ORDER TITLE: RFI 26 Existing.Electrical to TDOT Canopy

CHANGE REASON: Existing Condition

POTENTIAL CHANGE ORDER DESCRIPTION: *(The Contract Is Changed As Follows)*
CE #010 - RFI 26: Existing Electrical to TxDOT Canopy
We gladly submit this cost proposal to remove and relocate existing electrical line (concrete encased) that was discovered on the GPR Survey which services the TxDOT Canopy.
As per the response to RFI 26 below:

1. The new section (shown as a blue line in the attached snapshot) of the existing concrete-encase two (2) 4" conduits electrical line shall have the same standard concrete-encase. Additionally, this new section shall comply with the ANSI Load rating for vehicular traffic (worse-case-scenario Tier rating).
2. Additional manholes shall be installed in such a way that between two manholes (new or existing) there are no more than two deflections in the power line path.
3. The existing electrical line #4/0AWG low voltage conductors shall be insulation tested once they are completely reinstalled and before reconnecting them on both ends. Compare insulation test results with recorded ones or follow and comply the NFPA 70E, NESC C2-2023 (IEEE) standards. The existing electrical line #4/0AWG low voltage conductors shall be replaced if the insulation test results are unsatisfactory.
4. Once the electrical line is rerouted, the existing electrical line and ductbank will remain in place, however, all non-used wires and conductors must be removed and handed over to the Owner, and conduit caps are to be furnished and installed on all non-used stub ups (ends)

ATTACHMENTS:

#	Budget Code	Description	Amount
1	001.16-100.S	RFI 26 - Provide and install conduit, conductors and miscellaneous fittings to reroute the existing conduits as stated in response to RFIf 26. Excludes concrete, rebar and backfilling. Refer to backup for breakdown.	$50,754.00
2	001.02-105.S	RFI 26 - Provide labor to install rebar and place concrete at new concrete encasement, backfill and compact areas.	$5,000.00
3	112.03-200.M	RFI 26 - Provide additional rebar (stirfups) for concrete encasement of rerouted electrical lines for TXDot Canopy.	$525.00
4	001.03-075.M	RFI 26 - Provide red dye for concrete encasement of rerouted electrical lines for TXDot Canopy. - 5 Buckets	$250.00

PCO #005

#	Budget Code	Description	Amount
5	001.03-070.M	RFI 26 - Provide additional 17 CY concrete mix for concrete encasement of new conduit. 17 CY	$2,261.00
		Subtotal:	**$58,790.00**
		Overhead (10.00% Applies to All Line Items):	$5,879.00
		DWC Fee (5.00% Includes Cost Type (20)):	$3,233.45
		Insurance (1.50% Applies to All Line Items):	$1,018.54
		Bond (1.00% Applies to All Line Items):	$689.21
		Grand Total:	**$69,610.20**

Brownstone Consultants, LLC
P.O. Box 3898
McAllen, Texas 78505

SIGNATURE **DATE**

City Of Pharr
PO Box 1729
Pharr, Texas 78577

SIGNATURE **DATE**

D Wilson Construction Company
PO Box 3455
McAllen, Texas 78502

SIGNATURE **DATE**

D. WILSON CONSTRUCTION CO.

PROJECT : **24-235 Pharr FY16 DAP Ag Bldg, Cold Storage & Dock Expansion**

PCO 05 - RFI 26 Electrical to TxDot Canopy

DESCRIPTION	QUANTITY	UNIT	UNIT COST L	UNIT COST M	UNIT COST S	LABOR	MATERIAL	SUB
						-	-	-
RFI 26 Electrical Ductbank						-	-	-
03-200 200 LF - reinforcing stirrups	1	LS		525		-	525	-
Rodbusters, Tie Wire	1	LS			$ 1,500	-	-	1,500
						-	-	-
						-	-	-
Red Dye	5	LS		50		-	250	-
						-	-	-
						-	-	-
Concrete Mix						-	-	-
03-070 200 LF 18"X18"=400 CF/27 =16.6 CY	17			133		-	2,261	-
						-	-	-
Site Work						-	-	-
Backfilling & Compaction	1	LS			$ 3,500	-	-	3,500
						-	-	-
						-	-	-
						-	-	-
ELECTRICAL (refer to D&F Proposal)						-	-	-
Materials	1	LS			$ 17,962	-	-	17,962
Labor Hours	1	Ls			$ 21,454	-	-	21,454
Mis Materials & Fuel	1	LS			$ 2,034	-	-	2,034
Supeintendent & PM	1	LS			$ 2,621	-	-	2,621
Overhead for Labor & Materials	1	ls			$ 6,683	-	-	6,683
						-	-	-
						-	-	-
						-	-	-
						-	-	-
						-	-	-
						-	-	-
						-	-	-
						-	-	-
						-	-	-
						-	-	-
						-	-	-
						-	-	-
						-	-	-
						-	-	-
						-	-	-
						-	-	-
						-	-	-
SUBTOTALS						-	3,036	55,754

TOTAL **58,790**

Sheet No. 1 **Item:** **RFI 26 Electrical to TxDot Canopy**

D & F Industries, Inc
P.O Box 1680 3106 N. Sugar Road
Pharr Texas 78577
(PH) 956-781-2496

ADDITIONAL WORK QUOTE

Project Name: 24-235 Pharr FY16 DAP Agricultural Lab & Dock Expansion
Submitted By: Leonel Vela
Issued To: D. Wilson Construction

Reference #: RFI 26 Response
Date: 17 February 2025
Required By: 10 March 2025

Details of Work

Provide and install conduit, conductors and miscellaneous fittings to reroute the existing conduits as stated in the RFI No. 26 response. The concrete, rebar, and backfilling will be by others.

Exclusions

The value of this quotation is based on labour, material, Trade contractor or Subcontractor work as listed herein only. The quotation is based on regular working hours unless noted otherwise. This quotation does not include for delay, disruptions, re-scheduling, acceleration and/or impact cost nor for the cumulative effect of changes.

Schedule Impacts: Yes **No. of Days of Impact:** 19 **Schedule Impact Cost:** $50754.00

Quote Validity: 15 Day(s)

Cost Breakdown

Subtotal		**$0.00**
Contractor Allowance - Own Forces	**%**	**$0.00**
Contractor Allowance - Subcontractors	**%**	**$0.00**
Schedule Impact Cost		**$50,754.00**
Total		**$50,754.00**

Pharr FY16 DAP - Agricultural Lab, Dock Expan I & II

COR 1291-1-0001

RFI 26 Response

Labor Rate	$	50.48
Overhead		10%
Markup		5%

Act No.	Take Off Items	Material	Labor Hrs	Labor Cost	Total Cost
	Material & Labor	$ 17,962	425	$ 21,454	$ 39,416
				$ -	$ -
				$ -	$ -
				$ -	$ -
				$ -	$ -
				$ -	$ -
				$ -	$ -
				$ -	$ -
				$ -	$ -
	Miscellaneous Material	$ 898	22	$ 1,111	$ 2,009
	Fuel	$ 25		$ -	$ 25
		$ 18,885	**447**	**$ 22,565**	**$ 41,450**

	Costs	Overhead	Markup	Totals
Material Total	$ 18,885	$ 1,889	$ 1,039	**$ 21,812**
Labor Total	$ 22,565	$ 2,256	$ 1,241	**$ 26,062**
Superintendent	$ 1,360	$ 136	$ 75	**$ 1,571**
Project Management	$ 915	$ 91	$ 50	**$ 1,057**
				$ 50,502
			Warranty	**$ 253**
				$ 50,754
			Bond	**$ -**
			Grand Total	**$ 50,754**

Total Labor Hours	447
Total Mandays	56
Average Crew Size	3
Estimated Crew Days	18.6

Pharr Bridge

Material		Qty		Material Cost	per	Extended		Labor Manhours	per	Extended
4" PVC		200		$ 10.15	e	$ 2,030.00		0.13	e	26.00
4" FIP		16		$ 5.08	e	$ 81.28		0.33	e	5.28
4" GRC 90		8		$ 148.30	e	$ 1,186.40		2.70	e	21.60
4" base spacers		80		$ 1.23	e	$ 98.40		0.06	e	4.80
trench ductbank		200		$ 2.75	e	$ 550.00		0.26	e	52.00
4" LB		2		$ 409.13	e	$ 818.26		8.58	e	17.16
4" x 12" GRC nipple		4		$ 53.29	e	$ 213.16		0.43	e	1.72
4" myers hub		6		$ 146.05	e	$ 876.30		1.23	e	7.38
36" x 36" x 30" N3R box		1		$ 1,148.47	e	$ 1,148.47		6.00	e	6.00
4/0 THHN		1440		$ 7.10	e	$ 10,224.00		0.07	e	100.80
#6 THHN		480		$ 1.07	e	$ 513.60		0.02	e	9.60
IPLD 250-4		3		$ 55.59	e	$ 166.77		1.25	e	3.75
IPLD 3/0-4		1		$ 55.59	e	$ 55.59		1.25	e	1.25
Remove existing 4/0		2190			e	$ -		0.07	e	153.30
Remove existing #6		730			e	$ -		0.02	e	14.60
					e	$ -			e	0.00
					e	$ -			e	0.00
					e	$ -			e	0.00
					e	$ -			e	0.00
					e	$ -			e	0.00
						$ -			e	0.00
					e	$ -			e	0.00
					e	$ -			e	0.00
					e	$ -			e	0.00
					e	$ -			e	0.00
					e	$ -			e	0.00
					e	$ -			e	0.00
					e	$ -			e	0.00
					e	$ -			e	0.00
					e	$ -			e	0.00
					e	$ -			e	0.00
					e	$ -			e	0.00
					e	$ -			e	0.00
					e	$ -			e	0.00
					e	$ -			e	0.00
					e	$ -			e	0.00
					e	$ -			e	0.00
					e	$ -			e	0.00
					e	$ -			e	0.00
					e	$ -			e	0.00
					e	$ -			e	0.00
					e	$ -			e	0.00
					e	$ -			e	0.00
					e	$ -			e	0.00
					e	$ -			e	0.00
					e	$ -			e	0.00
Total						$ 17,962.23				425.24

5000 West Military,
Ste 100 McAllen,
Texas 78503 (956) 664-0286
Fax (956) 664-0282

Request for Information

To:	Brownstone Consultants.	**Date:**	01/30/2025	
From:	Miguel Pineda	**AVO:**	57325.002	**RFI No:** #26
Email:	mpineda@halff.com	**Project:**	Pharr FY16 DAP – Agricultural Lab, Dock Expansion I & II	

Subject: Existing Electrical to TxDOT Canopy

☐Letter Dated: ☒Email Dated: 01/29/2025

☐Phone call Dated: ☐Fax Dated:

This confirms and records a request for information. Unless notified in writing within three days of the date noted above, it is agreed that a response generated from the request shall be provided to this office within five days.

Request:

Question

There was an existing electrical line (concrete encased) that was discovered on the GPR survey. Some exploration was
performed and it was discovered that there are (2) 4" conduits. These conduits start at the existing MDP and terminate on (2)
mini-power zone. The mini-power zones serve the existing TxDOT canopy. Please have the A/E/O team review this installation. For your reference, attached is a snapshot of the area with some exploratory notes. Also shown on the snapshot
is a suggested rerouting of the conduits. Please advise how to proceed

Response: **Exceptions as Noted.**

1. The new section (shown as a blue line in the attached snapshot) of the existing concrete-encase two (2) 4" conduits electrical line shall have the same standard concrete-encase. Additionally, this new section shall comply with the ANSI Load rating for vehicular traffic (worse-case-scenario Tier rating).
2. Additional manholes shall be installed in such a way that between two manholes (new or existing) there are no more than two deflections in the power line path.
3. The existing electrical line #4/0AWG low voltage conductors shall be insulation tested once they are completely reinstalled and before reconnecting them on both ends. Compare insulation test results with recorded ones or follow and comply the NFPA 70E, NESC C2-2023 (IEEE) standards. The existing electrical line #4/0AWG low voltage conductors shall be replaced if the insulation test results are unsatisfactory.

Note: If you found this response as a misinterpretation of the proposed electrical line rerouting path, please resubmit the RFI.

Outlook

Re: Pharr DAP 16 - RFI #26 (Existing Electrical to TxDOT)

From Sabrina Alvarez <Sabrina@bstone.biz>
Date Mon 2/3/2025 8:30 AM
To Shukan Bhakta <shukanb@dwilsonconstruction.com>
Cc Roberto Villela <robertov@dwilsonconstruction.com>; William Northcutt <williamn@dwilsonconstruction.com>; Vanessa J. Garza <vanessag@dwilsonconstruction.com>; David Chacon <david@bstone.biz>; Rolando Ayala <rolando@bstone.biz>; pharr_fy16_dap_lpoe-eqmabpblyt4j56j@corr.acc.autodesk.com <pharr_fy16_dap_lpoe-eqmabpblyt4j56j@corr.acc.autodesk.com>; Edwin Manrique <edwin.manrique@pharr-tx.gov>; Maria Rangel <maria.rangel@pharr-tx.gov>; Claudio Velasco <claudiov@dwilsonconstruction.com>; Pilar Anzaldua-Garza <pilara@dwilsonconstruction.com>; Emiliano Larios <Emilianol@dwilsonconstruction.com>

Caution:

This email originated from outside of D Wilson Construction Do not click links or open attachments unless you recognize the sender s email address and not just the name and know the content is safe

Hi Shukan,

I confirmed with the Electrical Engineer, and has stated that once the electrical line is rerouted, the existing electrical line and ductbank will remain in place (abandon in place); however, all non-used wires and conductors must be removed and handed over to the Owner, and conduit caps are to be furnished and installed on all non-used stub-ups (ends).

Please let me know if you need any further clarification.

Thanks,

Sabrina Alvarez
Project Control Specialist, Brownstone Consultants
956.307.3057

On Thu, Jan 30, 2025 at 2:19 PM Shukan Bhakta <shukanb@dwilsonconstruction.com> wrote:

> Sabrina,
>
> Can you clarify the following with engineer: once the electrical line is rerouted, are we to demo the existing electrical line and ductbank or abandon in place? This line is currently below the footprint of new building improvements.

Thanks,

SHUKAN BHAKTA
Assistant Project Manager
Procore Administrator

Office: (956) 686-9573
Direct: (956) 800-6538
Cell: (956) 460-1120
Email: shukanb@dwilsonconstruction.com
Web: www.dwilsonconstruction.com
Address: P.O. Box 3455, McAllen, TX 78502-3455
1207 E. Pecan, McAllen, Texas 78502

D. WILSON CONSTRUCTION CO.
An Employee-Owned Company

From: Sabrina Alvarez <Sabrina@bstone.biz>
Sent: Thursday, January 30, 2025 1:54 PM
To: Roberto Villela <robertov@dwilsonconstruction.com>; Shukan Bhakta <shukanb@dwilsonconstruction.com>; William Northcutt <williamn@dwilsonconstruction.com>; Vanessa J. Garza <vanessag@dwilsonconstruction.com>
Cc: David Chacon <david@bstone.biz>; Rolando Ayala <rolando@bstone.biz>; pharr_fy16_dap_lpoe-eqmabpblyt4j56j@corr.acc.autodesk.com <pharr_fy16_dap_lpoe-eqmabpblyt4j56j@corr.acc.autodesk.com>; Edwin Manrique <edwin.manrique@pharr-tx.gov>; Maria Rangel <maria.rangel@pharr-tx.gov>
Subject: Pharr DAP 16 - RFI #26 (Existing Electrical to TxDOT)

Caution:

This email originated from outside of D. Wilson Construction. Do not click links or open attachments unless you recognize the sender's email address and not just the name and know the content is safe.

Good afternoon,

Attached is the response to RFI #26. Please let us know if you need any further information.

Best regards,

Sabrina Alvarez
Project Control Specialist, Brownstone Consultants

956.307.3057 [illegible]

5000 West Military,
Ste 100 McAllen,
Texas 78503 (956) 664-0286
Fax (956) 664-0282

Answer by: Miguel Pineda

Copies: ☐ File ☐Owner ☐ Arch ☒ Other: General Contractor

Attachments: RFI#26 Existing Electrical to TxDOT Canopy.

RFI detail

#26 Existing Electrical to TxDOT Canopy

Status	**Open** In Review
Created on	Jan 29, 2025 by **Rolando Ayala**
RFI type	Default RFI workflow
Ball in court	**Rolando Ayala**
Due date	Feb 12, 2025

Question

There was an existing electrical line (concrete encased) that was discovered on the GPR survey. Some exploration was
performed and it was discovered that there are (2) 4" conduits. These conduits start at the existing MDP and terminate on (2)
mini-power zone. The mini-power zones serve the existing TxDOT canopy. Please have the A/E/O team review this installation. For your reference, attached is a snapshot of the area with some exploratory notes. Also shown on the snapshot
is a suggested rerouting of the conduits. Please advise how to proceed

Impact

Cost impact	-
Schedule impact	-

Other attributes

Priority	Normal
Discipline	-
Category	-
Location	-
Location details	-

External id	-
Co-reviewer(s)	**Sabrina Alvarez** (Brownstone Consultants)

Activities	By	At
Rolando Ayala created this RFI in **Open** In Review status and set Ball in court to **Rolando Ayala**.	**Rolando Ayala**	Jan 29, 2025, 10:15 AM CST

D. Wilson Construction
PO Box 3455
McAllen, Texas 78502
P: (956) 686-9573
F: (956) 686-3270

Project: 24-235 Pharr FY16 DAP - Agricultural Lab, Dock Expansion I & II
9901 S Cage Blvd
Pharr, Texas 78577

RFI #26: Existing Electrical to TxDOT Canopy

Status	Open		
To	Sabrina Alvarez (Brownstone Consultants, LLC) Rolando Ayala (Brownstone Consultants, LLC) David Chacon (Brownstone Consultants, LLC)	**From**	Shukan Bhakta (D Wilson Construction Company) PO Box 3455 McAllen, Texas 78502
Date Initiated	Jan 28, 2025	**Due Date**	Feb 4, 2025
Location		**Project Stage**	
Cost Impact	Yes (Unknown)	**Schedule Impact**	TBD
Spec Section		**Cost Code**	
Drawing Number		**Reference**	
Linked Drawings			
Received From	Leo Vela (D & F Industries, Inc.)	**Sub Job**	
Copies To	Pilar Anzaldua-Garza (D Wilson Construction Company), Vanessa Garza (D Wilson Construction Company), Emiliano Larios (D Wilson Construction Company), Sabas Lopez (D Wilson Construction Company), Claudio Velasco (D Wilson Construction Company), Roberto Villela (D Wilson Construction Company)		

Activity

Question

Question from Shukan Bhakta D Wilson Construction Company *on Tuesday, Jan 28, 2025 at 05:31 PM CST*

There was an existing electrical line (concrete encased) that was discovered on the GPR survey. Some exploration was performed and it was discovered that there are (2) 4" conduits. These conduits start at the existing MDP and terminate on (2) mini-power zone. The mini-power zones serve the existing TxDOT canopy. Please have the A/E/O team review this installation. For your reference, attached is a snapshot of the area with some exploratory notes. Also shown on the snapshot is a suggested rerouting of the conduits. Please advise how to proceed.

Attachments
existing-electrical-rfi-2.pdf

Awaiting an Official Response

D & F Industries, Inc
P.O Box 1680 3106 N. Sugar Road
Pharr Texas 78577
(PH) 956-781-2496

REQUEST FOR INFORMATION

Project Name: Pharr Bridge Dock
Initiated By: Leonel Vela
Issued To: Shukan Bhakta

Reference #: 2
Date: 28 January 2025
Required By: **30 January 2025**

Subject

Existing Electrical

Details

There was a line that was discovered on the GPR survey. Some exploration was performed and it was discovered that there are (2) 4" conduits. These conduits start at the existing MDP and terminate on (2) mini-power zone. The mini-power zones serve the existing canopy. Please have the A/E/O team review this installation. For your reference, attached is a snapshot of the area with some exploratory notes. Also shown on the snapshot is a suggested rerouting of the conduits.

Relevant / Reference Contract Documents

Response:

- 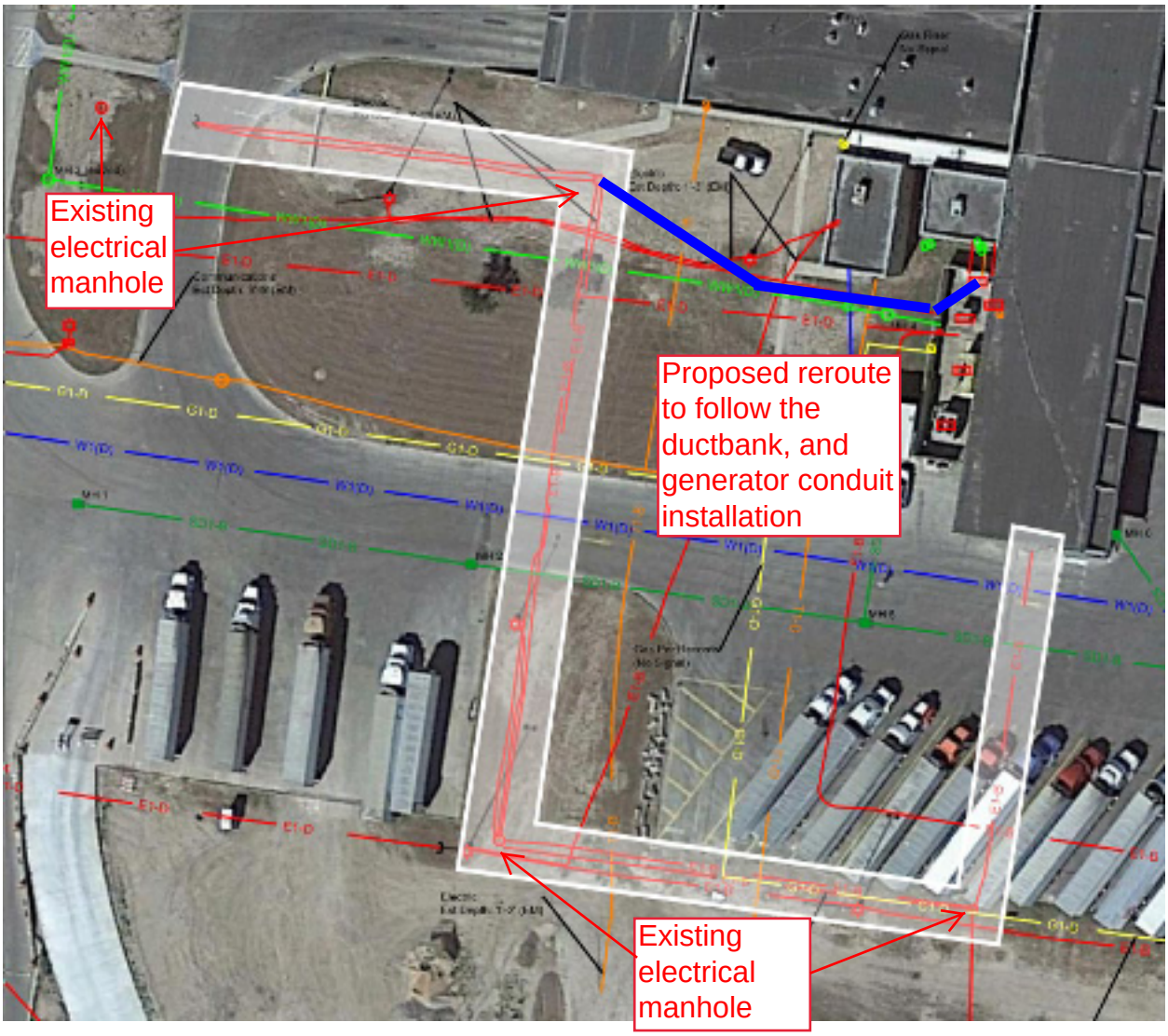

- The conduits found are (2) 4” with (3) 4/0 phase conductors and a ground conductor
- The conductors terminate at the existing MDP
- The conductors serve two mini power zones located by the existing canopy (not shown on this snapshot)

PCO #006 R

D. Wilson Construction
PO Box 3455
McAllen, Texas 78502
Phone: (956) 686-9573

Project: 24-235 - Pharr FY16 DAP-Agricultural Lab, Dock Expansion I & II
9901 S Cage Blvd
Pharr, Texas 78577

DRAFT

Prime Contract Potential Change Order #006 R: Change basis of design RTUs 2 & 3

TO:	City Of Pharr PO Box 1729 Pharr, Texas 78577	**FROM:**	D Wilson Construction Company PO Box 3455 McAllen, Texas 78502
PCO NUMBER/REVISION:	006 R / 1	**CONTRACT:**	24-235 - City of Pharr Dock Expansion
REQUEST RECEIVED FROM:	Buster Smith **(D & F Industries, Inc.)**	**CREATED BY:**	Pilar Anzaldua-Garza **(D Wilson Construction Company)**
STATUS:	Draft	**CREATED DATE:**	6/5/2025
REFERENCE:	RTUs	**PRIME CONTRACT CHANGE ORDER:**	None
EXECUTED:	No	**SIGNED CHANGE ORDER RECEIVED DATE:**	
SCHEDULE IMPACT:		**TOTAL AMOUNT:**	($18,512.00)

POTENTIAL CHANGE ORDER TITLE: Change basis of design RTUs 2 & 3

CHANGE REASON: Design Development

POTENTIAL CHANGE ORDER DESCRIPTION: *(The Contract Is Changed As Follows)*

CE #015 - Change basis of design HVAC RTUs 2 & 3 to meet Buy America requirements

REV 6/6/2025 Change from basis of design Daikin RTU DOAS 2 & 3 (BAA Non-Compliant) to Captive Aire RTU-2&3 to include coil and cabinet coatings.

Submittal and substitution request are currently in review (see attachment)

Quote Valid for 8 days

ATTACHMENTS:

#	Budget Code	Description	Amount
1	112.15-500.S	Change RTUs 2 & 3 basis of design to Captive Aire Units - BAA Compliant, Applied Climate Solutions $83,500 + $4750 = $88,250.00	$88,250.00
2	112.15-500.S	Credit for basis of design Daikin DOAS RTU 2&3	$(107,386.00)
3	112.15-500.S	Mechanical PM Cost	$624.00
		Grand Total:	**$(18,512.00)**

Brownstone Consultants, LLC
P.O. Box 3898
McAllen, Texas 78505

SIGNATURE **DATE**

City Of Pharr
PO Box 1729
Pharr, Texas 78577

6-30-2025

SIGNATURE **DATE**

D Wilson Construction Company
PO Box 3455
McAllen, Texas 78502

SIGNATURE **DATE**

D & F Industries, Inc
P.O Box 1680 3106 N. Sugar Road
Pharr Texas 78577
(PH) 956-781-2496

ADDITIONAL WORK QUOTE

Project Name: 24-235 Pharr FY16 DAP Agricultural Lab & Dock Expansion (HVAC)
Submitted By: Buster Smith
Issued To: D. Wilson Construction

Reference #: M-602A
Date: 26 May 2025
Required By: 16 June 2025

Details of Work

Change basis of design Daikin RTU DOAS-2&3 (BAA Non-Compliant) to CaptiveAir RTU-2&3 to include coil and cabinet coatings

Exclusions

The value of this quotation is based on labour, material, Trade contractor or Subcontractor work as listed herein only. The quotation is based on regular working hours unless noted otherwise. This quotation does not include for delay, disruptions, re-scheduling, acceleration and/or impact cost nor for the cumulative effect of changes.

Schedule Impacts: TBD **No. of Days of Impact:** TBD **Schedule Impact Cost:** $TBD

Quote Validity: 15 Day(s)

Cost Breakdown

Labor	QTY	Rate	Total
Mechanical Project Manager	8.00	78.00	$624.00
		Labor Subtotal:	$624.00

Suppliers	QTY	Rate	Total
Applied Climate Solutions	1.00	83500.00	$83,500.00
Applied Climate Solutions	1.00	4750.00	$4,750.00
Daikin Applied c/o Perry Mechanical	-1.00	107386.00	$-107,386.00
		Suppliers Subtotal:	$-19,136.00

Subtotal		**$-18,512.00**
Contractor Allowance - Own Forces	**0.00%**	**$0.00**
Contractor Allowance - Subcontractors	**10.00%**	**$0.00**

Schedule Impact Cost	**$0.00**
Total	**$-18,512.00**

24-235 - Pharr FY16 DAP-Agricultural Lab, Dock Expansion I & II

9901 S Cage Blvd
Pharr, Texas 78577
United States

D. Wilson Construction
PO Box 3455
McAllen, Texas 78502
United States
(956) 686-9573

Title
23 74 13A Packaged, Outdoor, Air-Handling (Roof-Top) Units - Product Data

Submittal Manager
Roberto Villela

Spec Section
23 74 13A - Packaged, Outdoor, Air-Handling (Roof-Top) Units

Type
Product Data

Number
23 74 13A-1

Rev
1

Description
A. Product Data: Include manufacturer's technical data for each RTU, including rated capacities, dimensions, required clearances, characteristics, furnished specialties, and accessories.

DOAS 01 - Resubmitted with BAA Criteria
DOAS 2 & 3 Alternate mfg to meet BAA

D&J INDUSTRIES, INC.
P.O BOX 1680 3106 N. SUGAR ROAD
PHARR TEXAS 78577

TRANSMITTAL

COMPANY:
D. WILSON CONSTRUCTION

DATE:
16 MAY 2025

ATTENTION:
CLAUDIO VELASCO

PROJECT:
24-235 PHARR FY16 DAP AGRICULTURAL LAB & DOCK EXPANSION (HVAC)

PROJECT NUMBER:
1288-2

CONTRACT NUMBER:
N/A

SUBMITTAL NUMBER:
237413-2

SUBMITTAL DESCRIPTION:
DOAS UNITS

PREPARED BY:
BUSTER SMITH

ADDITIONAL FILES ATTACHED:
PRODUCT DATA;

COMMENTS:
PLEASE FORWARD FOR REVIEW AND ENGINEER'S RESPONSE. INCLUDES DOAS-2 & 3 SUBSTITUTION REQUEST.

ACTION REQUIRED:
FOR REVIEW

THIS REVIEW IS FOR GENERAL CONFORMANCE WITH THE DESIGN CONCEPT/INTENT AND FOR GENERAL ARRANGEMENT ONLY AND SHALL NOT RELIEVE THE CONSTRUCTOR / DESIGNER OF THEIR RESPONSIBILITY FOR DETAILED DESIGN OR FOR ERRORS OR OMISSIONS IN THE SHOP DRAWINGS. THE DESIGNER IS RESPONSIBLE FOR CONFIRMATION, COORDINATION AND CORRELATION OF THE PRODUCT BEING SUBMITTED WITH THE ENTIRE DESIGN REQUIREMENT AND THEIR TEAM. THE CONSTRUCTOR IS RESPONSIBLE FOR COORDINATING THIS SUBMISSION WITH OTHER PARTIES FOR INTEGRATING INTO THEIR SCOPE OF WORK.

BUSTER SMITH
REVIEWED BY

16 MAY 2025
DATE REVIEWED

- ☐ **APPROVED**
- ☐ **DISAPPROVED**
- ☐ **APPROVED AS NOTED**
- ☐ **APPROVED AS NOTED RESUBMIT**
- ☑ **REVIEWED**
- ☐ **NOT REVIEWED**
- ☐ **REVIEWED AS NOTED**

COMMENTS:

GOVERNMENT USE ONLY

- ☐ **APPROVED**
- ☐ **DISAPPROVED**
- ☐ **APPROVED AS NOTED**
- ☐ **APPROVED AS NOTED RESUBMIT**
- ☐ **NOT REVIEWED**

COMMENTS:

REVIEWED BY

2025-05-16
DATE REVIEWED

5449 Bear Lane, Suite 314
Corpus Christi, TX 78405
Phone: 361-854-7768
Fax: 361-854-7782

PERRY MECHANICAL SYSTEMS

3133 W. Alberta Rd.
Edinburg, TX 78539
Phone: 956-227-0799
Fax: 956-386-1255

REVISED Submittal Data

Date: 5/16/25
Project: TXDOT Pharr FY 16 Dock Expansion
Contractor: D&F Industries
Engineer: Halff Associates

We are pleased to submit the following for: **Record:** **Approval:** **x**

<u>Daikin Model DPS Packaged Roof Top Unit, Tag: RTU-DOAS-1</u>
(1) Daikin Rebel Packaged Rooftop Units, complete with the following:

-R-32 refrigerant factory charged
-Constant Air Volume Single Zone
-DX Cooling
-460/3ph
-Modulating Hot Gas Reheat
-100% OA hood
-Double wall construction with 1" foam (15-tons and less) or 2" foam (16-tons and up) insulation
-Painted exterior with 3,000 hr ASTM B117 salt spray rating
-Angled condenser coil for hail protection with vandal guard
-Condenser, evaporator and HGRH coil electrofin coating
-Non-fused disconnect
-Field powered GFI
-Phase failure monitor
-Unit Mounted MicroTech controller with BACnet card
-DX evaporator coil with SS coil casing and SS drain pan
-Direct drive plenum supply fan
-(1) set disposable filters pre-filters provided with unit, extra sets and MERV 13 filters can be purchased as required.
-Factory Startup
-modulating gas heat
-14" flat, wind rated roof curb
-10,000 hr cabinet coatings on DOAS units
-5 year entire unit parts and labor warranty

<u>CLARIFICATIONS/EXCLUSIONS</u>

-The R-410a units scheduled are no longer available, so new R-32 units have been submitted. Performance, weights and electrical characteristics will vary from basis of design.

May 16, 2025

RE: Project: TX DOT Pharr – Dock Expansion
Products: Rebel® Model Nos.: DPSC31B

To Whom It May Concern:

Daikin Applied Americas Inc. ("Daikin Applied") certifies that the above referenced Product furnished or to be furnished for the Project complies with and is in accordance with the Build America, Buy America Act, which was signed into law as part of the Infrastructure Investment and Jobs Act ("IIJA") (Public Law 117-58) on November 15, 2021, and are in compliance with 0MB M-24-02. Specifically, the subject Product is manufactured in the United States and the cost of components that are mined/produced/manufactured in the United States will be greater than 55% of the total cost.

We appreciate the opportunity to work with you on this project.

Sincerely,

Reuben Flesner
Applications Engineering Manager, Packaged Rooftops & Self-Contained Systems

Daikin Applied Americas Inc.
World Headquarters
13600 Industrial Park Boulevard
Minneapolis, MN 55441
763-553-5330

Table of Contents

Technical Data Sheet - RTU-DOAS-1 4

Rebel Drawings - RTU-DOAS-1 8

Fan Curve - Supply - RTU-DOAS-1 11

Job Information	Technical Data Sheet
Job Name	TXDOT Pharr - Dock Expansion
Date	5/16/2025
Submitted By	Jason King
Software Version	13.51
Unit Tag	RTU-DOAS-1

Unit Overview

Model Number	Voltage V/Hz/Phase	Design Cooling Capacity Btu/hr	ISMRE Per AHRI Standard 920	
			ISMRE2	ISMRE2-70
DPSC31B	460/60/3	295148	7.6	7.8

Unit

Model Number:	DPSC31B
Model Type:	Cooling
Heat Type:	Gas
Hot Gas Reheat:	MHGRH
Energy Recovery:	None
Application:	Constant Volume (100% OA; VAV capable SAF)
Controls:	Microtech
Outside Air:	100% Outside Air
Altitude:	0 ft
Approval	cETLus

Physical

Dimensions and Weight			
Length	Height	Width	Weight
202.5 in	72.1 in	76.5 in	4082 lb

Corner Weights			
L1	L2	L3	L4
999 lb	1041 lb	1042 lb	1000 lb

Construction			
Exterior	Insulation and Liners	Air Opening Location	
		Return	Supply
Painted Galvanized Steel	2" Injected Foam, R13, Galvanized Steel Liner	None	Bottom

Electrical

Unit FLA	MCA	MROPD	SCCR
60.2 A	66.4 A	90 A	10 kAIC

Note:	Use only copper supply wires with ampacity based on 75° C conductor rating. Connections to terminals must be made with copper lugs and copper wire.

Return/Outside/Exhaust Air

Outside Air Option		
Type	Damper Pressure Drop	Exhaust Air Type
None	0.03 inH_2O	None

Filter Section

Physical				
Type	Quantity / Size	Face Area	Face Velocity	Air Pressure Drop
COMBO RACK - 2" MERV8 filters from factory & blank 4" rack	9 / 18 in x 24 in x 2 in	27.0 ft²	111.1 ft/min	0.04

DX Cooling Coil

Physical								
Coil Type	Refrigerant Type	Fins per Inch	Rows	Face Area	Face Velocity	Air Pressure drop	Drain Pan Material	UV Light
Cu Tube/ Al Fin	R32	14	4	22.4 ft²	133.9 ft/min	0.07 inH_2O	Stainless Steel	None

Cooling Performance								
Capacity			Indoor Air Temperature					Ambient air Temperature °F
			Entering		Leaving			
Total Btu/hr	Sensible Btu/hr	Moisture Removal lb/h	Dry Bulb °F	Wet Bulb °F	Dry Bulb °F	Wet Bulb °F	Dewpoint °F	
295148	156116	124.8	101.0	80.0	48.5	48.5	48.5	105.0

Condensate Connection Size:	3/4 in. Male NPT

Hot Gas Reheat Coil Section

Type	Face Area	Air Pressure Drop	Total Capacity	Leaving Air Temperature	
				Dry Bulb	Wet Bulb
Aluminum Tube Micro-Channel	21.6 ft²	0.03 inH_2O	69981 Btu/hr	70.0 °F	57.2 °F

Fan Section

Fan		
Type	Fan Wheel Diameter	Fan Isolation
SWSI AF	16 in	Spring Isolation

Performance				
Airflow	Total Static Pressure	Fan Speed	Brake Horsepower	Altitude
3000 CFM	1.3 inH_2O	1945 rpm	1.17 HP	0 ft

Motor				Drive
Type	Horsepower	Efficiency	FLA	Type
Premium Eff Induction Motor	2.0	Premium	2.5 A	Direct Drive

Gas Heat Section

Physical

Airflow	Max Allowable Burner Temp Rise	Size	Connection (Qty) Size	Heat Exchanger Material
3000 CFM	100.0 °F	300 MBH	(2) 0.75 in. Female NPT	Stainless Steel - High Temperature Rise

Performance

Capacity Btu/hr	Air Temperature Dry Bulb		Air Pressure Drop inH_2O	Gas Pressure		Modulation
	Entering °F	Leaving °F		Minimum inH_2O	Maximum inH_2O	
243000	30.0	104.7	0.12	5	14	Modulating 12:1 Turndown

:	Two gas connections inside the unit. Single pipe enters unit and splits to two manifolds. Refer to IM 1125 for details on piping.

Unit Discharge Conditions

AirTemperature

Motor Heat Btu/hr	Moisture Removal lb/h	Unit Leaving Dry Bulb °F	Unit Leaving Wet Bulb °F	Unit Leaving Dewpoint °F
3488	124.8	49.6	48.9	48.5

Minimum Airflows

Notes:	Refer to fan curve for applicability of approximate airflows

Condensing Section

Compressor

Type	Quantity	Refrigerant Charge lb	Total Power	Capacity Control	Compressor Isolation
Inverter Scroll	2	35.5	29.69 kW	Mod Control with Inverter Compressor	Rubber in Shear

Compressor Amps:

Compressor 1	23.0 A
Compressor 2	25.0 A

Compressor Options:	Suction and Discharge Isolation Valves

Condenser Coil

Type	Fins per Inch	Fin Material
Microchannel	23	Aluminum

Coil Options:	ElectroFin Coated coil with Vandal Guard

Condenser Fan Motors

Number of Motors	Full Load Current (Total)
2	6.4 A

Internal Pressure Drop Calculation

External Static Pressure:	1.00 inH_2O
Filter:	0.04 inH_2O
Outside Air:	0.03 inH_2O
DX Coil:	0.07 inH_2O
Hot Gas Reheat:	0.03 inH_2O
Gas Heat:	0.12 inH_2O
Total Static Pressure:	1.28 inH_2O

Sound

	Sound Power (db)							
Frequency	**63 Hz**	**125 Hz**	**250 Hz**	**500 Hz**	**1 kHz**	**2 kHz**	**4 kHz**	**8 kHz**
Inlet	70	69	77	69	64	63	58	55
Discharge	76	75	80	75	73	70	65	60
Radiated	80	74	76	76	78	76	76	67

Options

Unit	
Coil Coatings:	All Coils Coated
Electrical	
Field Connection:	Single Disconnect
Powered Receptacle:	Field powered 115V GFI outlet
Power Options:	Phase Failure Monitor
Controls	
Communication Card:	BACnet IP

Factory Installed Sensors

Leaving Coil/Entering Fan Temperature Sensor
Discharge Air Temperature sensor – Wired in unit, mounted in supply duct
Outside Air Temperature Sensor
Dirty Filter On/Off Switch
Supply Fan Air Proving Via Modbus
Condensate Overflow Switch

Warranty

Parts:	Additional Four Year, Five Year Total
Compressor:	Additional Four Year, Five Year Total
Gas Heat Exchanger:	Extended Nine Year, Ten Year Total

Specials

Unit	
Specials Description:	

Notes

Unit is to be lifted with proper rigging practices outlined in IOM. Forklifting the unit is not allowed.

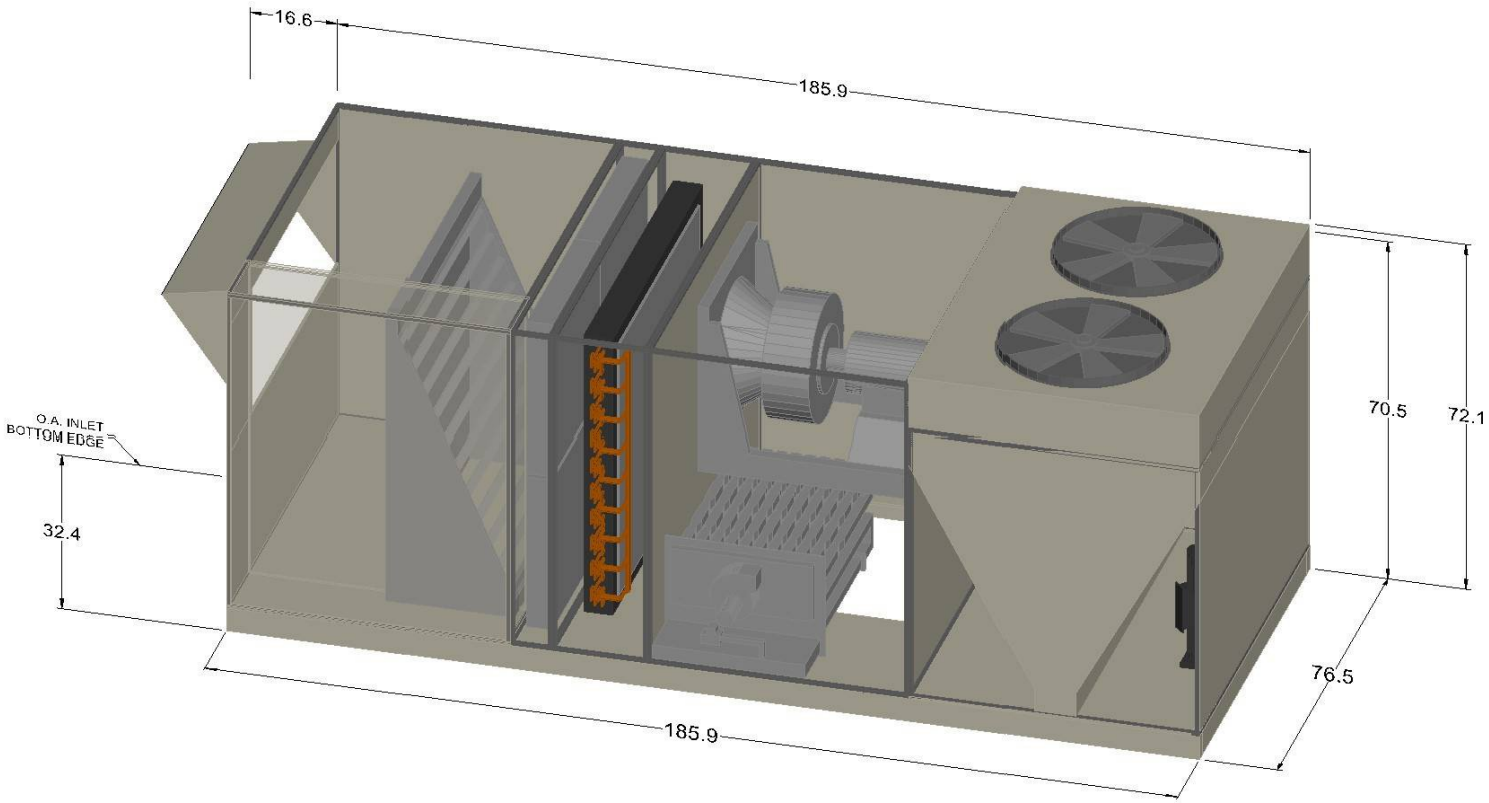

Notes:
(1) Recommended location for optional field cut side power connection.
(2) Horizontal gas connection only. Gas pipe routing within the roofcurb is not available.

	Unit Tag: RTU-DOAS-1			Sales Office: Perry Mechanical Systems			DAIKIN
Product: Rebel	Project Name: TXDOT Pharr - Dock Expansion			Sales Engineer:			13600 Industrial Park Blvd. Minneapolis, MN 55441
Model: DPSC31B	May 16, 2025	Ver/Rev:	Sheet: 1 of 1	Scale: NTS	Tolerance: +/- 0.25"	Dwg Units: in [mm]	www.DaikinApplied.com Software Version: 13.51

No change to this drawing may be made unless approved in writing by Daikin Applied. Purchaser must determine that the equipment is fit and sufficient for the job specifications.

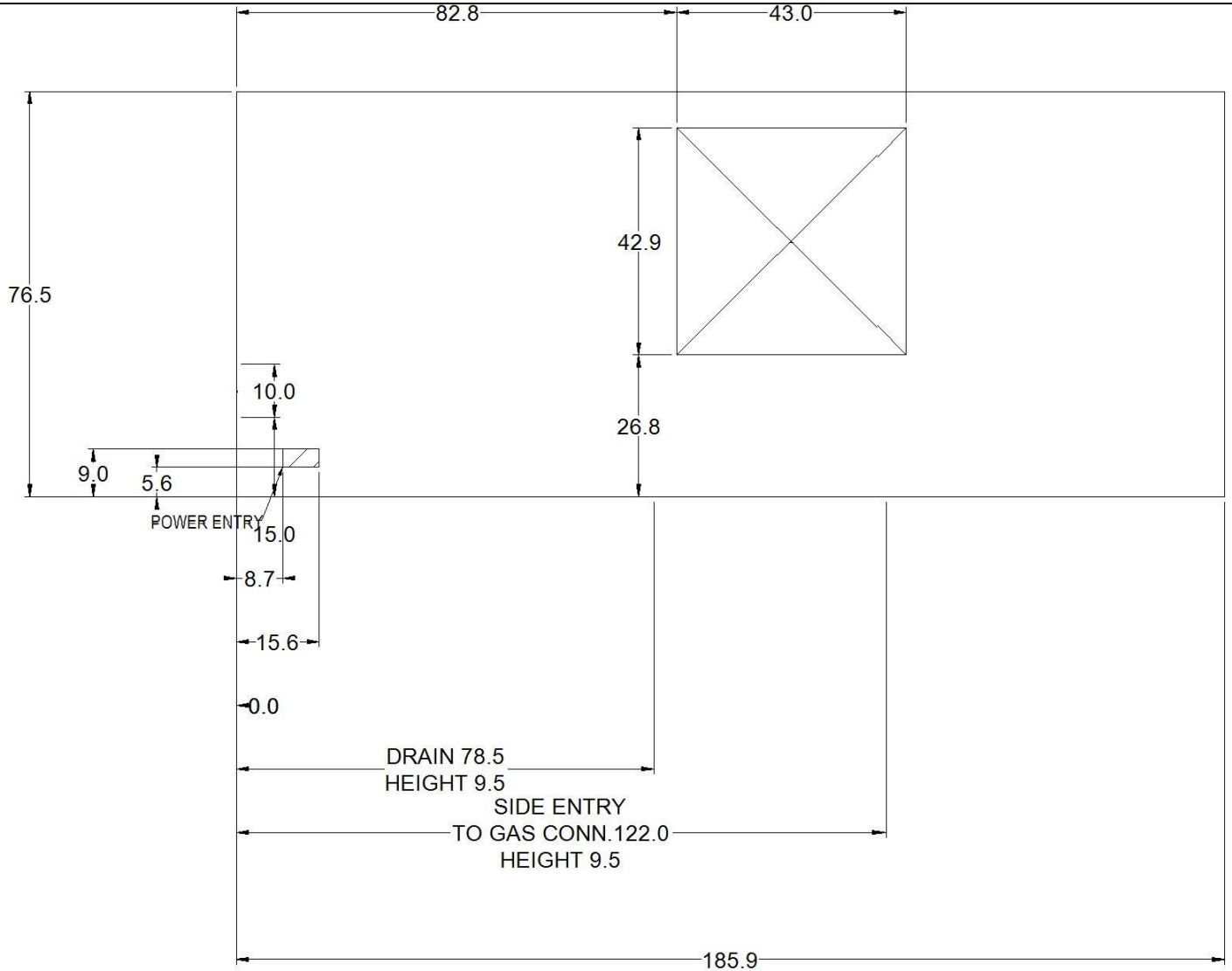

PLAN VIEW - OPENINGS & OVERALL

	Unit Tag: RTU-DOAS-1			Sales Office: Perry Mechanical Systems			DAIKIN
Product: Rebel	Project Name: TXDOT Pharr - Dock Expansion			Sales Engineer:			13600 Industrial Park Blvd. Minneapolis, MN 55441
Model: DPSC31B	May 16, 2025	Ver/Rev:	Sheet: 1 of 1	Scale: NTS	Tolerance: +/- 0.25"	Dwg Units: in [mm]	www.DaikinApplied.com Software Version: 13.51

No change to this drawing may be made unless approved in writing by Daikin Applied. Purchaser must determine that the equipment is fit and sufficient for the job specifications.

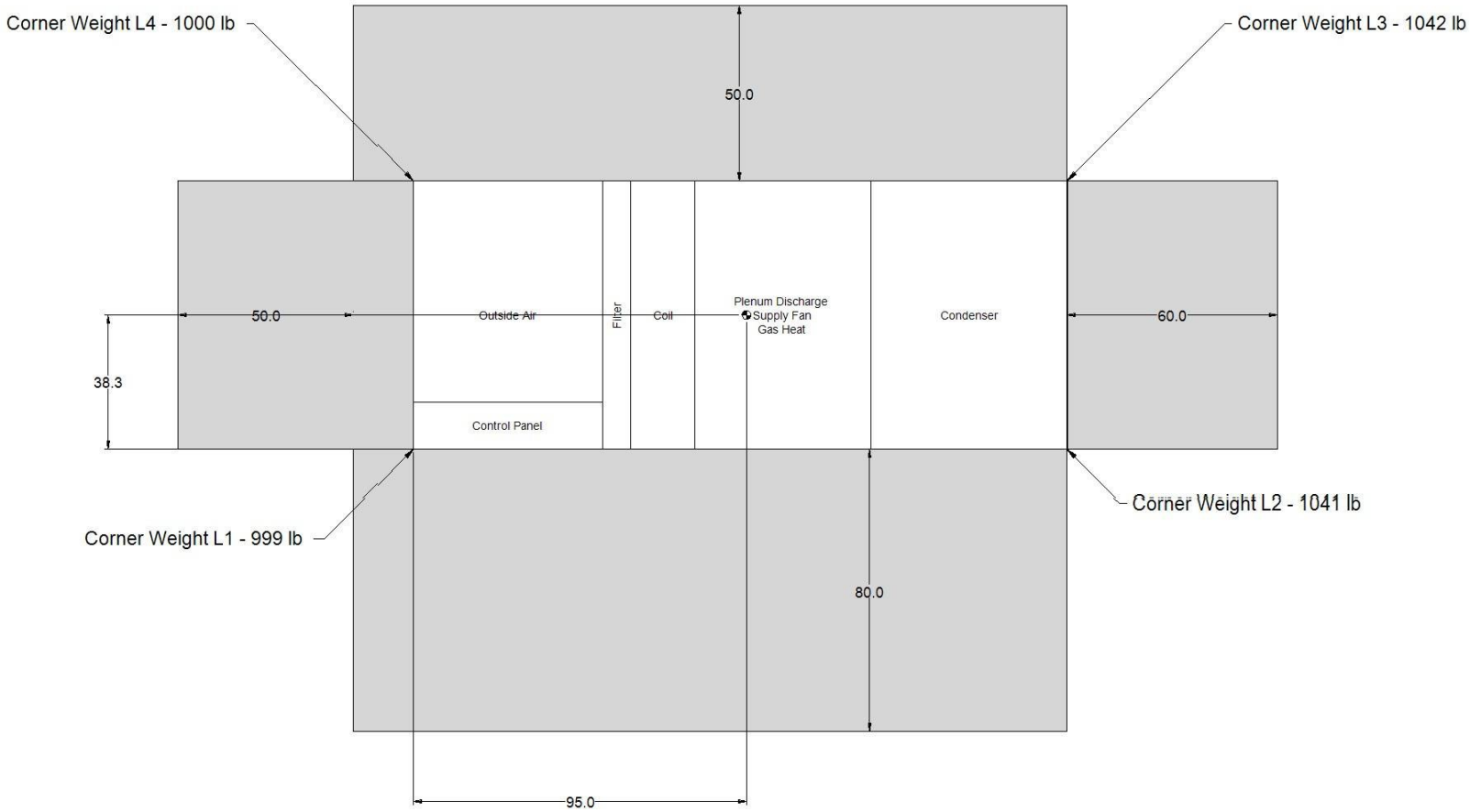

PLAN VIEW - CG, CORNER WEIGHTS, SERVICE CLEARANCE

Notes:
(1) Center of Gravity Height = 24.1
(2) Total Weight = 4082 lb

	Unit Tag: RTU-DOAS-1			Sales Office: Perry Mechanical Systems			DAIKIN
Product: Rebel	Project Name: TXDOT Pharr - Dock Expansion			Sales Engineer:			13600 Industrial Park Blvd. Minneapolis, MN 55441
Model: DPSC31B	May 16, 2025	Ver/Rev:	Sheet: 1 of 1	Scale: NTS	Tolerance: +/- 0.25"	Dwg Units: in [mm]	www.DaikinApplied.com Software Version: 13.51

No change to this drawing may be made unless approved in writing by Daikin Applied. Purchaser must determine that the equipment is fit and sufficient for the job specifications.

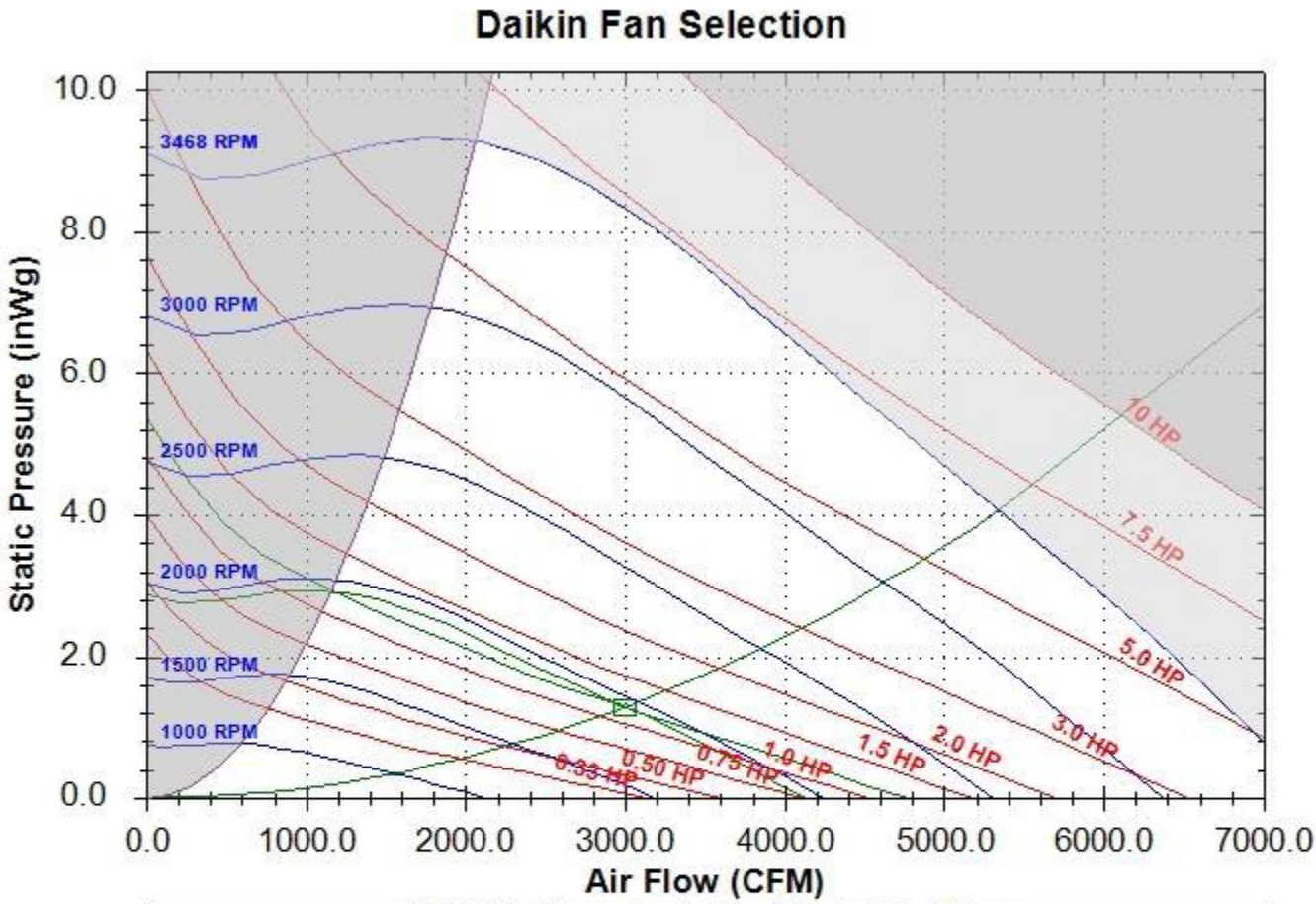

16.0 SWSI - Plenum Supply Fan at Standard Conditions								
Base Tag	RTU-DOAS-1				Date	May-16-2025		
Job Name	TXDOT Pharr - Dock Expansion				Time	1:27 PM		
Air Volume	3000	CFM			Fan Speed	1945	RPM	
Total Static	1.28	inWg			Max Speed	3468	RPM	
Brake Horsepower	1.17	HP			Efficiency	52	%	
Unit Sound Power	63hz	125hz	250hz	500hz	1000hz	2000hz	4000hz	8000hz
Inlet Sound Power	70	69	77	69	64	63	58	55
Outlet Sound Power	76	75	80	75	73	70	65	60
Radiated Sound Power	80	74	76	76	78	76	76	67

DAIKIN

SUBSTITUTION REQUEST
(After the Bidding/Negotiating Phase)

Project: PHARR FY16-DAP - IMPORT DOCK AND AG LAB IMPROVEMENTS

Substitution Request Number: _____

From: D&F Industries, Inc.

To: D.Wilson Construction Company

Date: 5/14/25

A/E Project Number: _____

Re: DOAS-2 & 3

Contract For: Mechanical

Specification Title: PACKAGED, OUTDOOR AHU (ROOF-TOP) UNITS

Description: DOAS-2 & 3

Section: 237413A Page: 1-13

Article/Paragraph: N/A

Proposed Substitution: Paragon DOAS RTU by CAPTIVEAIRE

Manufacturer: CAPTIVEAIRE Address: Muskogee, Oklahoma Phone: 469-317-2068

Trade Name: PARAGON Model No.: CAS-HVAC1-I.125-13-7.5T-DOAS

Installer: _____ Address: _____ Phone: _____

History: ☐ New product ☐ 1-4 years old ☐ 5-10 years old ☒ More than 10 years old

Differences between proposed substitution and specified product: Paragon units comply with BAA requirements

☐ Point-by-point comparative data attached — REQUIRED BY A/E

Reason for not providing specified item: _____

Similar Installation:

Project: _____ Architect: _____

Address: _____ Owner: _____

Date Installed: _____

Proposed substitution affects other parts of Work: ☑ No ☐ Yes; explain _____

Savings to Owner for accepting substitution: _____ ($ 0).

Proposed substitution changes Contract Time: ☑ No ☐ Yes [Add] [Deduct] _____days.

Supporting Data Attached: ☐ Drawings ☑ Product Data ☐ Samples ☐ Tests ☐ Reports ☐ _____

© Copyright 2013, CSI,
110 S. Union St., Suite 100, Alexandria, VA 22314

Form Version: September 2013
CSI Form 13.1A

Job Name: Pharr FY16 Import Dock & Ag Lab

Date: April 25, 2025 11:52 AM

CAS-HVAC1-I.125-13-7.5T-DOAS (#1) RTU-DOAS-2 Weight: 1353 lbs./83 curb

RTU with Indirect Fired Heat and 13" Direct Drive Plenum Fan, 1 Furnace, Electronic Full Modulation, Constant 81% Efficiency, and 6:1 Max Turndown for NG, (5:1 Max Turndown for LP). Stainless Steel Burner and Heat Exchanger.

SUPPLY MOTOR

Model GP1/54 • 1.500 HP, 3 Phs, 460 V, 60 Hz, 2.1 FLA, TEFC, Premium (E-Plus3) Eff.

SUPPLY PERFORMANCE

Supply Air:	890 CFM	RPM:	1445
Return Air:	0 CFM	Outdoor Air:	890 CFM
Tip Speed:	4918 ft/min	BHP:	0.5820
SP:	1.117" w.g. (1.000" Ductwork Discharge ESP + 0.117" Opt.)		
Altitude:	90 ft		

BLOWER

13 Inch Plenum Fan for size 1 RTU. Hub specified to match motor shaft.

TEMPERATURE CONTROL

WAREHOUSE • Occupied/Unoccupied Scheduling • Space Temp Control • Heating and Cooling Activation Based On Either Set Point • Manual/Auto Blower Mode • Smoke Detector Interlock • Freezestat • Space Sensor Ships Loose. Use with MUA.

AIRFLOW DIRECTION

- Down Discharge - Air Flow Left -> Right

CURB & SUPPORTS

- ROOF CURB - 41" Width, 71" Length, 14" Supply Height, Insulated.

HEATING SCHEDULE

Altitude:	90 ft
Output BTU:	93,135 BTU/Hr
Input BTU:	114,981 BTU/Hr
Based Off:	BTUs Actual Air Density
Gas Type:	Natural
HEAT PUMP	
Entering Temp:	40.0°F
Max Temp Rise:	46.0°F
Discharge Dry Bulb Temp:	86.0°F
COP:	3.5
GAS HEAT	
Winter Outdoor Air Dry Bulb Temp:	30.0°F
Temp Rise:	90.0°F
Discharge Dry Bulb Temp:	120.0°F

COOLING SCHEDULE

Outdoor Air Dry Bulb Temp:	101.0°F
Outdoor Air Wet Bulb Temp:	80.0°F
Max Outdoor Air %:	100%
Mixed Air Dry Bulb Temp:	101.0°F
Mixed Air Wet Bulb Temp:	80.0°F
Mixed Air Dew Point:	72.7°F
Leaving Dry Bulb Temp:	46.2°F
Leaving Wet Bulb Temp:	46.2°F
Leaving Dew Point:	46.3°F
Moisture Removal Rate:	39.3 Lb/Hr
Total Capacity:	98.9 MBH
Sensible Capacity:	52.9 MBH
Latent Capacity:	46.0 MBH
Reheat Coil Capacity:	60.0 MBH
Reheat Coil Leaving Dry Bulb Temp:	70.0°F
Reheat Coil Leaving Wet Bulb Temp:	56.5°F
Reheat Coil Leaving Relative Humidity:	43%
IEER:	18.6
ISMRE2:	7.3

SUPPLY INSTALLATION INFORMATION

Gas Pressure:	7 in. w.c. - 14 in. w.c.
Insurance Requirements:	No Insurance Requirement (ANSI)
Unit Voltage:	3 phs 460 V 60Hz
Unit Main Input:	16.1 Amps MCA • 20 Amps MOP • 460 V • 12 AWG Wire Min.
SCCR:	10 kAmp
A2L Min. Room Area / Airflow / Height:	235 ft2 • 423 CFM • 7.2 ft **

*** Minimum room area assumed 7.2' supply diffuser height and is calculated per UL60335-2-40 4th ed. Values based on factory charge. Actual site charge may differ.*

CONFIGURED OPTIONS

- Gas Pressure Gauge, 0-35", 2.5" Diameter, 1/4" Thread Size
- Gas Pressure Gauge, 0 to +10 Inches Wc., 2.5" Diameter, 1/8" Thread Size, Rear Thread
- Cooling Override
- Single Point Electrical Connection for RTU. QNTY 1 750va Transformer Used. If a Non-DCV Prewire controls this unit, the #28, #47, "MA", or "E2" Option Prewire must be selected. Do not provide supply starter in prewire.
- Unit will be shipped with construction mode ON. This is used to provide tempering for a building in construction. Activation is set to Intake, Tempering is set to Discharge, Mixing Box is set to 100% OA and HMI number is 1.
- RTU Blower Door Switch. Used to turn on DOOR INTERLOCK Schematic Layer. Does Not Include Door Switch.
- 2" Merv 13 Filters for Size 1 RTU. QTY 4, 16 x 16 x 2 Merv 13 Filters
- 2" Merv 8 Filters for Size 1 RTU. QTY 4, 16 x 16 x 2 Merv 8 Filters
- Overheat Stat factory set at 80°F and 10 minutes. Prevents unit from overheating the space when cooling.
- CFM monitoring for MUA units. Uses rivet nuts, 1/4" airflow tubing and push to connect fittings.
- VFD factory mounted and wired in unit control vestibule.
- RTU Size 1 Down Discharge
- 7.5 Ton Modulating Cooling Option with Heat Pump, 460/480V. R454B Refrigerant, Variable Speed Inverter Duty Compressor, ECM Condensing Fan(s).
- RTU Compressor Oil Sensor Factory Installed. M12 Style Connector.
- Low ambient cooling controls down to 0F ambient temperatures. To be used in recirculating applications.
- R454B Refrigerant Leak Detector Option. Includes 20% LFL sensor and harness.
- RTU Fixed 100% Outdoor Air Intake.
- Occupied Scheduling Defaulted for IBT/RTU.
- Intake Firestat. Set to 135°F
- Freezestat
- Discharge Firestat. Set to 240°F
- CASLink building monitoring system communications module. Requires internet & field wired ethernet connection or 3G cellular service. Includes Rev 3 Comm Module, RJ45 to modbus converter, 3 FT cat5 cable, and 1 FT of shielded twisted pair.
- 7.5 Ton Heat Pump Modulating Reheat Option for Space Control - R454B
- VAV (Variable-Air-Volume) Wiring Package for Commercial Fans. Manual Speed Control Variable Frequency Drive Included
- Supply Variable Frequency Drive - 1-1/2 HP Max., 400/480 V, Three Phase, 3.5/3.0 A Max., NEMA 1 Enclosure, with 2RJ-45 FOR MODBUS
- Mount Load Reactor in Fan.
- Remote MSTP BACnet monitoring
- RTU Size 1 Hail Guard for outdoor coil. Includes magnets and washers for installation.
- RTU Size 1 No Return
- Option for Metal Mesh Filters in RTU1 OA Intakes
- Remote Room Sensor Option. Wall Mountable 10k Temp and Humidity Room Sensor Included.
- GFCI 15 amp Convenience Outlet For RTU1 Enclosure. 120V power supply by others. Includes receptacle, jbox & cover.
- Clogged Filter Switch with Notification on HMI
- Size 1 RTU Curb Duct Hanger - Adjustable Duct Hanger Support Brackets installed for both return and discharge duct.

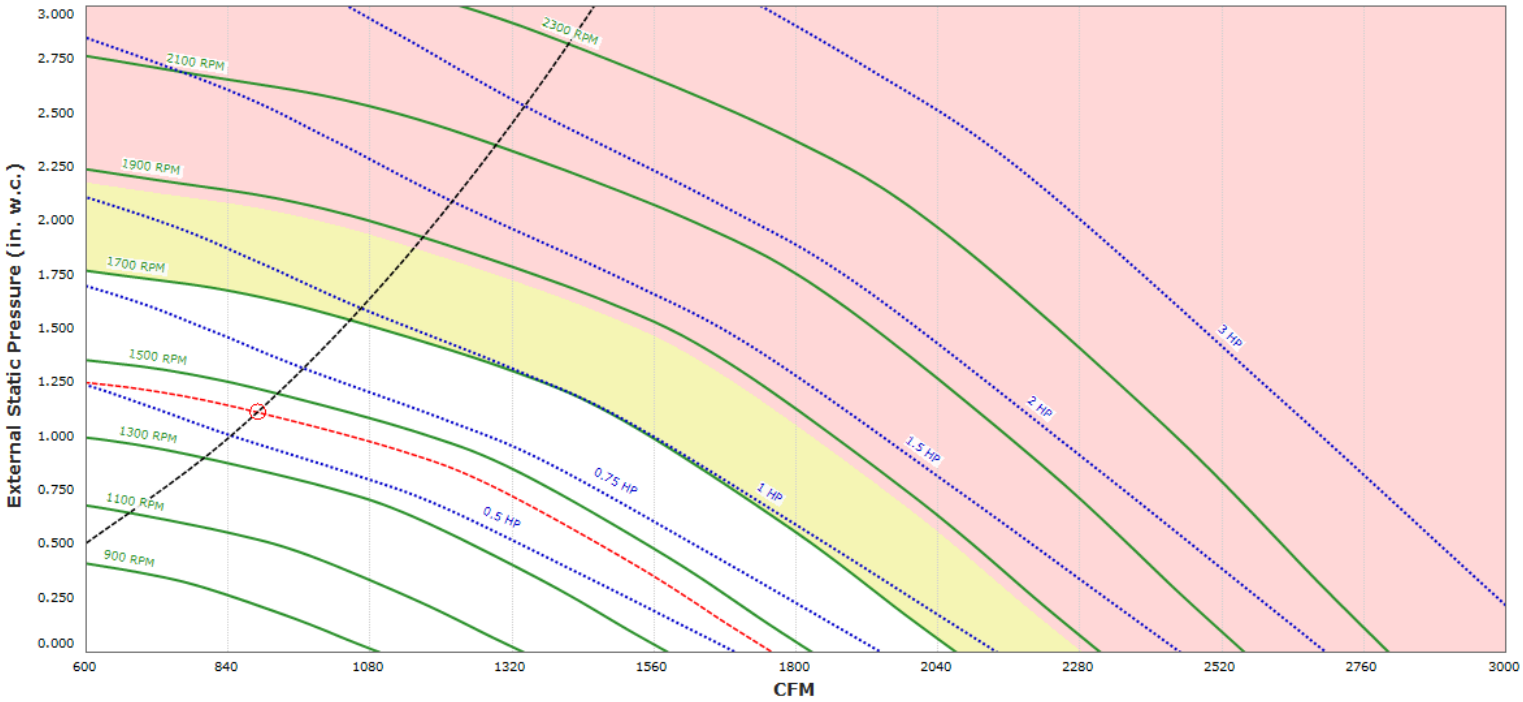

CAS-HVAC1-I.125-13-7.5T-DOAS SOUND (1445 RPM) AT 5 FT. IN OCTAVES:

1	2	3	4	5	6	7	8
81.8	81.6	78.1	75.4	75.7	72.2	69.6	71.6

LWA:	80.4	Sones:	19.5	DBA:	70.1

Note: Sound data across operational range. Tested in accordance to AHRI Standard 270/370.

FAN #1 CAS-HVAC1-1.125-13-7.5T-DOAS - HEATER (RTU-DOAS-2)

NOTES:
1. DO NOT OBSTRUCT OUTSIDE AIR INLET, OUTSIDE AIR COIL OR OUTSIDE AIR FAN.
2. ( ) DENOTES CORNER WEIGHT.
3. ROOF OPENING MUST BE 2" SMALLER THAN CURB DIMENSIONS IN BOTH DIRECTIONS.
4. CONNECTION FROM BREAKER TO UNITS SAFETY DISCONNECT SWITCH TO BE COPPER WIRE ONLY.
5. EXTERIOR GAS CONNECTION PROVIDED BY FACTORY WITH QUICK SEAL AND ANTI-ROTATION BRACKET.

*NOTE: INTEGRAL CO2 MONITORING AND CONTROL CAPABILITIES FOR ALL SPACE MOUNTED THERMOSTATS.

*NOTE: SUPPLY DUCT MUST BE INSTALLED TO MEET SMACNA STANDARDS. A MINIMUM STRAIGHT DUCT LENGTH MUST BE MAINTAINED DOWNSTREAM OF UNIT DISCHARGE AS OUTLINED IN AMCA PUBLICATION 201. WHEN USING RECTANGULAR DUCTWORK, ELBOWS MUST BE RADIUS THROAT, RADIUS BACK WITH TURNING VANES. FLEXIBLE DUCTWORK AND SQUARE THROAT/SQUARE BACK ELBOWS SHOULD NOT BE USED. ANY TRANSITION AND/OR TURNS IN THE DUCTWORK WILL CAUSE SYSTEM EFFECT. SYSTEM EFFECT WILL DRASTICALLY INCREASE STATIC PRESSURE AND REDUCE AIRFLOW. DO NOT RELY ON UNIT TO SUPPORT DUCT IN ANY WAY. FAILURE TO PROPERLY SIZE DUCTWORK MAY CAUSE SYSTEM EFFECTS AND REDUCE PERFORMANCE OF THE EQUIPMENT.
SUGGESTED STRAIGHT DUCT SIZE IS 20.75" x 21.5".

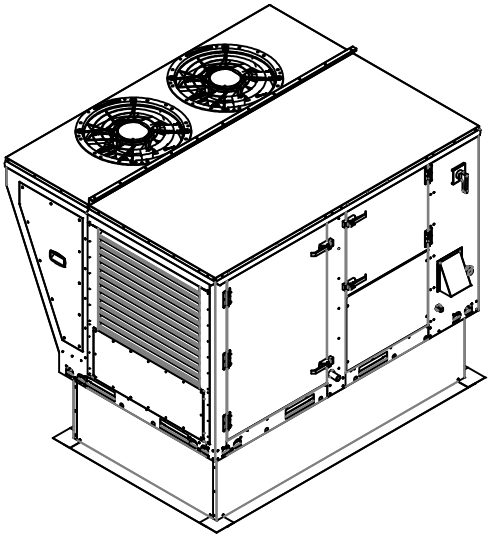

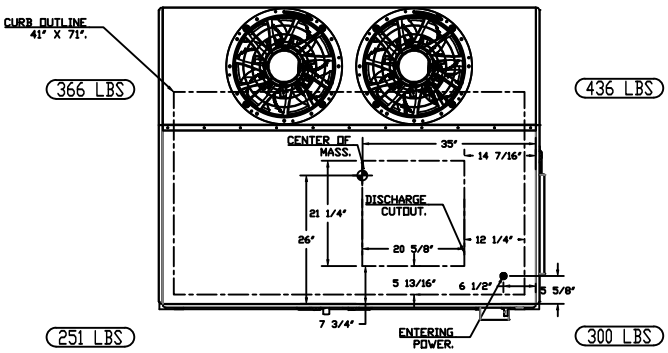

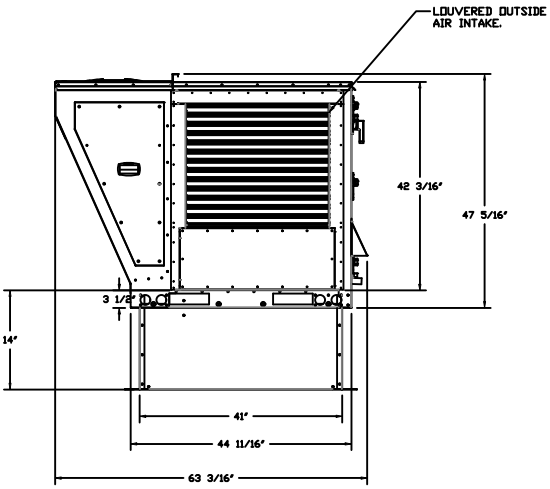

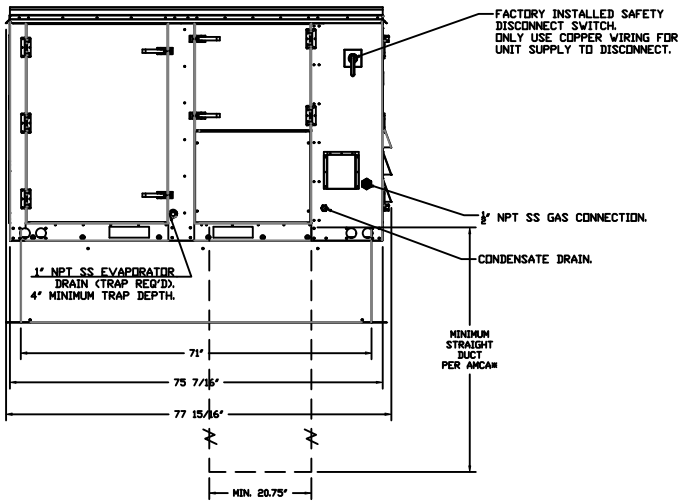

Fan #1 Curb
ROOF CURB - 41″ Width, 71″ Length, 14″ Supply Height, Insulated.

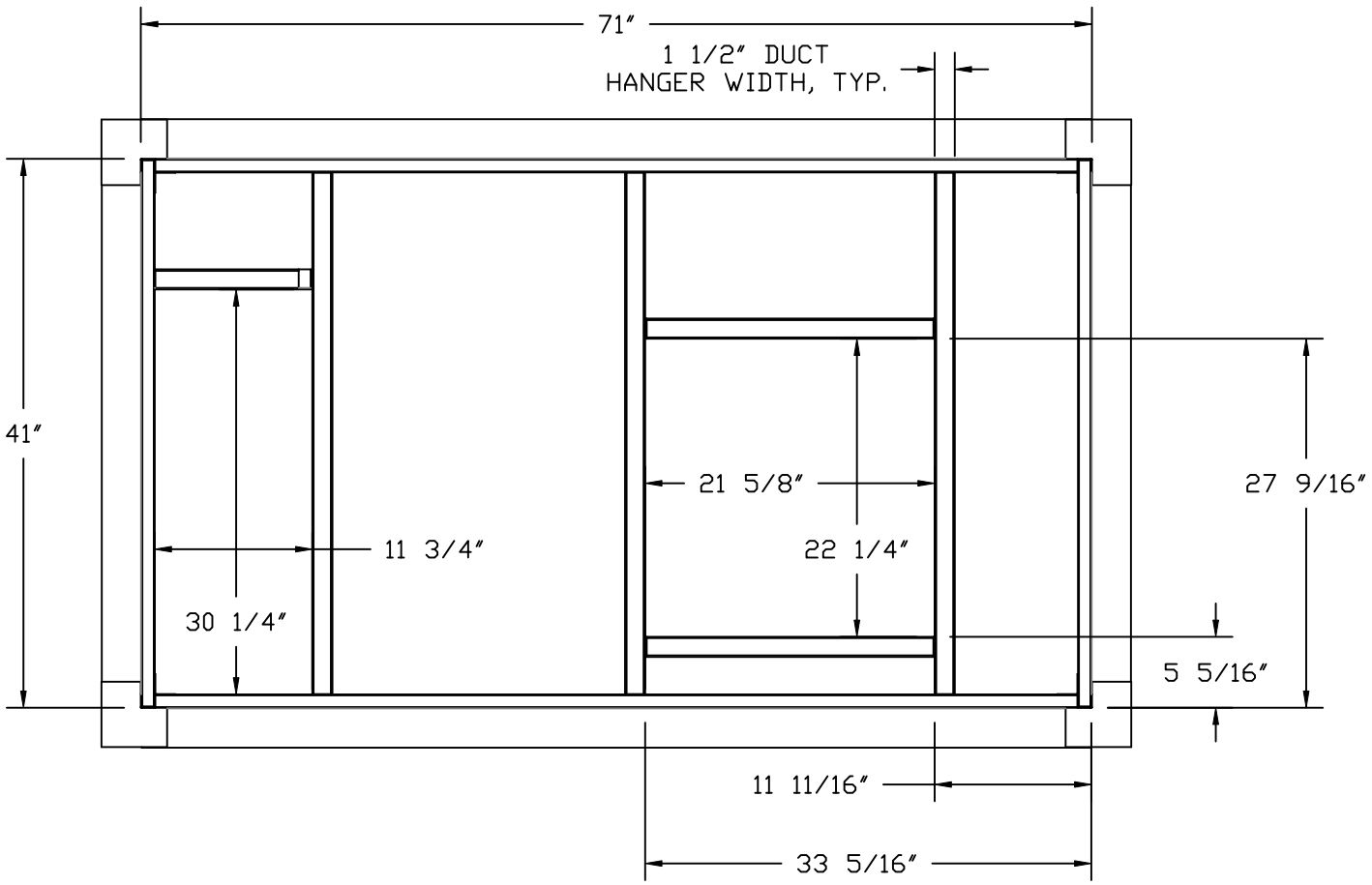

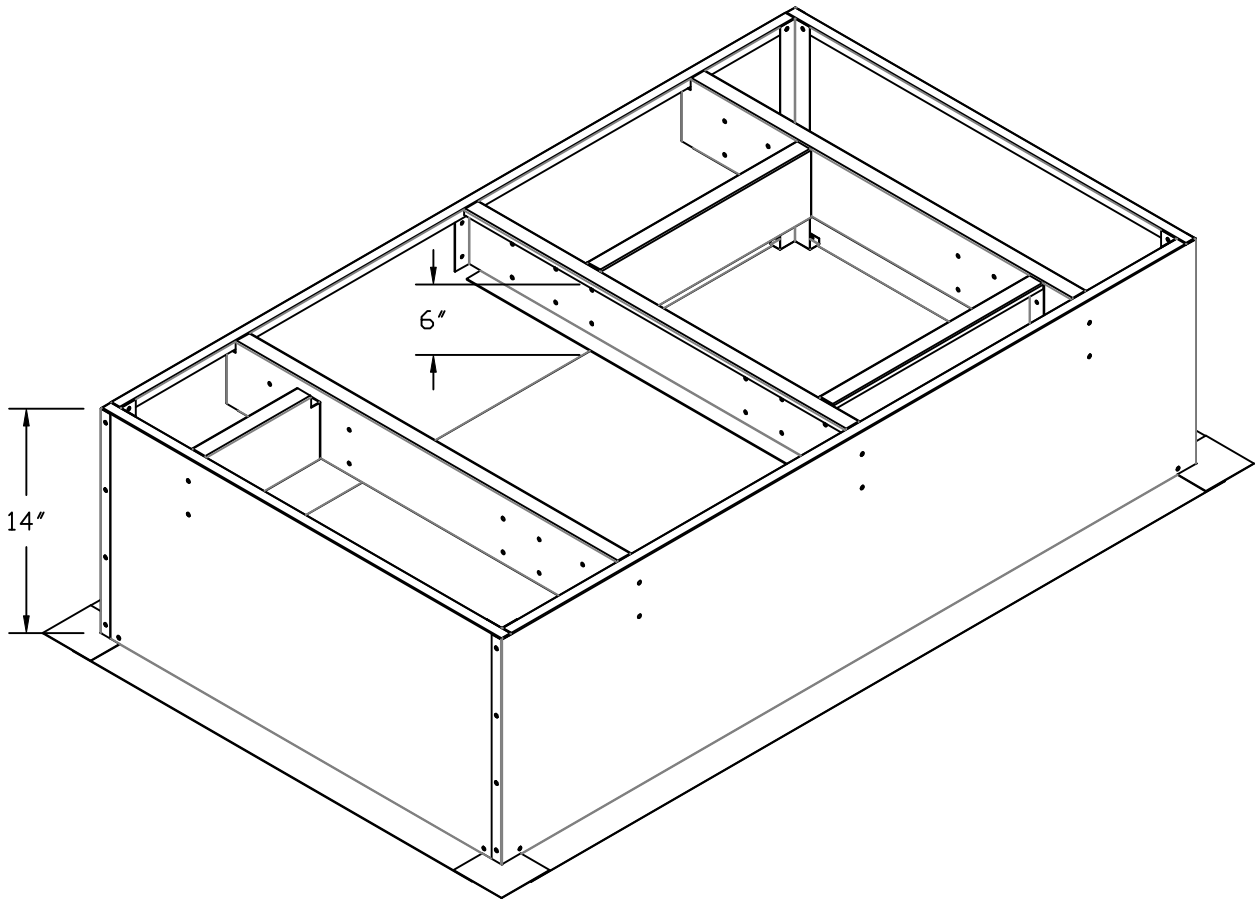

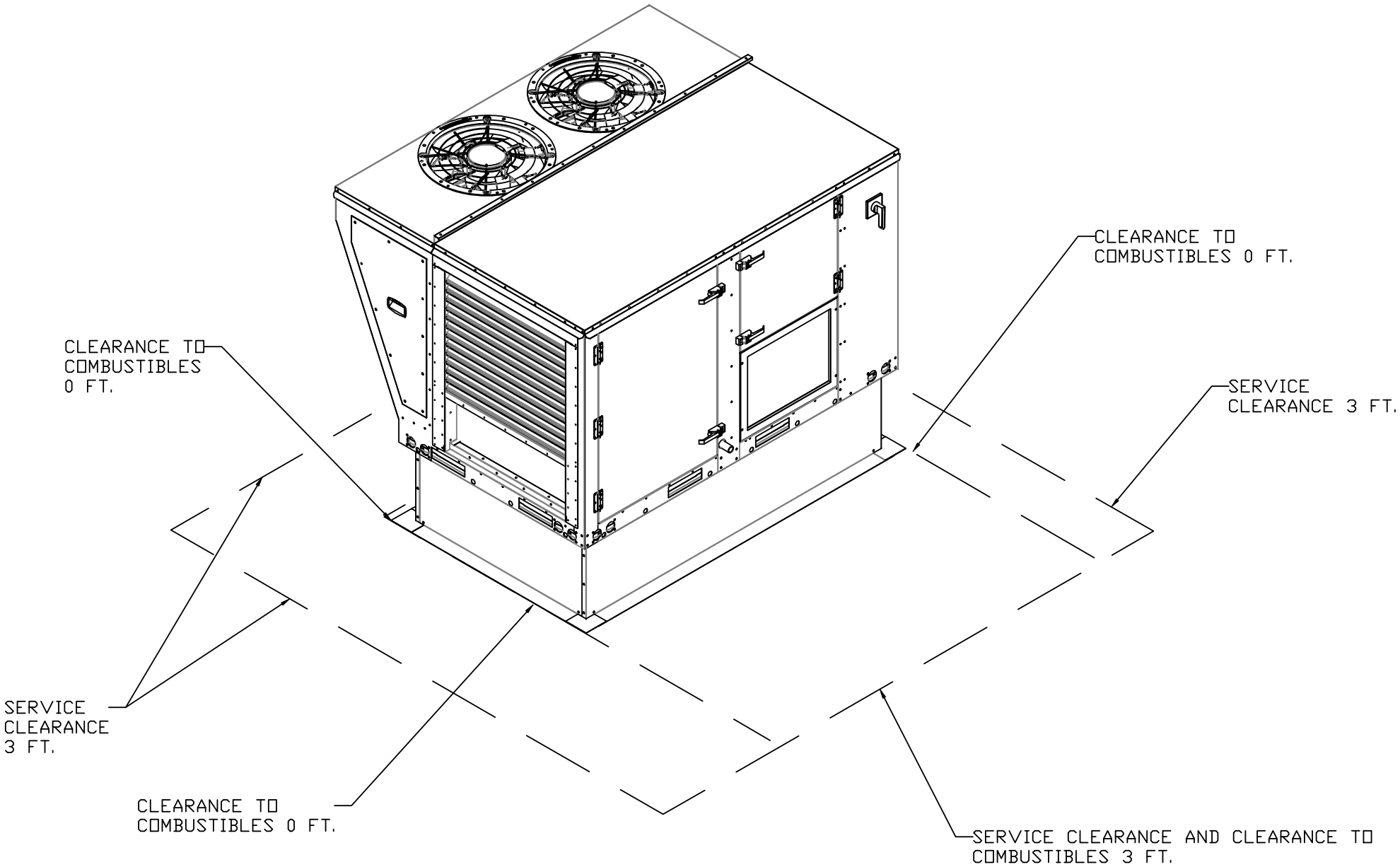

SIZE 1 - 2 CONDENSERS

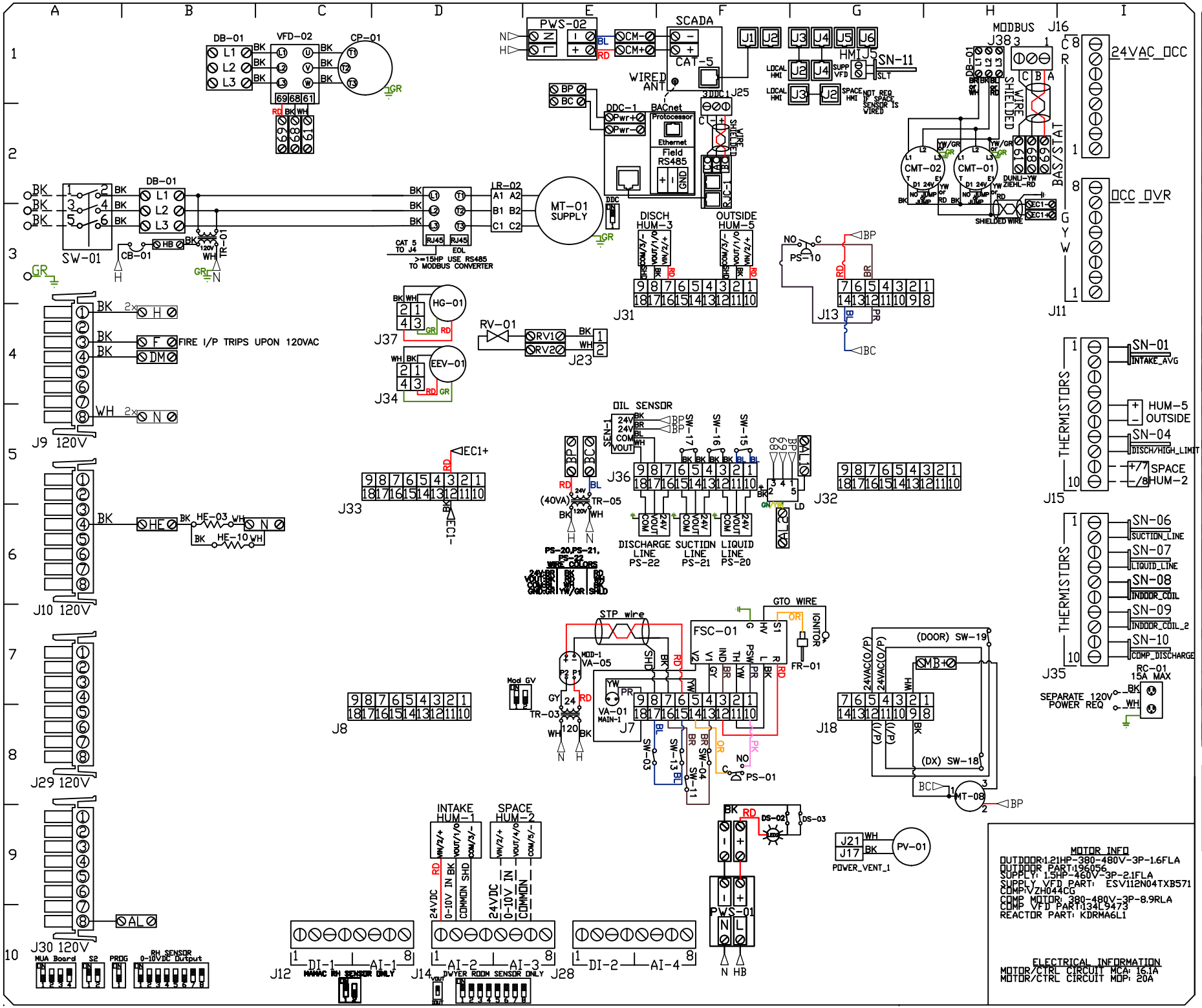

COMPONENT LIST

LABEL	DESCRIPTION	
CB-01	CIRCUIT_BREAKER	B3
SCADA	SCADA_COMM_MODULE	F1
CMT-XX	CONDENSING_MTR	G2
DB-01	DISTRIBUTION_BLOCK	B2
DS-XX	ELEC_DOOR_SWITCH	F9
EEV-01	ELEC_EXP_VALVE_1	D4
FR-01	FLAME_RDD	G7
FSC-01	FLAME_SAFETY_CTLR	C7
HE-03	CRANKCASE_HEATER	B6
HG-01	REHEAT_VALVE_1	D3
HE-10	ACCUMULATOR_HEATER	B6
HUM-XX	HUM/TEMP_SEN	F3/F9/E4/D9
LED-XX	CAB_LED_STRIP	F9
LR-XX	LINE/LOAD_REACTOR	D2
MT-01	SUPPLY_MOTOR	E3
LED-XX	CAB_LED_STRIP	F9
MT-08	MB_DAMPER_MTR	H8
PS-01	VENT_PROVING_1	F8
PS-10	CLGGD_FILTER_SWITCH	G3
PS-20	LIQUID_LINE_PRES	F6
PS-21	SUCTION_LINE_PRES	F6
PS-22	DISCHARGE_LINE_PRES	F6
PV-XX	FURNACE_POWER_VENT	G9/H10
RC-01	CONV_OUTLET	I8
RV-01	REVERSING_VALVE	E4
SEN-1	OIL_SENSOR	F5
SN-XX	TEMP_SENSOR	I4/I5/I6/I7
SW-01	DISCONNECT_SWITCH	A3/I8
SW-03	ROLL_OUT_1-1	F8
SW-04	FURN_HIGH_TEMP_1-1	F8
SW-11	FURN_HIGH_TEMP_1-2	F8
SW-13	ROLL_OUT_1-2	F8
SW-15	REFR_LOW_PRES_SW	F5
SW-16	REFR_HIGH_PRES_SW	F5
SW-17	REFR_HIGH_TEMP_SW	F5
SW-18	DX_FLOAT_SWITCH	H8
SW-19	DOOR_SWITCH	H7
TR-01	CTRL_TRANSFMR	B3
TR-03	MOD_VALVE_TRFMR_1	E8
TR-05	BOARD_POWER_TRFMR	E5
LD	LEAK_DETECTOR	F5
VA-01	MAIN_GAS_VALVE	E7
VA-05	MOD_GAS_VALVE	E7
VFD-01	SUPPLY_FAN_VFD	D3
VFD-02	COMP_VFD	C1

LEGEND

— — FIELD WIRING
——— FACTORY WIRING

BK- BLACK YW- YELLOW
BL- BLUE GY- GREY
BR- BROWN PR- PURPLE
OR- ORANGE RD- RED
WH- WHITE GR- GREEN
DR/BL- DR/BL STRIPE
BL/RD- BL/RD STRIPE
RD/GN- RD/GN STRIPE
WH/BL- WH/BL STRIPE

MOTOR INFO

OUTDOOR:1.21HP-380-480V-3P-1.6FLA
OUTDOOR PART:196056
SUPPLY: 1.5HP-460V-3P-2.1FLA
SUPPLY VFD PART: ESV112N04TXB571
COMP:VZH044CG
COMP MOTOR: 380-480V-3P-8.9RLA
COMP VFD PART:134L9473
REACTOR PART: KDRMA6L1

ELECTRICAL INFORMATION

MOTOR/CTRL CIRCUIT MCA: 16.1A
MOTOR/CTRL CIRCUIT MOP: 20A

JOB NAME	Pharr FY16 Impo...
DRAWING TITLE	
DESCRIPTION OF OPERATION	MUA BOARD (DETAILS TO FOLLOW)
JOB NO	7491786
DRAWN BY	AUTO
TYPE	FACTORY
DATE	4/25/2025
DWG NO	AW7491786-1

SUPPLY DRIVE PARAMETER SETTINGS

P100	(START SOURCE) = 01 (TERMINAL STRIP)
P150	(TB-30 OUTPUT) = 1
P194	PASSWORD = 225
P410	MODBUS ADDRESS = 21

ADJUST MANUALLY ON ALL DRIVES	
P103	VFD MAX FREQUENCY
P107	00 (IF 120 OR 208 VAC)
	OR 01 IF(230, 480 OR 575VAC)
P108	MOTOR FLA X 100 / DRIVE OUTPUT RATING
P167	REFERENCE BUILD SHEET
P171	P108 - 1

*NOTE: THE DEFAULT FOR THE DRIVE IS "225".

All external control wires to motor speed control should be 16-20 AWG shielded multi-conductor cables and must not be run in the same conduit or raceway with any high power wiring. Ground Shielded Cable at the drive chassis ONLY.

PG. 11, 19, 23 OF THE DRIVE MANUAL DESCRIBES THE PROPER HANDLING OF THE VARIABLE FREQUENCY DRIVE.

IT MAY BE REQUIRED TO FULLY POWER DOWN THE DRIVE AND TURN BACK ON IN ORDER TO INITIATE NEW PARAMETER SETTINGS.

**Min. and Max. Frequency Settings override all other Preset speeds/Parameters. Do not adjust these on the VFD. Min. and Max. Frequency should be adjust on the RTU HMI.

SMV 571 SERIES VFD

Terminal	Description
1	Digital Input:(Start/Stop)
11	Internal DC Supply for External Devices
2	Analog Common
30	Analog Output:Configurable with P150..P155
RJ45	MODBUS COMMUNICATION
PE	Ground Terminal
L1	3 Phase Input or Single Phase Input
L2	3 Phase Input or Single Phase Input
L3 (N)	3 Phase Input (Neutral for 120v)
U	3 Phase AC Motor
V	3 Phase AC Motor
W	3 Phase AC Motor

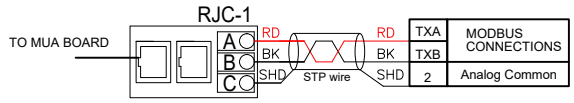

FOR SUPPLY FAN VFD's LARGER THAN 15HP USE RS485 TO MODBUS CONVERTER

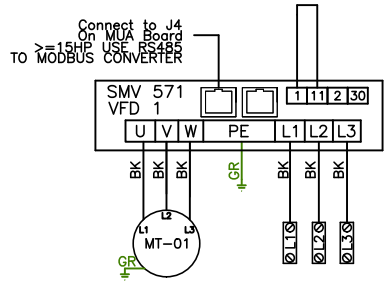

*Note: Not Suitable for Corner Grounded 3 Phase Input power

COMPRESSOR DRIVE PARAMETER SETTINGS MUST BE CONFIGURED BEFORE STARTUP

*Changing 8-30 will reset 8-01 and 8-03 if programmed after 8-01 and 8-03 are set

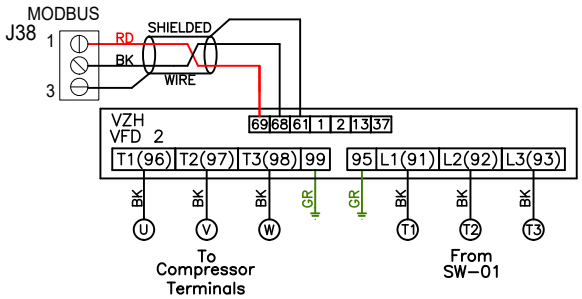

VZH SERIES COMPRESSOR VFD

TERMINAL	FUNCTION
13	24+
37	Pressure Switch In
1	Relay 1 to oil solenoid
2	Relay 1 to oil solenoid
61	COM RS-485
68	N RS-485
69	P RS-485
95	INPUT Ground
L1 (91)	3 Phase Input or Single Phase Input
L2 (92)	3 Phase Input or Single Phase Input
L3 (93)	3 Phase Input
T1 (96)	Compressor
T2 (97)	Compressor
T3 (98)	Compressor
99	Compressor Ground

*Must be programmed using software

MOTOR INFO

OUTDOOR:1.21HP-380-480V-3P-1.6FLA
OUTDOOR PART:196056
SUPPLY: 1.5HP-460V-3P-2.1FLA
SUPPLY VFD PART: ESV112N04TXB571
COMP:VZH044CG
COMP MOTOR: 380-480V-3P-8.9RLA
COMP VFD PART:134L9473
REACTOR PART: KDRMA6L1

ELECTRICAL INFORMATION

MOTOR/CTRL CIRCUIT MCA: 16.1A
MOTOR/CTRL CIRCUIT MOP: 20A

RTU VFD SCHEMATIC

COMPONENT LIST

LABEL	DESCRIPTION
MT-01	Supply Motor
PWS-01	24VDC Power Supply
SW-01	Main Disconnect Sw
VFD-1	Supply Motor VFD
VFD-2	Compressor VFD

LEGEND

-------- FIELD WIRING
——— FACTORY WIRING

BK- BLACK
BL- BLUE
BR- BROWN
OR- ORANGE
WH- WHITE
YW- YELLOW
GY- GREY
PR- PURPLE
RD- RED
GR- GREEN
OR/BL- OR/BL STRIPE
BL/RD- BL/RD STRIPE
RD/GN- RD/GN STRIPE
WH/BL- WH/BL STRIPE

JOB NAME	Pharr FY16 Impo...
DRAWING TITLE	
DESCRIPTION OF OPERATION	MUA BOARD (DETAILS TO FOLLOW)
JOB NO 7491786	DRAWN BY AUTO
TYPE FACTORY	DATE 4/25/2025
DWG NO	RTUVFD7491786-1

RTU Installation Wiring

JOB Pharr FY16 Import Dock & Ag Lab

DRAWING NUMBER INST7491786-1

MODEL CAS-HVAC1-I.125-13-7.5T-DOAS

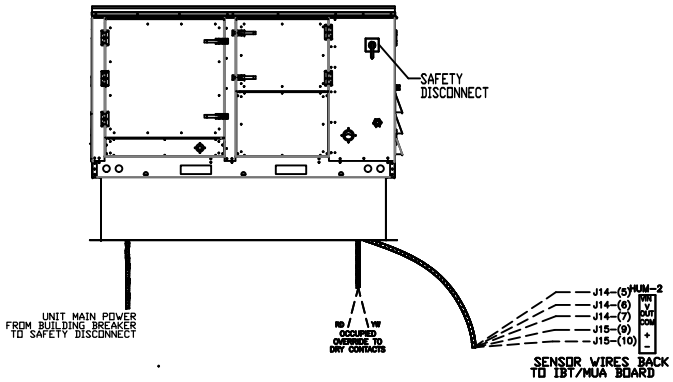

HMI SCHEDULE				
UNIT NUMBER	HMI #	HMI LOCATION	TEMP AVERAGING	MODBUS ADDRESS
FAN #1	HMI #1 - UNIT	IN UNIT	NOT AVERAGED	55
FAN #1	HMI #2 - SPACE		AVERAGED	56

Installed Options

OCCUPIED OVERRIDE

SPACE REHEAT CONTROL

BREAKER TO PRIMARY DISCONNECT

Responsibility Electrician BREAKER

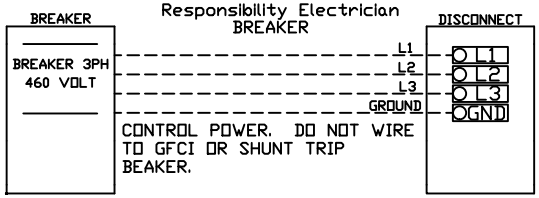

UNIT BOARD TO MAMAC SPACE SENSOR

Responsibility Electrician

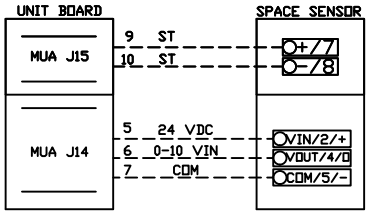

MUA BOARD TO OCCUPIED OVERRIDE

Responsibility Electrician

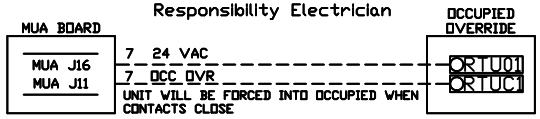

CONVENIENCE OUTLET TO SEPARATE 120V

Responsibility Electrician

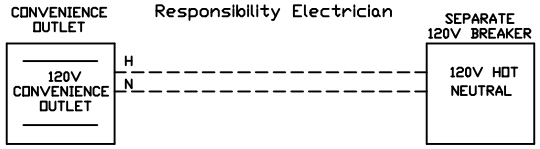

CAS BACNET TO BACNET MASTER

Responsibility Electrician

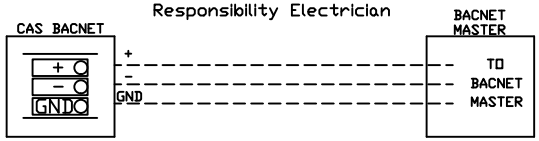

NOTES

— — — Field Wiring

WIRE COLOR

BK - BLACK	YW - YELLOW
BL - BLUE	GR - GREEN
BR - BROWN	GY - GRAY
OR - ORANGE	PR - PURPLE
RD - RED	PK - PINK
WH - WHITE	

CAS-HVAC2-I.150-15-10T-DOAS (#2) RTU-DOAS-3 Weight: 1908 lbs./90 curb

RTU with Indirect Fired Heat and 15" Direct Drive Plenum Fan, 1 Furnace, Electronic Full Modulation, Constant 81% Efficiency, and 6:1 Max Turndown for NG, (5:1 Max Turndown for LP). Stainless Steel Burner and Heat Exchanger.

SUPPLY MOTOR

Model GP1/54 • 1.500 HP, 3 Phs, 460 V, 60 Hz, 2.1 FLA, TEFC, Premium (E-Plus3) Eff.

SUPPLY PERFORMANCE

Supply Air:	1175 CFM	RPM:	1245
Return Air:	0 CFM	Outdoor Air:	1175 CFM
Tip Speed:	4889 ft/min	BHP:	0.6480
SP:	1.188" w.g. (1.000" Ductwork Discharge ESP + 0.188" Opt.)		
Altitude:	90 ft		

BLOWER

15 Inch Plenum Fan for size 2 RTU. Hub specified to match motor shaft.

TEMPERATURE CONTROL

CORRIDOR/GENERAL NEUTRAL VENTILATION • Discharge Temp Control • Heating and Cooling Activation Based On Intake Set Point • Manual Blower Mode • 100% Outdoor Air Freezestat • Smoke Detector Interlock • Additional HMI Ships Loose. Use with MUA.

AIRFLOW DIRECTION

- Down Discharge - Air Flow Left -> Right

CURB & SUPPORTS

- ROOF CURB - 49.5" Width, 75" Length, 14" Supply Height, Insulated.

HEATING SCHEDULE

Altitude:	90 ft
Output BTU:	121,500 BTU/Hr
Input BTU:	150,000 BTU/Hr
Based Off:	BTUs Actual Air Density
Gas Type:	Natural
HEAT PUMP	
Entering Temp:	40.0°F
Max Temp Rise:	46.0°F
Discharge Dry Bulb Temp:	86.0°F
COP:	3.4
GAS HEAT	
Winter Outdoor Air Dry Bulb Temp:	30.0°F
Temp Rise:	89.0°F
Discharge Dry Bulb Temp:	119.0°F

COOLING SCHEDULE

Outdoor Air Dry Bulb Temp:	101.0°F
Outdoor Air Wet Bulb Temp:	80.0°F
Max Outdoor Air %:	100%
Mixed Air Dry Bulb Temp:	101.0°F
Mixed Air Wet Bulb Temp:	80.0°F
Mixed Air Dew Point:	72.7°F
Leaving Dry Bulb Temp:	42.8°F
Leaving Wet Bulb Temp:	42.8°F
Leaving Dew Point:	42.8°F
Moisture Removal Rate:	55.8 Lb/Hr
Total Capacity:	139.6 MBH
Sensible Capacity:	74.1 MBH
Latent Capacity:	65.5 MBH
Reheat Coil Capacity:	96.0 MBH
Reheat Coil Leaving Dry Bulb Temp:	70.0°F
Reheat Coil Leaving Wet Bulb Temp:	55.1°F
Reheat Coil Leaving Relative Humidity:	38%
IEER:	18.6
ISMRE2:	7.3

SUPPLY INSTALLATION INFORMATION

Gas Pressure:	7 in. w.c. - 14 in. w.c.
Insurance Requirements:	No Insurance Requirement (ANSI)
Unit Voltage:	3 phs 460 V 60Hz
Unit Main Input:	27.2 Amps MCA • 30 Amps MOP • 460 V • 10 AWG Wire Min.
SCCR:	10 kAmp
A2L Min. Room Area / Airflow / Height:	359.8 ft2 • 648 CFM • 7.2 ft **

*** Minimum room area assumed 7.2' supply diffuser height and is calculated per UL60335-2-40 4th ed. Values based on factory charge. Actual site charge may differ.*

CONFIGURED OPTIONS

- Gas Pressure Gauge, 0-35", 2.5" Diameter, 1/4" Thread Size
- Gas Pressure Gauge, 0 to +10 Inches Wc., 2.5" Diameter, 1/8" Thread Size, Rear Thread
- Cooling Override
- Single Point Electrical Connection for RTU. QNTY 1 750va Transformer Used. If a Non-DCV Prewire controls this unit, the #28, #47, "MA", or "E2" Option Prewire must be selected. Do not provide supply starter in prewire.
- Unit will be shipped with construction mode ON. This is used to provide tempering for a building in construction. Activation is set to Intake, Tempering is set to Discharge, Mixing Box is set to 100% OA and HMI number is 1.
- RTU Blower Door Switch. Used to turn on DOOR INTERLOCK Schematic Layer. Does Not Include Door Switch.
- RTU Size 2 Down Discharge
- 2" Merv 13 Filters for Size 2 RTU. QTY 4, 16 x 20 x 2 Merv 13 Filters
- 2" Merv 8 Filters for Size 2 RTU. QTY 4, 16 x 20 x 2 Merv 8 Filters
- Overheat Stat factory set at 80°F and 10 minutes. Prevents unit from overheating the space when cooling.
- CFM monitoring for MUA units. Uses rivet nuts, 1/4" airflow tubing and push to connect fittings.
- VFD factory mounted and wired in unit control vestibule.
- 10 Ton Modulating Cooling Option with Heat Pump, 460/480V. R454B Refrigerant, Variable Speed Inverter Duty Compressor, ECM Condensing Fan(s).
- RTU Compressor Oil Sensor Factory Installed. M12 Style Connector.
- Low ambient cooling controls down to 0F ambient temperatures. To be used in recirculating applications.
- R454B Refrigerant Leak Detector Option. Includes 20% LFL sensor and harness.
- RTU Fixed 100% Outdoor Air Intake.
- Discharge Firestat. Set to 240°F
- Freezestat
- Intake Firestat. Set to 135°F
- CASLink building monitoring system communications module. Requires internet & field wired ethernet connection or 3G cellular service. Includes Rev 3 Comm Module, RJ45 to modbus converter, 3 FT cat5 cable, and 1 FT of shielded twisted pair.
- 10 Ton Heat Pump Modulating Reheat Option for Discharge Control - R454B
- Size 2 RTU Curb Duct Hanger - Adjustable Duct Hanger Support Brackets installed for both return and discharge duct.
- Remote MSTP BACnet monitoring
- Occupied Scheduling Defaulted for IBT/RTU.
- Clogged Filter Switch with Notification on HMI
- GFCI 15 amp Convenience Outlet For RTU2 Enclosure. 120V power supply by others. Includes receptacle, jbox & cover.
- RTU Size 2 Hail Guard for outdoor coil. Includes magnets and washers for installation.
- RTU Size 2 No Return
- Option for Metal Mesh Filters in RTU2 OA Intakes
- VAV (Variable-Air-Volume) Wiring Package for Commercial Fans. Manual Speed Control Variable Frequency Drive Included
- Supply Variable Frequency Drive - 1-1/2 HP Max., 400/480 V, Three Phase, 3.5/3.0 A Max., NEMA 1 Enclosure, with 2RJ-45 FOR MODBUS
- Mount Load Reactor in Fan.

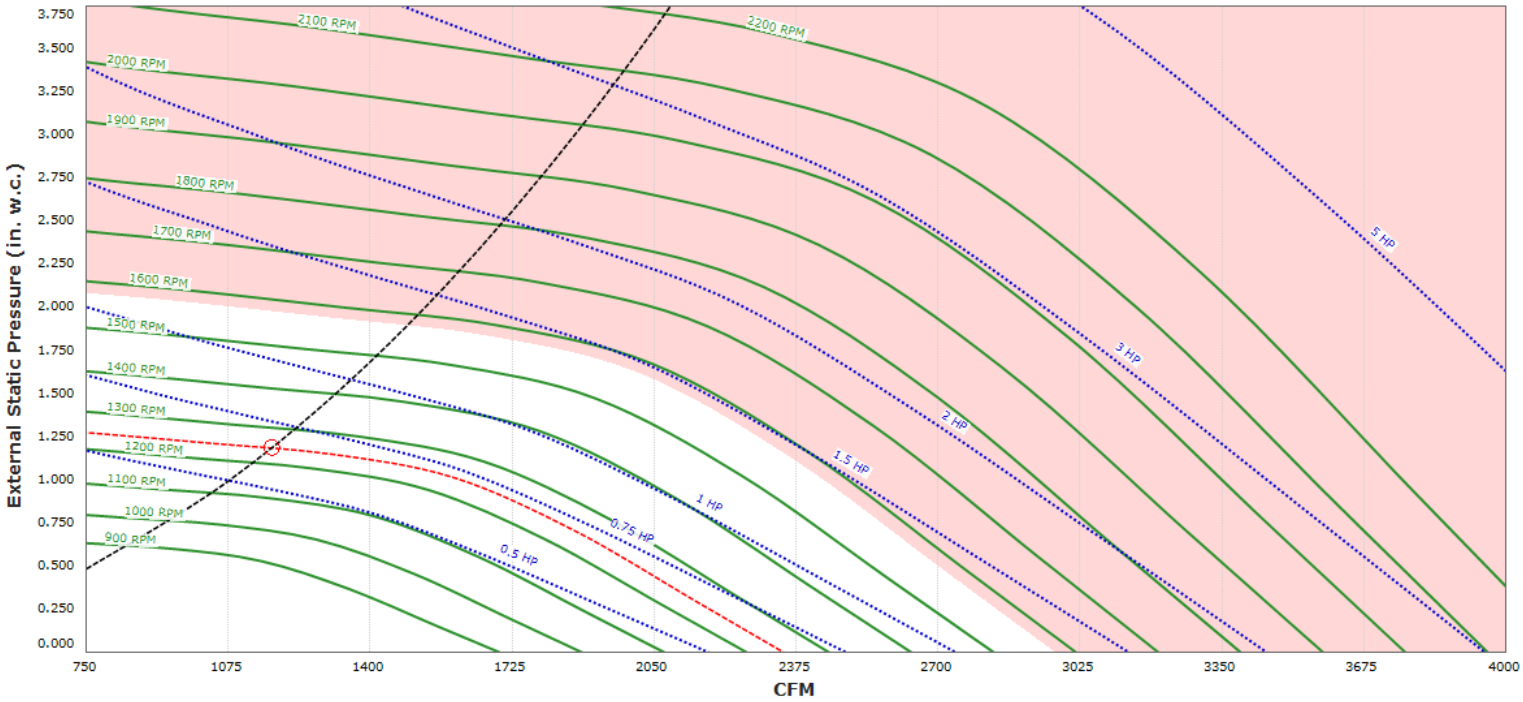

CAS-HVAC2-I.150-15-10T-DOAS SOUND (1245 RPM) AT 5 FT. IN OCTAVES:

1	2	3	4	5	6	7	8
84.3	86.6	83.1	80.1	80	73.3	74.3	74.5

LWA:	84.3	Sones:	22	DBA:	73.7

Note: Sound data across operational range. Tested in accordance to AHRI Standard 270/370.

FAN #2 CAS-HVAC2-I.150-15-10T-DOAS - HEATER (RTU-DOAS-3)

NOTES:
1. DO NOT OBSTRUCT OUTSIDE AIR INLET, OUTSIDE AIR COIL OR OUTSIDE AIR FAN.
2. ( ) DENOTES CORNER WEIGHT.
3. ROOF OPENING MUST BE 2" SMALLER THAN CURB DIMENSIONS IN BOTH DIRECTIONS.
4. CONNECTION FROM BREAKER TO UNITS SAFETY DISCONNECT SWITCH TO BE COPPER WIRE ONLY.
5. EXTERIOR GAS CONNECTION PROVIDED BY FACTORY WITH QUICK SEAL AND ANTI-ROTATION BRACKET.

*NOTE: SUPPLY DUCT MUST BE INSTALLED TO MEET SMACNA STANDARDS. A MINIMUM STRAIGHT DUCT LENGTH MUST BE MAINTAINED DOWNSTREAM OF UNIT DISCHARGE AS OUTLINED IN AMCA PUBLICATION 201. WHEN USING RECTANGULAR DUCTWORK, ELBOWS MUST BE RADIUS THROAT, RADIUS BACK WITH TURNING VANES. FLEXIBLE DUCTWORK AND SQUARE THROAT/SQUARE BACK ELBOWS SHOULD NOT BE USED. ANY TRANSITION AND/OR TURNS IN THE DUCTWORK WILL CAUSE SYSTEM EFFECT. SYSTEM EFFECT WILL DRASTICALLY INCREASE STATIC PRESSURE AND REDUCE AIRFLOW. DO NOT RELY ON UNIT TO SUPPORT DUCT IN ANY WAY. FAILURE TO PROPERLY SIZE DUCTWORK MAY CAUSE SYSTEM EFFECTS AND REDUCE PERFORMANCE OF THE EQUIPMENT.
SUGGESTED STRAIGHT DUCT SIZE IS 24" x 30.25".

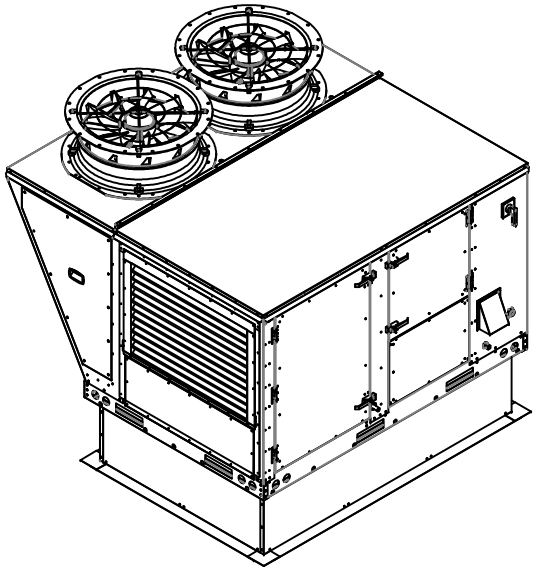

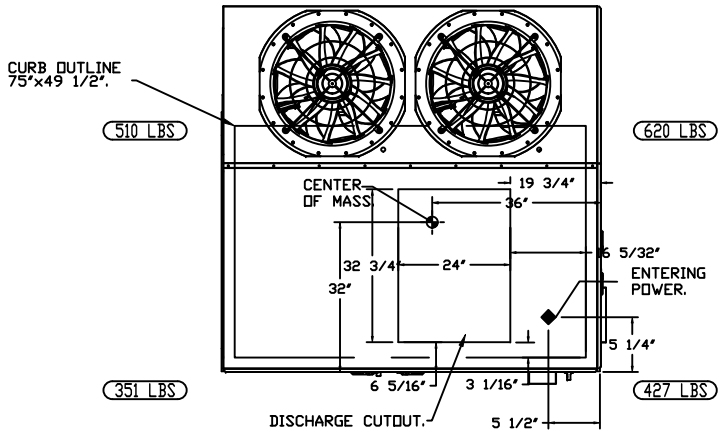

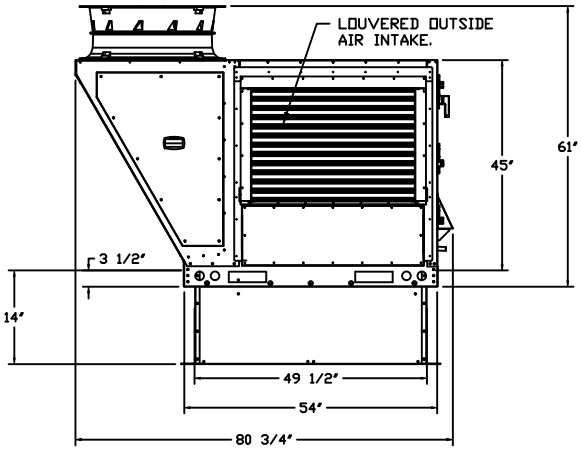

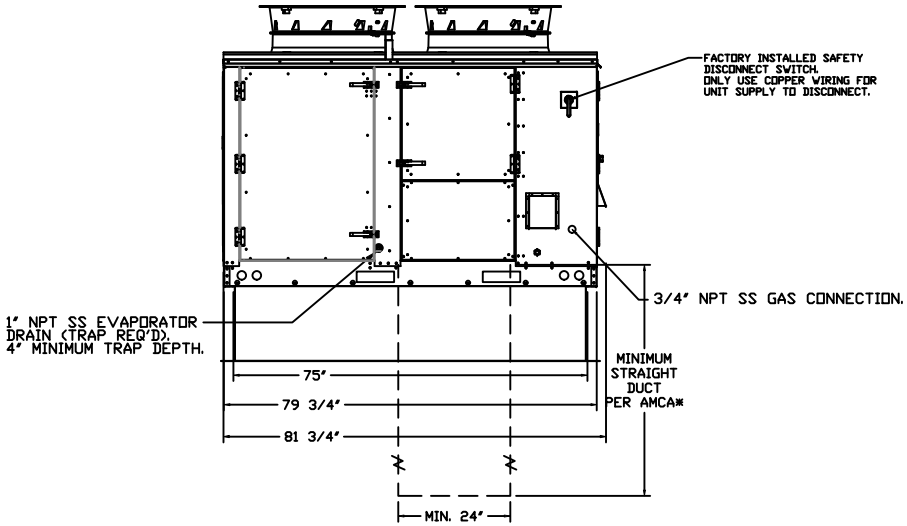

Fan #2 Curb
ROOF CURB - 49.5" Width, 75" Length, 14" Supply Height, Insulated.

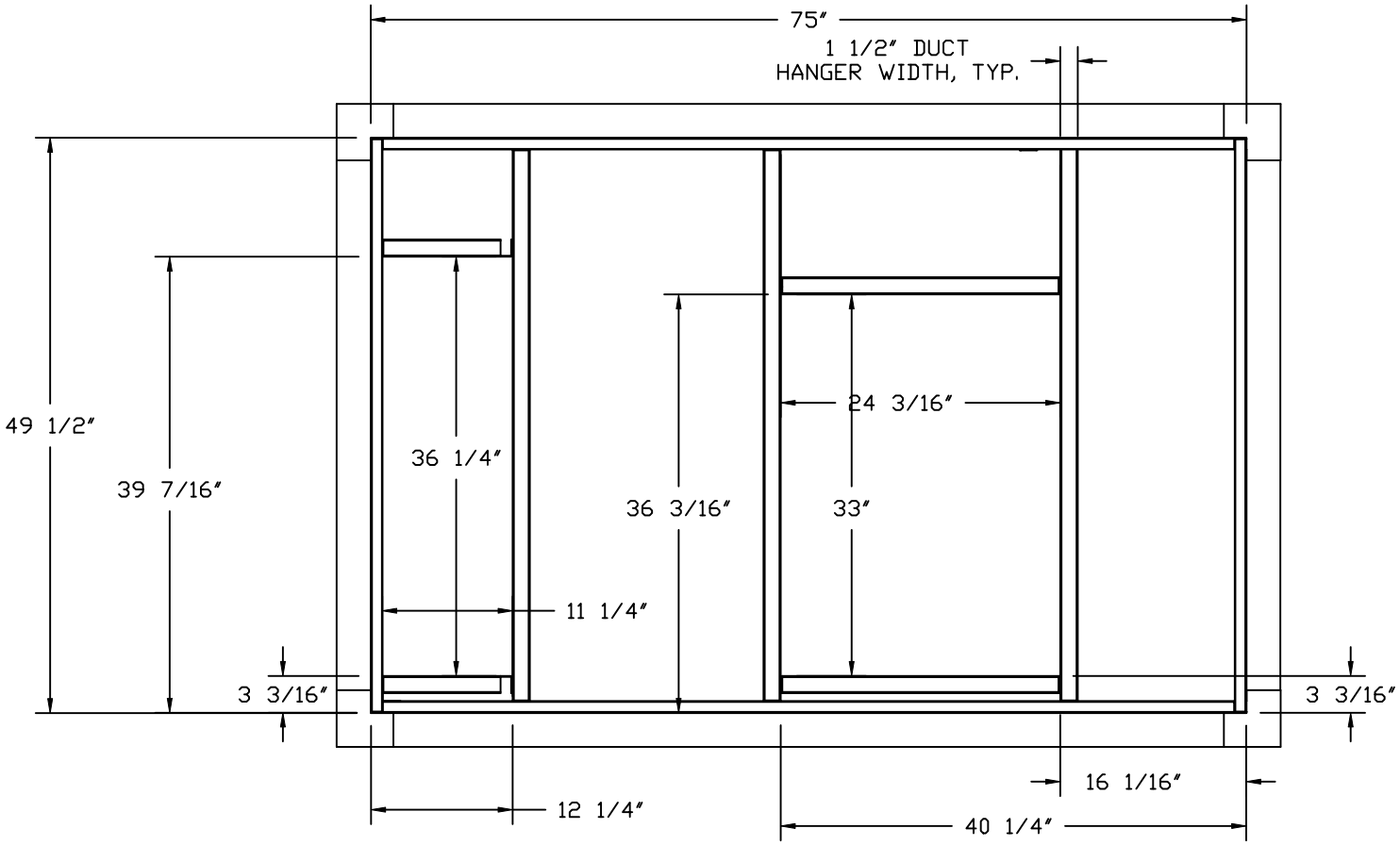

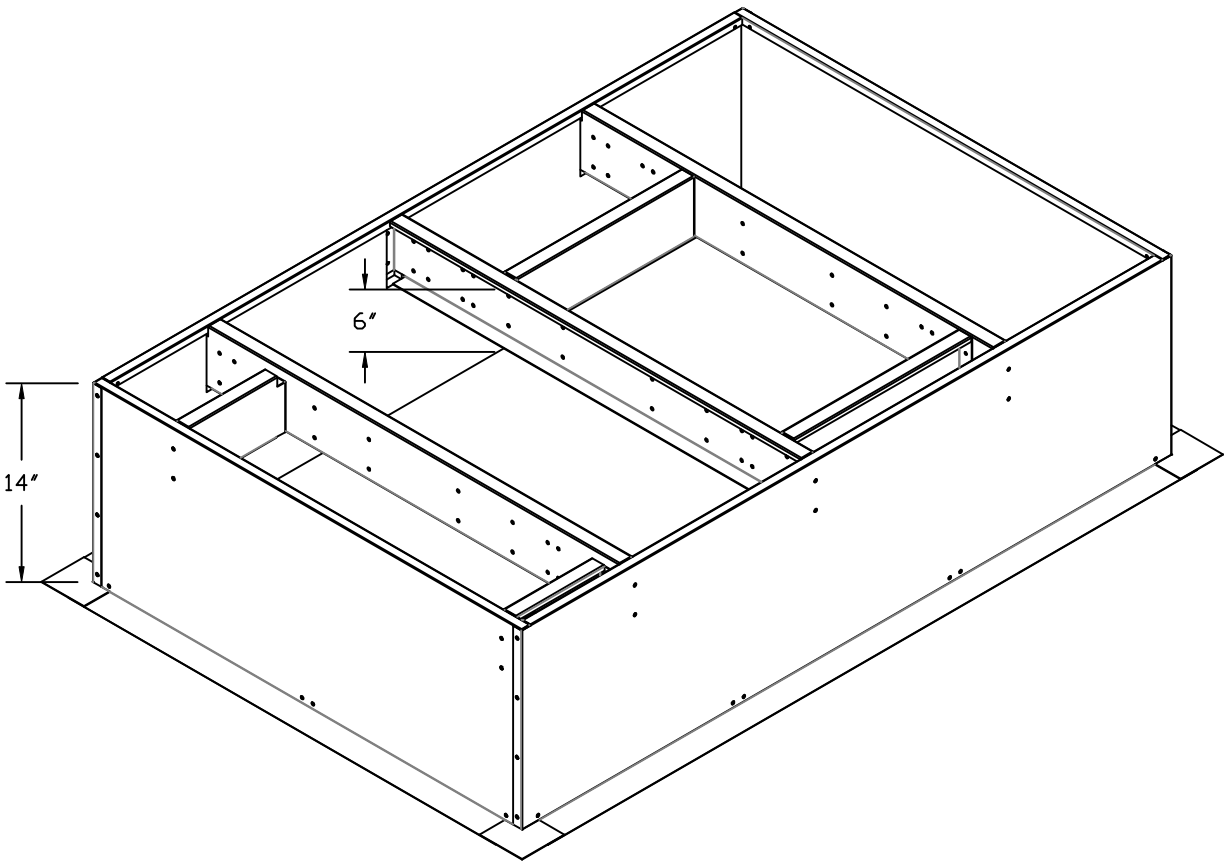

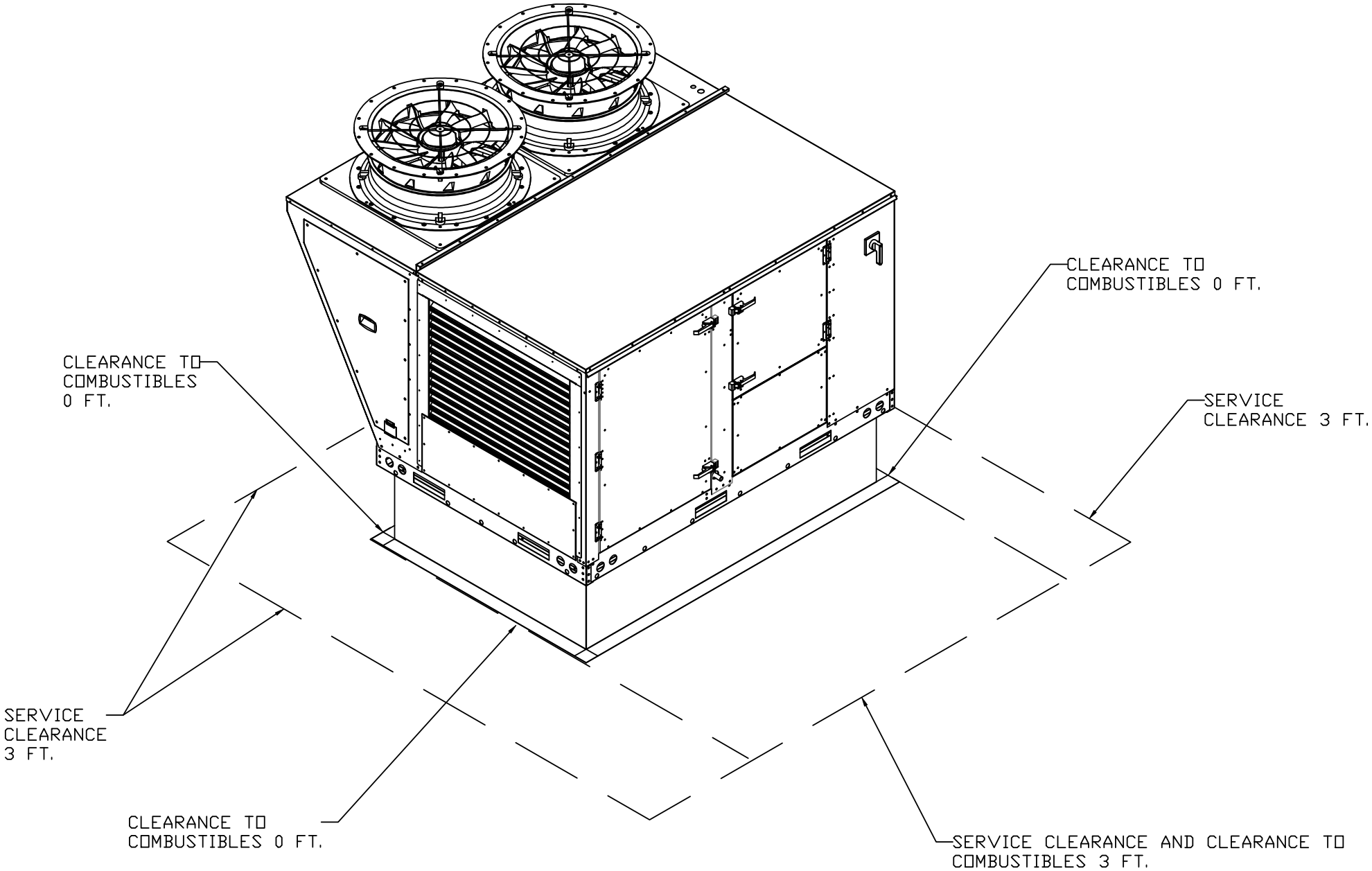

SIZE 2 - 2 CONDENSERS

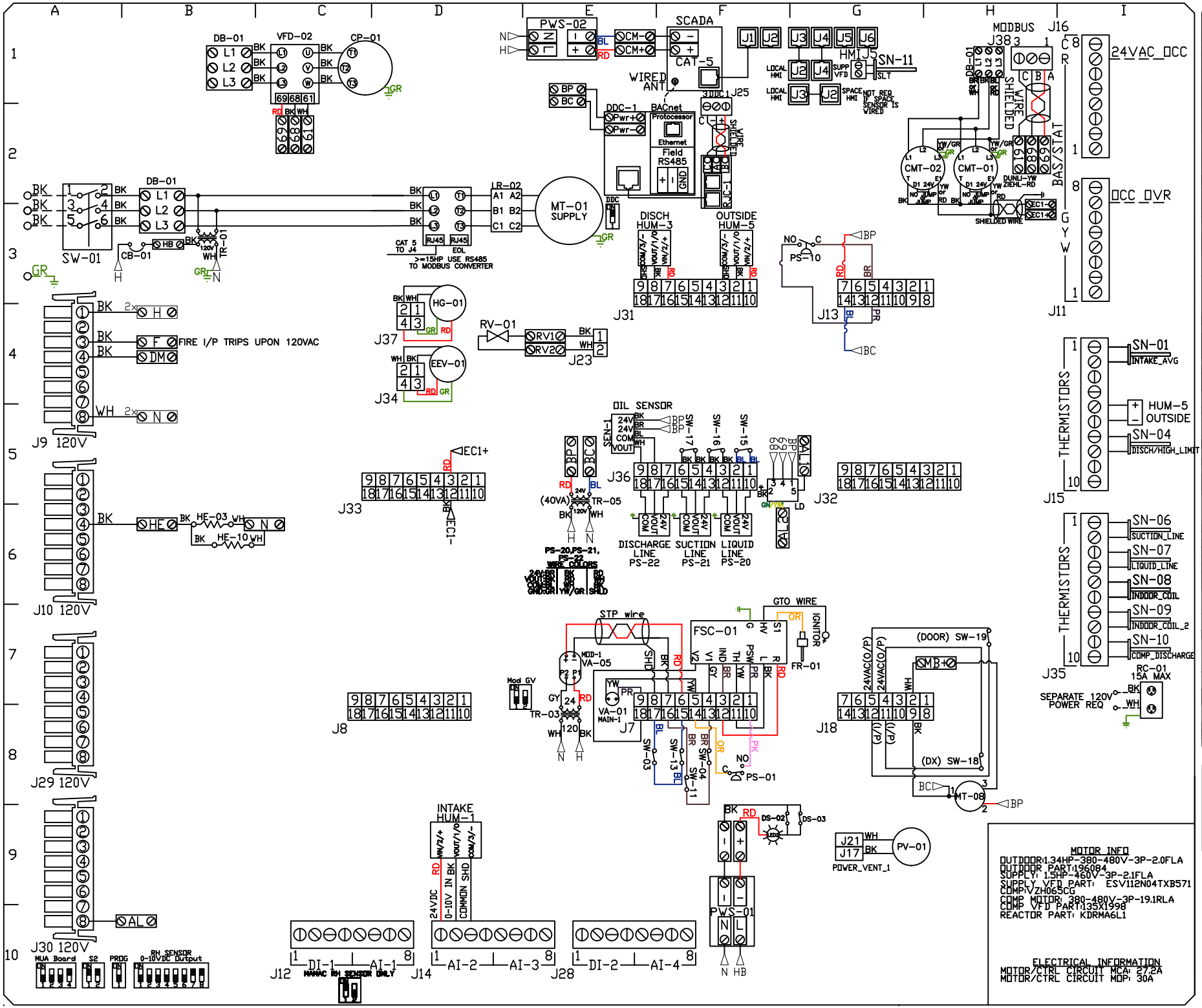

COMPONENT LIST

LABEL	DESCRIPTION	
CB-01	CIRCUIT_BREAKER	B3
SCADA	SCADA_COMM_MODULE	F1
CMT-XX	CONDENSING_MTR	G2
DB-01	DISTRIBUTION_BLOCK	B2
DS-XX	ELEC_DOOR_SWITCH	F9
EEV-01	ELEC_EXP_VALVE_1	D4
FR-01	FLAME_RDD	G7
FSC-01	FLAME_SAFETY_CTLR	C7
HE-03	CRANKCASE_HEATER	B6
HG-01	REHEAT_VALVE_1	D3
HE-10	ACCUMULATOR_HEATER	B6
HUM-XX	HUM/TEMP_SEN	F3/F9/E4/D9
LED-XX	CAB_LED_STRIP	F9
LR-XX	LINE/LOAD_REACTOR	D2
MT-01	SUPPLY_MOTOR	E3
MT-08	MB_DAMPER_MTR	H8
PS-01	VENT_PROVING_1	F8
PS-10	CLGGD_FILTER_SWITCH	G3
PS-20	LIQUID_LINE_PRES	F6
PS-21	SUCTION_LINE_PRES	F6
PS-22	DISCHARGE_LINE_PRES	F6
PV-XX	FURNACE_POWER_VENT	G9/H10
RC-01	CONV_OUTLET	I8
RV-01	REVERSING_VALVE	E4
SEN-1	OIL_SENSOR	F5
SN-XX	TEMP_SENSOR	I4/I5/I6/I7
SW-01	DISCONNECT_SWITCH	A3/I8
SW-03	ROLL_OUT_1-1	F8
SW-04	FURN_HIGH_TEMP_1-1	F8
SW-11	FURN_HIGH_TEMP_1-2	F8
SW-13	ROLL_OUT_1-2	F8
SW-15	REFR_LOW_PRES_SW	F5
SW-16	REFR_HIGH_PRES_SW	F5
SW-17	REFR_HIGH_TEMP_SW	F5
SW-18	DX_FLOAT_SWITCH	H8
SW-19	DOOR_SWITCH	H7
TR-01	CTRL_TRANSFMR	B3
TR-03	MOD_VALVE_TRFMR_1	E8
TR-05	BOARD_POWER_TRFMR	E5
LD	LEAK_DETECTOR	F5
VA-01	MAIN_GAS_VALVE	E7
VA-05	MOD_GAS_VALVE	E7
VFD-01	SUPPLY_FAN_VFD	D3
VFD-02	COMP_VFD	C1

LEGEND

- FIELD WIRING
- FACTORY WIRING

BK- BLACK, YW- YELLOW, BL- BLUE, GY- GREY, BR- BROWN, PR- PURPLE, OR- ORANGE, RD- RED, WH- WHITE, GR- GREEN, DR/BL- DR/BL STRIPE, BL/RD- BL/RD STRIPE, RD/GN- RD/GN STRIPE, WH/BL- WH/BL STRIPE

MOTOR INFO

OUTDOOR:1.34HP-380-480V-3P-2.0FLA
OUTDOOR PART:196084
SUPPLY: 1.5HP-460V-3P-2.1FLA
SUPPLY VFD PART: ESV112N04TXB571
COMP:VZH065CG
COMP MOTOR: 380-480V-3P-19.1RLA
COMP VFD PART:135X1998
REACTOR PART: KDRMA6L1

ELECTRICAL INFORMATION

MOTOR/CTRL CIRCUIT MCA: 27.2A
MOTOR/CTRL CIRCUIT MOP: 30A

JOB NAME	Pharr FY16 Impo...
DRAWING TITLE	
DESCRIPTION OF OPERATION	MUA BOARD (DETAILS TO FOLLOW)
JOB NO	7491786
DRAWN BY	AUTO
TYPE	FACTORY
DATE	4/25/2025
DWG NO	HW7491786-2

SUPPLY DRIVE PARAMETER SETTINGS

P100	(START SOURCE) = 01 (TERMINAL STRIP)
P150	(TB–30 OUTPUT) = 1
P194	PASSWORD = 225
P410	MODBUS ADDRESS = 21

ADJUST MANUALLY ON ALL DRIVES	
P103	VFD MAX FREQUENCY
P107	00 (IF 120 OR 208 VAC)
	OR 01 IF(230, 480 OR 575VAC)
P108	MOTOR FLA X 100 / DRIVE OUTPUT RATING
P167	REFERENCE BUILD SHEET
P171	P108 – 1

*NOTE: THE DEFAULT FOR THE DRIVE IS "225".

All external control wires to motor speed control should be 16–20 AWG shielded multi–conductor cables and must not be run in the same conduit or raceway with any high power wiring. Ground Shielded Cable at the drive chassis ONLY.

PG. 11, 19, 23 OF THE DRIVE MANUAL DESCRIBES THE PROPER HANDLING OF THE VARIABLE FREQUENCY DRIVE.

IT MAY BE REQUIRED TO FULLY POWER DOWN THE DRIVE AND TURN BACK ON IN ORDER TO INITIATE NEW PARAMETER SETTINGS.

**Min. and Max. Frequency Settings override all other Preset speeds/Parameters. Do not adjust these on the VFD. Min. and Max. Frequency should be adjust on the RTU HMI.

SMV 571 SERIES VFD

Terminal	Description
1	Digital Input:(Start/Stop)
11	Internal DC Supply for External Devices
2	Analog Common
30	Analog Output:Configurable with P150..P155
RJ45	MODBUS COMMUNICATION
PE	Ground Terminal
L1	3 Phase Input or Single Phase Input
L2	3 Phase Input or Single Phase Input
L3 (N)	3 Phase Input (Neutral for 120v)
U	3 Phase AC Motor
V	3 Phase AC Motor
W	3 Phase AC Motor

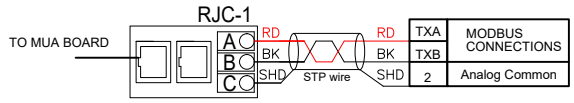

FOR SUPPLY FAN VFD's LARGER THAN 15HP USE RS485 TO MODBUS CONVERTER

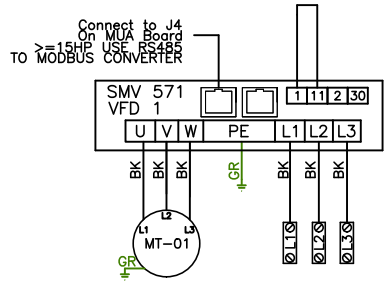

*Note: Not Suitable for Corner Grounded 3 Phase Input power

COMPRESSOR DRIVE PARAMETER SETTINGS MUST BE CONFIGURED BEFORE STARTUP

COMPRESSOR VFD 1

0–22	[1610] POWER KW
0–40	[2] PASSWORD
0–60	225
0–61	[1] LCP READ ONLY
0–66	[1] LCP READ ONLY
1–13	VZH065
3–15	[0] NO FUNCTION
3–16	[0] NO FUNCTION
3–41	200.00s
3–42	200.00s
3–51	30.00s
3–52	30.00s
8–01	[2] CTRL WORD ONLY
8–03	20 SECONDS
8–04	[2] STOP
8–30	[2] MODBUS RTU
8–31	1
8–32	19200
8–33	[0] EVEN PARITY, 1 STOP BIT
8–43–2	1610
8–43–3	1610
8–43–4	1613
8–43–5	1613
8–43–6	1614
8–43–7	1614
8–43–8	1690
8–43–9	1690
8–43–10	1634
8–43–12	1694
8–43–13	1694
28–00	DISABLE
28–11	1440m
28–12	24h

*Must be programmed using software

*Changing 8-30 will reset 8-01 and 8-03 if programmed after 8-01 and 8-03 are set

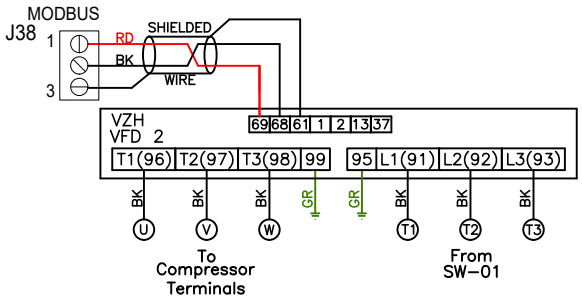

VZH SERIES COMPRESSOR VFD

TERMINAL	FUNCTION
13	24+
37	Pressure Switch In
1	Relay 1 to oil solenoid
2	Relay 1 to oil solenoid
61	COM RS–485
68	N RS–485
69	P RS–485
95	INPUT Ground
L1 (91)	3 Phase Input or Single Phase Input
L2 (92)	3 Phase Input or Single Phase Input
L3 (93)	3 Phase Input
T1 (96)	Compressor
T2 (97)	Compressor
T3 (98)	Compressor
99	Compressor Ground

MOTOR INFO
OUTDOOR:1.34HP-380-480V-3P-2.0FLA
OUTDOOR PART:196084
SUPPLY: 1.5HP-460V-3P-2.1FLA
SUPPLY VFD PART: ESV112N04TXB571
COMP:VZH065CG
COMP MOTOR: 380-480V-3P-19.1RLA
COMP VFD PART:135X1998
REACTOR PART: KDRMA6L1

ELECTRICAL INFORMATION
MOTOR/CTRL CIRCUIT MCA: 27.2A
MOTOR/CTRL CIRCUIT MOP: 30A

RTU VFD SCHEMATIC

COMPONENT LIST

LABEL	DESCRIPTION
MT–01	Supply Motor
PWS–01	24VDC Power Supply
SW–01	Main Disconnect Sw
VFD–1	Supply Motor VFD
VFD–2	Compressor VFD

LEGEND

FIELD WIRING
FACTORY WIRING

BK- BLACK	YW- YELLOW
BL- BLUE	GY- GREY
BR- BROWN	PR- PURPLE
OR- ORANGE	RD- RED
WH- WHITE	GR- GREEN
OR/BL- OR/BL STRIPE	
BL/RD- BL/RD STRIPE	
RD/GN- RD/GN STRIPE	
WH/BL- WH/BL STRIPE	

JOB NAME	Pharr FY16 Impo...
DRAWING TITLE	
DESCRIPTION OF OPERATION	MUA BOARD (DETAILS TO FOLLOW)
JOB NO 7491786	DRAWN BY AUTO
TYPE FACTORY	DATE 4/25/2025
DWG NO	RTUVFD7491786-2

RTU Installation Wiring

JOB *Pharr FY16 Import Dock & Ag Lab*

DRAWING NUMBER *INST7491786-2*

MODEL **CAS-HVAC2-I.150-15-10T-DOAS**

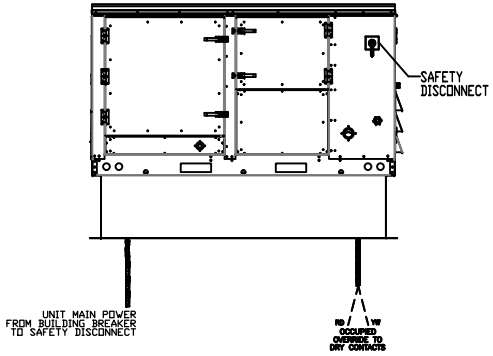

HMI SCHEDULE				
UNIT NUMBER	HMI #	HMI LOCATION	TEMP AVERAGING	MODBUS ADDRESS
FAN #2	HMI #1 - UNIT	IN UNIT	NOT AVERAGED	55
FAN #2	HMI #2 - SPACE		AVERAGED	56

BREAKER TO PRIMARY DISCONNECT

Responsibility Electrician BREAKER

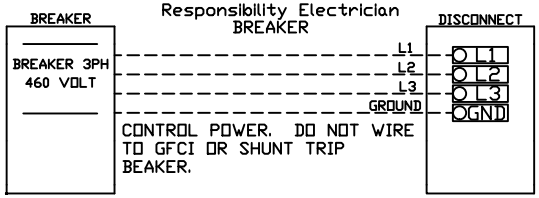

MUA BOARD TO OCCUPIED OVERRIDE

Responsibility Electrician

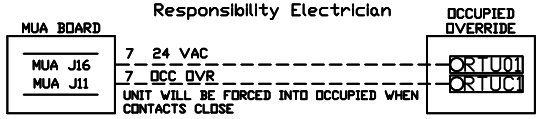

CONVENIENCE OUTLET TO SEPARATE 120V

Responsibility Electrician

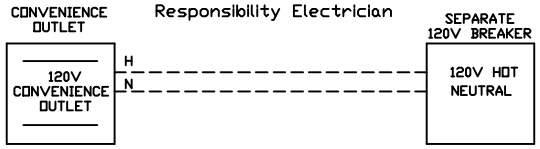

CAS BACNET TO BACNET MASTER

Responsibility Electrician

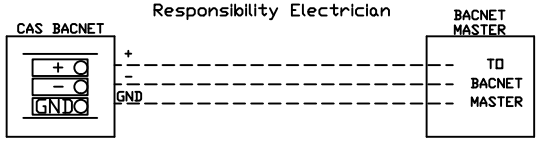

Installed Options

OCCUPIED OVERRIDE

NOTES

— — — Field Wiring

WIRE COLOR

BK - BLACK	YW - YELLOW
BL - BLUE	GR - GREEN
BR - BROWN	GY - GRAY
OR - ORANGE	PR - PURPLE
RD - RED	PK - PINK
WH - WHITE	

PCO #010

D. Wilson Construction
PO Box 3455
McAllen, Texas 78502
Phone: (956) 686-9573

Project: 24-235 - Pharr FY16 DAP-Agricultural Lab, Dock Expansion I & II
9901 S Cage Blvd
Pharr, Texas 78577

Prime Contract Potential Change Order #010: VE Credit: PVC vs. Cast Iron UG @ Slab

TO:	City Of Pharr PO Box 1729 Pharr, Texas 78577	**FROM:**	D Wilson Construction Company PO Box 3455 McAllen, Texas 78502
PCO NUMBER/REVISION:	010 / 0	**CONTRACT:**	24-235 - City of Pharr Dock Expansion
REQUEST RECEIVED FROM:	Hector Noyola **(Padron Plumbing, Inc.)**	**CREATED BY:**	Pilar Anzaldua-Garza **(D Wilson Construction Company)**
STATUS:	Pending - In Review	**CREATED DATE:**	3/18/2025
REFERENCE:	VE	**PRIME CONTRACT CHANGE ORDER:**	None
EXECUTED:	No	**SIGNED CHANGE ORDER RECEIVED DATE:**	
SCHEDULE IMPACT:		**TOTAL AMOUNT:**	($25,600.00)

POTENTIAL CHANGE ORDER TITLE: VE Credit: PVC vs. Cast Iron UG @ Slab

CHANGE REASON: Design Development

POTENTIAL CHANGE ORDER DESCRIPTION: *(The Contract Is Changed As Follows)*
CE #006 - VE Credit for PVC vs. Cast Iron Underground
We are pleased to offer this value engineered credit to substitute Sanitary Sewer piping below slab only from "cast iron" to "PVC DWV Schedule 40". If approved, we will proceed with PVC below slab continue with Cast Iron above ground. If approved, kindly include in a change document at your earliest convenience.

ATTACHMENTS:

#	Budget Code	Description	Amount
1	112.15-100.S	PVC vs Cast Iron - Credit	$(25,600.00)
		Grand Total:	**$(25,600.00)**

Brownstone Consultants, LLC
P.O. Box 3898
McAllen, Texas 78505

SIGNATURE 04/30/2025 **DATE**

City Of Pharr
PO Box 1729
Pharr, Texas 78577

Maria Luisa Rangel
SIGNATURE 05/05/2025 **DATE**

D Wilson Construction Company
PO Box 3455
McAllen, Texas 78502

SIGNATURE **DATE**

Request for Pricing

December 31, 2024

Subcontractor: Padron Plumbing, Inc.
1418 S. North Carolina St.
Mission, TX. 78573
(956) 424-1372

Contractor: D. Wilson Construction

Project: Pharr FY16 DAP

Attn: Ernest Trevino

Ref: Underground Credit

Description: Credit to substitute Sanitary Sewer Below Slab from Cast Iron to PVC DWV Schedule 40.

Credit Total: $25,600.00

Respectfully,

Hector Noyola

Chief Estimator

**Original contract exclusions Apply*

halff

Submittal Review Form

Date Due 4/29/2025	**Submittal**	22 13 16 - Sanitary Waste and Vent Piping and Accessories	**Submittal Number** 22 13 16
Quantity Received 1 Electronic PDF	**Project Name**	PHARR FY16 DAP - IMPORT DOCK AND AG LAB IMPROVEMENTS	**Submittal Sent to** Sabrina Alvarez Brownstone Consultants
	AVO	57325.002	
Quantity Returned 1 Electronic PDF	**Log-in Date**	4/15/2025	
	Date Reviewed	4/24/2025	
	Reviewed by	Mark Sislen, P.E.	

ITEM	DESCRIPTION Product Data/Shop Drawing/Warranty/ Certification, etc	COMMENTS	A	RR	R	RO
1	Sanitary Waste and Vent Piping, Primer, and Solvent.	No Comments.	☒	☐	☐	☐
2	Specialty Pipe Fittings	No Comments.	☒	☐	☐	☐
3	No Hub Couplings	No Comments.	☒	☐	☐	☐
4	Di-Electric Unions	No Comments.	☒	☐	☐	☐
5	Di-Electric Flanged Fittings	No Comments	☒	☐	☐	☐
6	Encasement	No Comments.	☒	☐	☐	☐

A – Reviewed, No Exceptions Taken
RR – Revise and Resubmit, Make Corrections Noted
R – Rejected, Revise and Resubmit
RO – Received for Record/File/Information Only

A/E's review is for general conformance with the design concept and contract documents. Markings or comments shall not be construed as relieving the contractor from compliance with the project plans and specifications nor departures therefrom. The contractor remains responsible for details and accuracy for confirming and correlating all quantities and dimensions for selecting fabrication processes, for techniques of assembly and for performing this work in a safe manner.

Date: 4/24/2025

By: Mark Sislen
Halff

halff

Corrections or comments made on the shop drawings during this review do not relieve contractor from compliance with requirements of the drawings and specifications. This check is only for review of general conformance with the design concept of the project and general compliance with the information given in the contract documents. The contractor is responsible for confirming and correlating all quantities and dimensions; selecting fabrication processes and techniques of construction; coordinating his work with that of all other trades and performing his work in a safe and satisfactory manner.

☑ NO EXCEPTIONS TAKEN ☐ REVISE AND RESUBMIT
☐ EXCEPTIONS NOTED ☐ REJECTED

Date: 4/24/2025 By: Mark Sislen

Submittal item detail

#22 13 16-18-0: Sanitary Waste and Vent Piping

Status	Created on	Ball in court due date
Open In Review	Nov 19, 2024	Apr 29, 2025

ID	24
Ball in court	**David Chacon** (Brownstone Consultants) **Rolando Ayala**
Manager	**Rolando Ayala**
Responsible contractor	**Sabrina Alvarez** (Brownstone Consultants)
Watchers	**Sabrina Alvarez** (Brownstone Consultants)
Spec section	22 13 16 Sanitary Waste and Vent Piping
Spec sub section	
Description	
Final Response	
Final Response Attachments	
Final Response Comments	
Package	

Ball in court	Sent	Due	Returned	Response/Action	Attachments
Submitted					
Sabrina Alvarez (Brownstone Consultants) Submitted by Sabrina Alvarez	Apr 15, 2025	Apr 15, 2025	Apr 15, 2025	**Submitted**	24-235-SBT 22 13 16 Sanitary and Vent Piping Submittal.pdf
Comments	-				
Sent for review					
Rolando Ayala Sent by Sabrina Alvarez	Apr 15, 2025	-	Apr 15, 2025	**Sent for review**	
Comments	-				
Review Step 1					
David Chacon (Brownstone Consultants)	Apr 15, 2025	Apr 29, 2025	-		
Comments					
Rolando Ayala	Apr 15, 2025	Apr 29, 2025	-		
Comments					

24-235 - Pharr FY16 DAP-Agricultural Lab, Dock Expansion I & II

9901 S Cage Blvd
Pharr, Texas 78577
United States

D. Wilson Construction
PO Box 3455
McAllen, Texas 78502
United States
(956) 686-9573

Title
22 13 16 Sanitary Waste and Vent Piping - Product Data

Submittal Manager
Roberto Villela

Spec Section
22 13 16 - Sanitary Waste and Vent Piping

Type
Product Data

Number
22 13 16-1

Rev
0

Description
A. Product Data: For each type of product indicated.

D. WILSON CONSTRUCTION CO.
Reviewed By: Rob Villela, APM
This data has been reviewed and found to comply with applicable provisions of the contract. This review does not relieve the sub-contractor and/or supplier from compliance with the requirements of the plans and specifications.
ALL SUB-CONTRACTORS & SUPPLIERS MUST FIELD VERIFY ALL DIMENSIONS & QUANTITIES.
Sub-contractor to provide all equipment and materials which meet or exceed design requirements of the project plans and specifications.
REVIEWED FOR GENERAL COMPLIANCE
Date Reviewed:
D. WILSON CONSTRUCTION CO.
Rob Villela

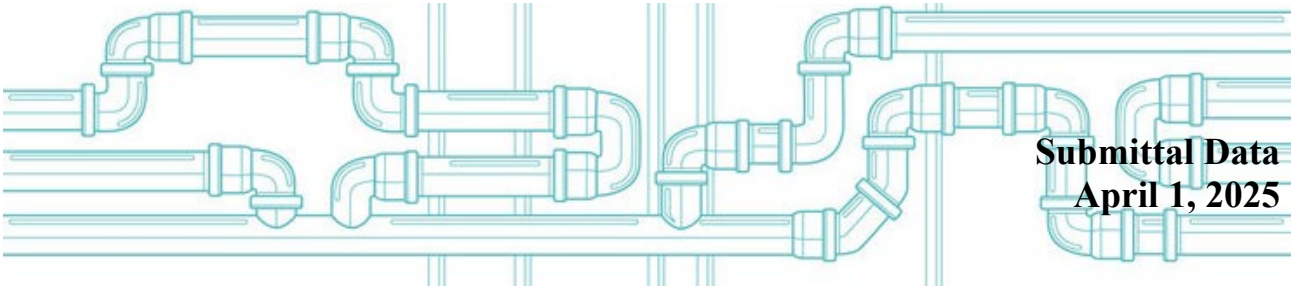

Submittal Data
April 1, 2025

Padron Plumbing Inc.

1418 S. North Carolina St. Mission, TX 78573

(956)424-1372 ~ padronplumb@aol.com

Pharr FY16-DAP Import Dock and Ag Lab Improvements

9901 S. Cage Blvd.

Pharr, Texas 78577

DIVISION 22 -PLUMBING SUBMITTALS

Section 22 13 16

Sanitary Waste and Vent Piping

Project Name: Pharr FY16-DAP Import Dock and Ag Lab Improvements

Table of Contents

Part

221316 Sanitary Waste and Vent Piping _ Part 2 - Products

2.2 Hub-and-Spigot, Cast-Iron Soil Pipe and Fittings (Not Applicable)

2.3 Hubless, Cast-Iron Soil Pipe and Fittings

- Below Ground Pipe
  - Charlotte PVC Sch 40 Solid Wall Pipe & PVC DWV Fittings
  - Oatey Purple Primer
  - Oatey Medium Gray PVC Cement
- Above Ground Pipe
  - Charlotte Hubless Cast Iron Soil Pipe and Fittings

2.4 Specialty Pipe Fittings

2.4 A Transition Couplings

- Anaco-Husky No Hub-Coupling

2.4 B Dielectric Fittings

- 2.4.B2 Dielectric Unions
  - Series LF3002
- 2.4.B.3 Dielectric Flanges
  - Series 3200
- 2.4.B.4 Dielectric-Flange Insulating Kits
  - Flange Isolating Gasket Kits
- 2.4.B.5 Dielectric Nipples
  - PPP Clearflow

2.5 Encasement for Underground Metal Piping

- American Ductile Iron Pipe Traditional Polyethylene Encasement

SECTION 221316 - SANITARY WASTE AND VENT PIPING

PART 1 - GENERAL

1.1 RELATED DOCUMENTS

A. Drawings and general provisions of the Contract, including General and Supplementary Conditions and Division 01 Specification Sections, apply to this Section.

1.2 SUMMARY

A. Section Includes:

1. Pipe, tube, and fittings.
2. Specialty pipe fittings.
3. Encasement for underground metal piping.

1.3 PERFORMANCE REQUIREMENTS

A. Components and installation shall be capable of withstanding the following minimum working pressure unless otherwise indicated:

1. Soil, Waste, and Vent Piping: 10-foot head of water.
2. Waste, Force-Main Piping: 100 psig.

1.4 ACTION SUBMITTALS

A. Product Data: For each type of product indicated.

1.5 INFORMATIONAL SUBMITTALS

A. Seismic Qualification Certificates: For waste and vent piping, accessories, and components, from manufacturer.

1. Basis for Certification: Indicate whether withstand certification is based on actual test of assembled components or on calculation.
2. Detailed description of piping anchorage devices on which the certification is based and their installation requirements.

B. Field quality-control reports.

SENSITIVE BUT UNCLASSIFIED (SBU) PROPERTY OF THE UNITED STATES GOVERNMENT.
FOR OFFICIAL USE ONLY.
Do not remove this notice. Property destroy documents when no longer needed.

1.6 QUALITY ASSURANCE

A. Piping materials shall bear label, stamp, or other markings of specified testing agency.

B. Comply with NSF/ANSI 14, "Plastics Piping Systems Components and Related Materials," for plastic piping components. Include marking with "NSF-dwv" for plastic drain, waste, and vent piping and "NSF-sewer" for plastic sewer piping.

1.7 PROJECT CONDITIONS

A. Interruption of Existing Sanitary Waste Service: Do not interrupt service to facilities occupied by Owner or others unless permitted under the following conditions and then only after arranging to provide temporary service according to requirements indicated:

1. Notify Architect and/or Engineer no fewer than three days in advance of proposed interruption of sanitary waste service.
2. Do not proceed with interruption of sanitary waste service without Architect's written permission.

PART 2 - PRODUCTS

Per pre-construction meeting: Below Ground to be substituted for Charlotte PVC Schedule 40 Solid Wall Pipe & PVC DWV Fittings; Oatey Purple Primer; Oatey Medium Gray PVC Cement

2.1 PIPING MATERIALS

COMPLY A. Comply with requirements in "Piping Schedule" Article for applications of pipe, tube, fitting materials, and joining methods for specific services, service locations, and pipe sizes.

2.2 HUB-AND-SPIGOT, CAST-IRON SOIL PIPE AND FITTINGS

NOT USED A. Pipe and Fittings: ASTM A 74, Service class. Pipe and fittings shall be marked with the collective trademark of the Cast Iron Soil Pipe Institute and be listed by NSF International.

B. Gaskets: ASTM C 564, rubber.

C. Caulking Materials: ASTM B 29, pure lead and oakum or hemp fiber.

COMPLY 2.3 HUBLESS, CAST-IRON SOIL PIPE AND FITTINGS

A. Pipe and Fittings: ASTM A 888 or CISPI 301. Pipe and fittings shall be marked with the collective trademark of the Cast Iron Soil Pipe Institute and be listed by NSF International.

B. Solvent Stack Fittings: ASME B16.45 or ASSE 1043, hubless, cast-iron aerator and deaerator drainage fittings.

C. Heavy-Duty, Hubless-Piping Couplings:

SENSITIVE BUT UNCLASSIFIED (SBU) PROPERTY OF THE UNITED STATES GOVERNMENT.
FOR OFFICIAL USE ONLY.
Do not remove this notice. Property destroy documents when no longer needed.

1. Standards: ASTM C 1277 and ASTM C 1540.
2. Description: Stainless-steel shield with stainless-steel bands and tightening devices; and ASTM C 564, rubber sleeve with integral, center pipe stop.

2.4 SPECIALTY PIPE FITTINGS

A. Transition Couplings:

1. General Requirements: Fitting or device for joining piping with small differences in OD's or of different materials. Include end connections same size as and compatible with pipes to be joined.
2. Fitting-Type Transition Couplings: Manufactured piping coupling or specified piping system fitting.
3. Unshielded, Nonpressure Transition Couplings:

    a. Standard: ASTM C 1173.
    b. Description: Elastomeric, sleeve-type, reducing or transition pattern. Include shear ring and corrosion-resistant-metal tension band and tightening mechanism on each end.
    c. Sleeve Materials:

        1) For Cast-Iron Soil Pipes: ASTM C 564, rubber.
        2) For Plastic Pipes: ASTM F 477, elastomeric seal or ASTM D 5926, PVC.
        3) For Dissimilar Pipes: ASTM D 5926, PVC or other material compatible with pipe materials being joined.

COMPLY 4. Shielded, Nonpressure Transition Couplings:

    a. Standard: ASTM C 1460.
    b. Description: Elastomeric or rubber sleeve with full-length, corrosion-resistant outer shield and corrosion-resistant-metal tension band and tightening mechanism on each end.

5. Pressure Transition Couplings:

    a. Standard: AWWA C219.
    b. Description: Metal, sleeve-type same size as, with pressure rating at least equal to, and ends compatible with, pipes to be joined.
    c. Center-Sleeve Material: Manufacturer's standard.
    d. Gasket Material: Natural or synthetic rubber.
    e. Metal Component Finish: Corrosion-resistant coating or material.

COMPLY B. Dielectric Fittings:

1. General Requirements: Assembly of copper alloy and ferrous materials with separating nonconductive insulating material. Include end connections compatible with pipes to be joined.

SENSITIVE BUT UNCLASSIFIED (SBU) PROPERTY OF THE UNITED STATES GOVERNMENT.
FOR OFFICIAL USE ONLY.
Do not remove this notice. Property destroy documents when no longer needed.

COMPLY 2. Dielectric Unions:

a. Description:

1) Standard: ASSE 1079.
2) Pressure Rating: 150 psig.
3) End Connections: Solder-joint copper alloy and threaded ferrous.

COMPLY 3. Dielectric Flanges:

a. Description:

1) Standard: ASSE 1079.
2) Factory-fabricated, bolted, companion-flange assembly.
3) Pressure Rating: 150 psig.
4) End Connections: Solder-joint copper alloy and threaded ferrous; threaded solder-joint copper alloy and threaded ferrous.

COMPLY 4. Dielectric-Flange Insulating Kits:

a. Description:

1) Nonconducting materials for field assembly of companion flanges.
2) Pressure Rating: 150 psig.
3) Gasket: Neoprene or phenolic.
4) Bolt Sleeves: Phenolic or polyethylene.
5) Washers: Phenolic with steel backing washers.

COMPLY 5. Dielectric Nipples:

a. Description:

1) Standard: IAPMO PS 66
2) Electroplated steel nipple.
3) Pressure Rating: 300 psig at 225 deg F.
4) End Connections: Male threaded or grooved.
5) Lining: Inert and noncorrosive, propylene.

COMPLY 2.5 ENCASEMENT FOR UNDERGROUND METAL PIPING

A. Standard: ASTM A 674 or AWWA C105/A 21.5.

B. Material: Linear low-density polyethylene film of 0.008-inch or high-density, cross-laminated polyethylene film of 0.004-inch minimum thickness.

C. Form: Tube.

D. Color: Black.

SENSITIVE BUT UNCLASSIFIED (SBU) PROPERTY OF THE UNITED STATES GOVERNMENT.
FOR OFFICIAL USE ONLY.
Do not remove this notice. Property destroy documents when no longer needed.

PART 3 - EXECUTION

3.1 EARTH MOVING

A. Comply with requirements for excavating, trenching, and backfilling specified in Section 312000 "Earth Moving."

3.2 PIPING INSTALLATION

A. Drawing plans, schematics, and diagrams indicate general location and arrangement of piping systems. Indicated locations and arrangements were used to size pipe and calculate friction loss, expansion, pump sizing, and other design considerations. Install piping as indicated unless deviations to layout are approved on coordination drawings.

B. Install piping in concealed locations unless otherwise indicated and except in equipment rooms and service areas.

C. Install piping indicated to be exposed and piping in equipment rooms and service areas at right angles or parallel to building walls. Diagonal runs are prohibited unless specifically indicated otherwise.

D. Install piping above accessible ceilings to allow sufficient space for ceiling panel removal.

E. Install piping to permit valve servicing.

F. Install piping at indicated slopes.

G. Install piping free of sags and bends.

H. Install fittings for changes in direction and branch connections.

I. Install piping to allow application of insulation.

J. Make changes in direction for soil and waste drainage and vent piping using appropriate branches, bends, and long-sweep bends. Sanitary tees and short-sweep 1/4 bends may be used on vertical stacks if change in direction of flow is from horizontal to vertical. Use long-turn, double Y-branch and 1/8-bend fittings if two fixtures are installed back to back or side by side with common drain pipe. Straight tees, elbows, and crosses may be used on vent lines. Do not change direction of flow more than 90 degrees. Use proper size of standard increasers and reducers if pipes of different sizes are connected. Reducing size of drainage piping in direction of flow is prohibited.

K. Lay buried building drainage piping beginning at low point of each system. Install true to grades and alignment indicated, with unbroken continuity of invert. Place hub ends of piping upstream. Install required gaskets according to manufacturer's written instructions for use of lubricants, cements, and other installation requirements. Maintain swab in piping and pull past each joint as completed.

SENSITIVE BUT UNCLASSIFIED (SBU) PROPERTY OF THE UNITED STATES GOVERNMENT.
FOR OFFICIAL USE ONLY.
Do not remove this notice. Property destroy documents when no longer needed.

L. Install soil and waste drainage and vent piping at the following minimum slopes unless otherwise indicated:

1. Building Sanitary Drain: 2 percent downward in direction of flow for piping NPS 3 and smaller; 1 percent downward in direction of flow for piping NPS 4 and larger.
2. Horizontal Sanitary Drainage Piping: 2 percent downward in direction of flow.
3. Vent Piping: 1 percent down toward vertical fixture vent or toward vent stack.

M. Install cast-iron soil piping according to CISPI's "Cast Iron Soil Pipe and Fittings Handbook," Chapter IV, "Installation of Cast Iron Soil Pipe and Fittings."

1. Install encasement on underground piping according to ASTM A 674 or AWWA C105/A 21.5.

N. Install steel piping according to applicable plumbing code.

O. Install underground, ductile-iron, force-main piping according to AWWA C600. Install buried piping inside building between wall and floor penetrations and connection to sanitary sewer piping outside building with restrained joints. Anchor pipe to wall or floor. Install thrust-block supports at vertical and horizontal offsets.

1. Install encasement on piping according to ASTM A 674 or AWWA C105/A 21.5.

P. Install underground, copper, force-main tubing according to CDA's "Copper Tube Handbook."

1. Install encasement on piping according to ASTM A 674 or AWWA C105/A 21.5.

Q. Install force mains at elevations indicated.

R. Plumbing Specialties:

1. Install backwater valves in sanitary waste gravity-flow piping. Comply with requirements for backwater valves specified in Section 221319 "Sanitary Waste Piping Specialties."
2. Install cleanouts at grade and extend to where building sanitary drains connect to building sanitary sewers in sanitary drainage gravity-flow piping. Install cleanout fitting with closure plug inside the building in sanitary drainage force-main piping. Comply with requirements for cleanouts specified in Section 221319 "Sanitary Waste Piping Specialties."
3. Install drains in sanitary drainage gravity-flow piping. Comply with requirements for drains specified in Section 221319 "Sanitary Waste Piping Specialties."

S. Do not enclose, cover, or put piping into operation until it is inspected and approved by authorities having jurisdiction.

T. Install sleeves for piping penetrations of walls, ceilings, and floors. Comply with requirements for sleeves specified in Section 220517 "Sleeves and Sleeve Seals for Plumbing Piping."

SENSITIVE BUT UNCLASSIFIED (SBU) PROPERTY OF THE UNITED STATES GOVERNMENT.
FOR OFFICIAL USE ONLY.
Do not remove this notice. Property destroy documents when no longer needed.

U. Install sleeve seals for piping penetrations of concrete walls and slabs. Comply with requirements for sleeve seals specified in Section 220517 "Sleeves and Sleeve Seals for Plumbing Piping."

V. Install escutcheons for piping penetrations of walls, ceilings, and floors. Comply with requirements for escutcheons specified in Section 220518 "Escutcheons for Plumbing Piping."

3.3 JOINT CONSTRUCTION

A. Join hub-and-spigot, cast-iron soil piping with gasket joints according to CISPI's "Cast Iron Soil Pipe and Fittings Handbook" for compression joints.

B. Join hub-and-spigot, cast-iron soil piping with calked joints according to CISPI's "Cast Iron Soil Pipe and Fittings Handbook" for lead-and-oakum calked joints.

C. Join hubless, cast-iron soil piping according to CISPI 310 and CISPI's "Cast Iron Soil Pipe and Fittings Handbook" for hubless-piping coupling joints. No-Hub couplings shall conform to CISPI Standard 310 and shall be listed by NSF International.

D. Threaded Joints: Thread pipe with tapered pipe threads according to ASME B1.20.1. Cut threads full and clean using sharp dies. Ream threaded pipe ends to remove burrs and restore full ID. Join pipe fittings and valves as follows:

1. Apply appropriate tape or thread compound to external pipe threads unless dry seal threading is specified.
2. Damaged Threads: Do not use pipe or pipe fittings with threads that are corroded or damaged. Do not use pipe sections that have cracked or open welds.

E. Join stainless-steel pipe and fittings with gaskets according to ASME A112.3.1.

F. Grooved Joints: Cut groove ends of pipe according to AWWA C606. Lubricate and install gasket over ends of pipes or pipe and fitting. Install coupling housing sections, over gasket, with keys seated in piping grooves. Install and tighten housing bolts.

G. Flanged Joints: Align bolt holes. Select appropriate gasket material, size, type, and thickness. Install gasket concentrically positioned. Use suitable lubricants on bolt threads. Torque bolts in cross pattern.

3.4 SPECIALTY PIPE FITTING INSTALLATION

A. Transition Couplings:

1. Install transition couplings at joints of piping with small differences in OD's.
2. In Drainage Piping: Shielded, nonpressure transition couplings.
3. In Aboveground Force Main Piping: Fitting-type transition couplings.
4. In Underground Force Main Piping:

SENSITIVE BUT UNCLASSIFIED (SBU) PROPERTY OF THE UNITED STATES GOVERNMENT.
FOR OFFICIAL USE ONLY.
Do not remove this notice. Property destroy documents when no longer needed.

a. NPS 1-1/2 and Smaller: Fitting-type transition couplings.
b. NPS 2 and Larger: Pressure transition couplings.

B. Dielectric Fittings:

1. Install dielectric fittings in piping at connections of dissimilar metal piping and tubing.
2. Dielectric Fittings for NPS 2 and Smaller: Use dielectric nipples.
3. Dielectric Fittings for NPS 2-1/2 to NPS 4: Use dielectric flange kits.
4. Dielectric Fittings for NPS 5 and Larger: Use dielectric flange kits.

3.5 VALVE INSTALLATION

A. General valve installation requirements are specified in Section 220523 "General-Duty Valves for Plumbing Piping."

B. Shutoff Valves:

1. Install shutoff valve on each sewage pump discharge.
2. Install gate or full-port ball valve for piping NPS 2 and smaller.
3. Install gate valve for piping NPS 2-1/2 and larger.

C. Check Valves: Install swing check valve, between pump and shutoff valve, on each sewage pump discharge.

D. Backwater Valves: Install backwater valves in piping subject to backflow.

1. Horizontal Piping: Horizontal backwater valves.
2. Floor Drains: Drain outlet backwater valves unless drain has integral backwater valve.
3. Install backwater valves in accessible locations.
4. Comply with requirements for backwater valve specified in Section 221319 "Sanitary Waste Piping Specialties."

3.6 HANGER AND SUPPORT INSTALLATION

A. Comply with requirements for pipe hanger and support devices and installation specified in Section 220529 "Hangers and Supports for Plumbing Piping and Equipment."

1. Install carbon-steel pipe hangers for horizontal piping in noncorrosive environments.
2. Install stainless-steel pipe hangers for horizontal piping in corrosive environments.
3. Install carbon-steel pipe support clamps for vertical piping in noncorrosive environments.
4. Install stainless-steel pipe support clamps for vertical piping in corrosive environments.
5. Vertical Piping: MSS Type 8 or Type 42, clamps.
6. Install individual, straight, horizontal piping runs:

a. 100 Feet and Less: MSS Type 1, adjustable, steel clevis hangers.
b. Longer Than 100 Feet: MSS Type 43, adjustable roller hangers.

SENSITIVE BUT UNCLASSIFIED (SBU) PROPERTY OF THE UNITED STATES GOVERNMENT.
FOR OFFICIAL USE ONLY.
Do not remove this notice. Property destroy documents when no longer needed.

c. Longer Than 100 Feet if Indicated: MSS Type 49, spring cushion rolls.

7. Multiple, Straight, Horizontal Piping Runs 100 Feet or Longer: MSS Type 44, pipe rolls. Support pipe rolls on trapeze.
8. Base of Vertical Piping: MSS Type 52, spring hangers.

B. Support horizontal piping and tubing within 12 inches of each fitting, valve, and coupling.

C. Support vertical piping and tubing at base and at each floor.

D. Rod diameter may be reduced one size for double-rod hangers, with 3/8-inch minimum rods.

E. Install hangers for cast-iron soil piping with the following maximum horizontal spacing and minimum rod diameters:

1. NPS 1-1/2 and NPS 2: 60 inches with 3/8-inch rod.
2. NPS 3: 60 inches with 1/2-inch rod.
3. NPS 4 and NPS 5: 60 inches with 5/8-inch rod.
4. NPS 6 and NPS 8: 60 inches with 3/4-inch rod.
5. NPS 10 and NPS 12: 60 inches with 7/8-inch rod.
6. Spacing for 10-foot lengths may be increased to 10 feet. Spacing for fittings is limited to 60 inches.

F. Install supports for vertical cast-iron soil piping every 15 feet.

G. Support piping and tubing not listed above according to MSS SP-69 and manufacturer's written instructions.

3.7 CONNECTIONS

A. Drawings indicate general arrangement of piping, fittings, and specialties.

B. Connect soil and waste piping to exterior sanitary sewerage piping. Use transition fitting to join dissimilar piping materials.

C. Connect drainage and vent piping to the following:

1. Plumbing Fixtures: Connect drainage piping in sizes indicated, but not smaller than required by plumbing code.
2. Plumbing Fixtures and Equipment: Connect atmospheric vent piping in sizes indicated, but not smaller than required by authorities having jurisdiction.
3. Plumbing Specialties: Connect drainage and vent piping in sizes indicated, but not smaller than required by plumbing code.
4. Install test tees (wall cleanouts) in conductors near floor and floor cleanouts with cover flush with floor.
5. Install horizontal backwater valves with cleanout cover flush with floor.
6. Comply with requirements for backwater valves, cleanouts, and drains specified in Section 221319 "Sanitary Waste Piping Specialties."

SENSITIVE BUT UNCLASSIFIED (SBU) PROPERTY OF THE UNITED STATES GOVERNMENT.
FOR OFFICIAL USE ONLY.
Do not remove this notice. Property destroy documents when no longer needed.

7. Equipment: Connect drainage piping as indicated. Provide shutoff valve if indicated and union for each connection. Use flanges instead of unions for connections NPS 2-1/2 and larger.

D. Connect force-main piping to the following:

1. Sanitary Sewer: To exterior force main.

E. Where installing piping adjacent to equipment, allow space for service and maintenance of equipment.

F. Make connections according to the following unless otherwise indicated:

1. Install unions, in piping NPS 2 and smaller, adjacent to each valve and at final connection to each piece of equipment.
2. Install flanges, in piping NPS 2-1/2 and larger, adjacent to flanged valves and at final connection to each piece of equipment.

3.8 IDENTIFICATION

A. Identify exposed sanitary waste and vent piping. Comply with requirements for identification specified in Section 220553 "Identification for Plumbing Piping and Equipment."

3.9 FIELD QUALITY CONTROL

A. During installation, notify authorities having jurisdiction at least 24 hours before inspection must be made. Perform tests specified below in presence of authorities having jurisdiction.

1. Roughing-in Inspection: Arrange for inspection of piping before concealing or closing-in after roughing-in and before setting fixtures.
2. Final Inspection: Arrange for final inspection by authorities having jurisdiction to observe tests specified below and to ensure compliance with requirements.

B. Reinspection: If authorities having jurisdiction find that piping will not pass test or inspection, make required corrections and arrange for reinspection.

C. Reports: Prepare inspection reports and have them signed by authorities having jurisdiction.

D. Test sanitary drainage and vent piping according to procedures of authorities having jurisdiction or, in absence of published procedures, as follows:

1. Test for leaks and defects in new piping and parts of existing piping that have been altered, extended, or repaired. If testing is performed in segments, submit separate report for each test, complete with diagram of portion of piping tested.
2. Leave uncovered and unconcealed new, altered, extended, or replaced drainage and vent piping until it has been tested and approved. Expose work that was covered or concealed before it was tested.

SENSITIVE BUT UNCLASSIFIED (SBU) PROPERTY OF THE UNITED STATES GOVERNMENT.
FOR OFFICIAL USE ONLY.
Do not remove this notice. Property destroy documents when no longer needed.

3. Roughing-in Plumbing Test Procedure: Test drainage and vent piping except outside leaders on completion of roughing-in. Close openings in piping system and fill with water to point of overflow, but not less than 10-foot head of water. From 15 minutes before inspection starts to completion of inspection, water level must not drop. Inspect joints for leaks.
4. Finished Plumbing Test Procedure: After plumbing fixtures have been set and traps filled with water, test connections and prove they are gastight and watertight. Plug vent-stack openings on roof and building drains where they leave building. Introduce air into piping system equal to pressure of 1-inch wg. Use U-tube or manometer inserted in trap of water closet to measure this pressure. Air pressure must remain constant without introducing additional air throughout period of inspection. Inspect plumbing fixture connections for gas and water leaks.
5. Repair leaks and defects with new materials and retest piping, or portion thereof, until satisfactory results are obtained.
6. Prepare reports for tests and required corrective action.

E. Test force-main piping according to procedures of authorities having jurisdiction or, in absence of published procedures, as follows:

1. Leave uncovered and unconcealed new, altered, extended, or replaced force-main piping until it has been tested and approved. Expose work that was covered or concealed before it was tested.
2. Cap and subject piping to static-water pressure of 50 psig above operating pressure, without exceeding pressure rating of piping system materials. Isolate test source and allow to stand for four hours. Leaks and loss in test pressure constitute defects that must be repaired.
3. Repair leaks and defects with new materials and retest piping, or portion thereof, until satisfactory results are obtained.
4. Prepare reports for tests and required corrective action.

3.10 CLEANING AND PROTECTION

A. Clean interior of piping. Remove dirt and debris as work progresses.

B. Protect drains during remainder of construction period to avoid clogging with dirt and debris and to prevent damage from traffic and construction work.

C. Place plugs in ends of uncompleted piping at end of day and when work stops.

3.11 PIPING SCHEDULE

A. Flanges and unions may be used on aboveground pressure piping unless otherwise indicated.

B. Aboveground, soil and waste piping shall be any of the following:

1. Service class, cast-iron soil pipe and fittings; gaskets; and gasketed joints.

SENSITIVE BUT UNCLASSIFIED (SBU) PROPERTY OF THE UNITED STATES GOVERNMENT.
FOR OFFICIAL USE ONLY.
Do not remove this notice. Property destroy documents when no longer needed.

2. Hubless, cast-iron soil pipe and fittings; heavy-duty hubless-piping couplings; and coupled joints.
3. Dissimilar Pipe-Material Couplings: Shielded, nonpressure transition couplings.

C. Aboveground, vent piping shall be any of the following:

1. Service class, cast-iron soil pipe and fittings; gaskets; and gasketed joints.
2. Hubless, cast-iron soil pipe and fittings; heavy-duty hubless-piping couplings; and coupled joints.
3. Dissimilar Pipe-Material Couplings: Shielded, nonpressure transition couplings.

D. Underground, soil, waste, and vent piping shall be:

1. Service class, cast-iron soil piping; gaskets; and gasketed joints.
2. Dissimilar Pipe-Material Couplings: Shielded, nonpressure transition couplings.

END OF SECTION 221316

SENSITIVE BUT UNCLASSIFIED (SBU) PROPERTY OF THE UNITED STATES GOVERNMENT.
FOR OFFICIAL USE ONLY.
Do not remove this notice. Property destroy documents when no longer needed.

(This page left intentionally blank.)

SENSITIVE BUT UNCLASSIFIED (SBU) PROPERTY OF THE UNITED STATES GOVERNMENT.
FOR OFFICIAL USE ONLY.
Do not remove this notice. Property destroy documents when no longer needed.

CHARLOTTE
PIPE AND FOUNDRY COMPANY®

SUBMITTAL FOR CHARLOTTE PIPE®
PVC SCHEDULE 40 SOLID WALL PIPE AND PVC DWV FITTING SYSTEM

Date: _____

Job Name: _____ Location: _____

Engineer: _____ Contractor: _____

Scope:
This specification covers PVC Schedule 40 solid wall pipe and PVC DWV fittings used in sanitary drain, waste and vent (DWV), sewer and storm drainage applications. This system is intended for use in non-pressure applications where the operating temperature will not exceed 140° F.

Specification:
Pipe shall be manufactured from virgin rigid PVC (polyvinyl chloride) vinyl compounds with a cell class of 12454 as identified in ASTM D 1784. PVC Schedule 40 pipe shall be Iron Pipe Size (IPS) conforming to ASTM D 1785 and ASTM D 2665. Injection molded PVC DWV fittings shall conform to ASTM D 2665. Fabricated PVC DWV fittings shall conform to ASTM F 1866. All pipe and fittings shall be manufactured in the United States. All systems shall utilize a separate waste and vent system. Pipe and fittings shall conform to NSF International Standard 14.

Installation:
Installation shall comply with the latest installation instructions published by Charlotte Pipe and Foundry and shall conform to all applicable plumbing, fire, and building code requirements. Buried pipe shall be installed in accordance with ASTM D 2321 and ASTM F 1668. Solvent cement joints shall be made in a two-step process with primer conforming to ASTM F 656 and solvent cement conforming to ASTM D 2564. The system shall be protected from chemical agents, fire-stopping materials, thread sealant, plasticized-vinyl products or other aggressive chemical agents not compatible with PVC compounds. The system shall be hydrostatically tested after installation.
WARNING! Never test with or transport/store compressed air or gas in PVC pipe or fittings. Doing so can result in explosive failures and cause severe injury or death.

Referenced Standards:

ASTM D 1784:	Rigid Vinyl Compounds
ASTM D 1785:	PVC Plastic Pipe, Schedule 40
ASTM D 2665:	PVC Drain, Waste and Vent Pipe and Fittings
ASTM D 2564:	Solvent Cements for PVC Pipe and Fittings
ASTM D 2321:	Underground Installation of Thermoplastic Pipe (non-pressure applications)
ASTM F 656:	Primers for PVC Pipe and Fittings
ASTM F 1668:	Procedures for Buried Plastic Pipe
ASTM F 1866:	Fabricated PVC DWV Fittings
NSF Standard 14:	Plastic Piping Components and Related Materials

MADE IN USA

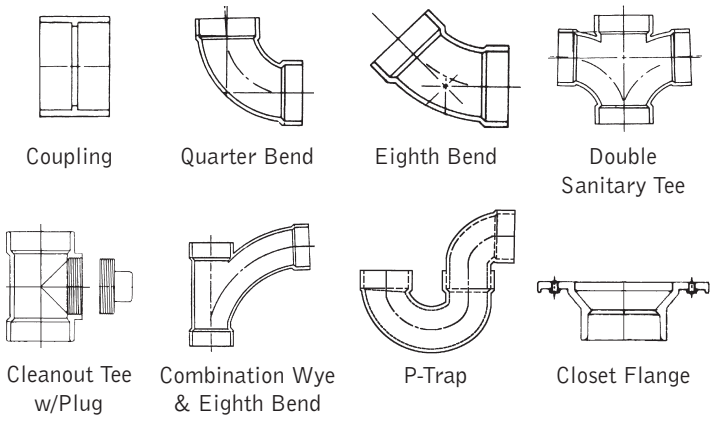

Not all fitting patterns shown

PVC Schedule 40 DWV Pipe

PVC Schedule 40 DWV Pipe

NSF

PVC SCHEDULE 40 (WHITE)		PLAIN END		PVC 1120		ASTM D 2665
PART NO.	NOM. SIZE	UPC # 611942-	QTY. PER SKID	AVG. OD (IN.)	MIN. WALL (IN.)	WT. PER 100 FT. (LBS.)
PVC 7100*	1¼″x10′	03945	2120′	1.660	.140	42.4
PVC 7100*	1¼″x20′	03946	4240′	1.660	.140	42.4
PVC 7112*	1½″x10′	03947	1650′	1.900	.145	51.8
PVC 7112*	1½″x20′	03948	3300′	1.900	.145	51.8
PVC 7200*	2″x10′	03949	1110′	2.375	.154	69.5
PVC 7200*	2″x20′	03950	2220′	2.375	.154	69.5
PVC 7300*	3″x10′	03951	1130′	3.500	.216	144.2
PVC 7300*	3″x20′	03952	1000′	3.500	.216	144.2
PVC 7400†	4″x10′	03953	670′	4.500	.237	205.5
PVC 7400†	4″x20′	03954	1340′	4.500	.237	205.5
PVC 7500†	5″x20′	04837	760′	5.563	.258	272.5
PVC 7600†	6″x10′	03955	330′	6.625	.280	361.2
PVC 7600†	6″x20′	03956	660′	6.625	.280	361.2
PVC 7800†	8″x10′	13087	180′	8.625	.322	543.6
PVC 7800†	8″x20′	03958	360′	8.625	.322	543.6
PVC 7910†	10″x20′	03959	220′	10.750	.365	770.7
PVC 7912†	12″x20′	03961	120′	12.750	.406	1019.0
PVC 7914†	14″x20′	04862	60′	14.000	.437	1205.0
PVC 7916†	16″x20′	04918	60′	16.000	.500	1575.7

* Dual Marked ASTM D 1785 & ASTM D 2665.
† Triple Marked ASTM D 1785 & ASTM D 2665 & ASTM F 480.

Charlotte Pipe and Foundry Company • P.O. Box 35430 Charlotte, NC 28235 • (800) 438-6091 • www.charlottepipe.com

Charlotte Pipe and Charlotte Pipe and Foundry Company are registered trademarks of Charlotte Pipe and Foundry Company.

FO-SUB-PVC-DWV (10-17-19)

PURPLE PRIMER – NSF LISTED TECHNICAL SPECIFICATION

Job Name _____ Item # _____
Location _____
Engineer _____ Contractor _____
PO # _____ Tag _____
Representative _____

SPECIFICATIONS

- Purple-tinted aggressive primer for use on PVC and CPVC pipe and fittings.
- Lo-V.O.C. Solvent Cement meets California South Coast Air Quality Management District (SCAQMD) 1168/316A or BAAQMD Method 40 and various environmental requirements.

APPLICATION / USES

- For use in areas where plumbing code calls for verification that a primer has been used.
- Removes surface dirt, grease and grime as well as softens the pipe surface to allow a fast, secure solvent weld.

PROPERTIES

VOC
Maximum VOC per SCAQMD 1168/316A or BAAQMD Method 40: 550 g/L

CHEMICAL PROPERTIES	
Appearance	Purple Liquid
Density	6.97 ± 0.2 lbs/gallon
Shelf Life	3 Years from Mfg. Date

PW-DWV-SW

ASTM F656, NSF Standard 61 for PW, DWV and Sewer Waste, IAPMO Listed

PRODUCT NUMBER	SIZE	DESCRIPTION	CTN. QTY
30755	4 oz.	Purple Primer	24
30756	8 oz.	Purple Primer	24
30757	16 oz.	Purple Primer	24
30758	32 oz.	Purple Primer	12
30759	Gallon	Purple Primer - Wide Mouth Can	6

PURPLE PRIMER – NSF LISTED TECHNICAL SPECIFICATION

DIRECTIONS

Store and use at temperatures between -15°F and 110°F. At temperatures outside of this range, special care must be taken to prepare good joints and prevent exposure to solvents. Stir or shake before using; if jelly-like, don't use. Do not thin.

Handle with care! Will stain most materials and surfaces.

1. Cut pipe ends square, chamfer and clean pipe ends.
2. Check dry fit of pipe and fitting. Pipe should easily go 1/3 of the way into the fitting. If pipe bottoms, it should be snug.
3. Use a suitable applicator at least 1/2 the size of the pipe diameter. For larger size pipe systems use a natural bristle brush or roller.
4. Apply thoroughly to inside of the fitting socket and to the outside surface of the pipe to the depth of the fitting. Apply a second coat of primer to fitting socket.
5. While primer is still wet use an appropriate solvent cement for the pipe being joined. Follow application instructions from cement can.

DO NOT TEST WITH AIR.

PRECAUTIONS

Read all information carefully before using this product.

DANGER!: CAUSES SERIOUS EYE IRRITATION. HARMFUL IF INHALED. MAY CAUSE DROWSINESS OR DIZZINESS. MAY CAUSE RESPIRATORY IRRITATION. REPEATED EXPOSURE MAY CAUSE SKIN DRYNESS OR CRACKING. Long term overexposure to solvents may cause damage to the brain, nervous system, reproductive system, respiratory system, mucous membranes, liver and kidneys. Contains a chemical classified by the US EPA as a suspected possible carcinogen. KEEP OUT OF REACH OF CHILDREN.

PRECAUTIONS: Avoid breathing vapors. Use only outdoors or in a well-ventilated area. Use explosion-proof electrical/ventilating equipment. Use only non-sparking tools. Take precautionary measures against static discharge. Wear a NIOSH-approved respirator for organic solvents. Keep away from heat/sparks/open flames/hot surfaces. No smoking. Vapors may accumulate in low places and may ignite explosively. Keep container tightly closed and cool. Wear protective gloves and eye protection. Wash thoroughly after handling. Do not eat or drink while using this product.

EMERGENCY/FIRST AID: CALL 1-877-740-5015 FOR INSTRUCTIONS.

IF SWALLOWED: Immediately call a POISON CENTER/doctor. Do NOT induce vomiting. Rinse mouth. This product may be aspirated into the lungs and cause chemical pneumonitis, a potentially fatal condition.

If IN EYES: Rinse cautiously with water for several minutes. Remove contact lenses, if present and easy to do. Continue rinsing. If eye irritation persists, get medical attention.

If ON SKIN: Rinse skin with water/shower. Take off immediately all contaminated clothing.

If INHALED: Remove person to fresh air and keep comfortable for breathing. Call POISON CENTER/doctor if you feel unwell. If medical advice is needed, have product container or label at hand.

FIRE: Use dry chemical, foam, or carbon dioxide extinguisher. Water spray may be applied to reduce potential vapors or for cooling. Burning liquid extinguished with water will _oat and may re-ignite on surface of water.

SPILLS: Remove all sources of ignition and ventilate area. Personnel cleaning up the spill should wear appropriate personal protective equipment, including respirators if vapor concentrations are high. Soak up spill with absorbent material. Put absorbent material in covered, labeled metal containers. Dispose of contents/ container in accordance with local regulations. Store in a well-ventilated space. Store locked up.

Technical Specification

Medium Gray PVC Cement

Description

- Medium-bodied gray cement for use on all schedules and classes of PVC pipe and fittings up to 6" diameter with interference fit.
- Lo-V.O.C. Solvent Cement meets California South Coast Air Quality Management District (SCAQMD) 1168/316A or BAAQMD Method 40 and various environmental requirements.
- Recommended for potable water, pressure pipe, conduit and DWV.
- Recommended application temperature 40°F to 110°F / 4°C to 43°C.
- Meets ASTM D2564.

Listings

NSF Standard 61 for PW, DWV and Sewer Waste

IAPMO Listed

Maximum VOC per SCAQMD 1168/316A or BAAQMD Method 40: **510 g/L**

INGREDIENTS (CAS Number)

Acetone (67-64-1), Amorphous Silica (112945-52-5), Cyclohexanone (108-94-4), Methyl Ethyl Ketone (78-93-3), PVC Resin (9002-86-2), Tetrahydrofuran (109-99-9)

MSDS Number: 1101E

Product Number	Size	Qty	Wgt	Product Number	Size	Qty	Wgt
30883	4 oz.	24	9 lbs.	308833	4 oz.	48	9 lbs.
30884	8 oz.	24	15 lbs.				
30885	16 oz.	24	29 lbs.				
30886	32 oz.	12	28 lbs.				
30887	Gallon	6	50 lbs.				

CHEMICAL PROPERTIES	
Appearance	Gray Liquid
Viscosity	Min. 500 cps @73° F ± 2° F
Density	7.74 ± 0.2 lbs/gallon
Shelf Life	3 years from manufacture date

PHYSICAL PROPERTIES	
Lap Shear Strength	(min. ASTM Standards)
2 hours	250 psi
16 hours	500 psi
72 hours	900 psi
Set Up Time	
30° F to 50° F	5 – 6 minutes
50° F to 70° F	3 – 4 minutes
70° F to 90° F	1 – 2 minutes

Precautions

Read all information carefully before using this product.

DANGER!: CAUSES SERIOUS EYE IRRITATION. HARMFUL IF INHALED. MAY CAUSE DROWSINESS OR DIZZINESS. MAY CAUSE RESPIRATORY IRRITATION. REPEATED EXPOSURE MAY CAUSE SKIN DRYNESS OR CRACKING. Long term overexposure to solvents may cause damage to the brain, nervous system, reproductive system, respiratory system, mucous membranes, liver and kidneys. Contains a chemical classified by the US EPA as a suspected possible carcinogen. KEEP OUT OF REACH OF CHILDREN.

PRECAUTIONS: Avoid breathing vapors. Use only outdoors or in a well-ventilated area. Use explosion-proof electrical/ventilating equipment. Use only non-sparking tools. Take precautionary measures against static discharge. Wear a NIOSH-approved respirator for organic solvents. Keep away from heat/sparks/open flames/hot surfaces. No smoking. Vapors may accumulate in low places and may ignite explosively. Keep container tightly closed and cool. Wear protective gloves and eye protection. Wash thoroughly after handling. Do not eat or drink while using this product.

EMERGENCY/FIRST AID: CALL 1-877-740-5015 FOR INSTRUCTIONS.
IF SWALLOWED: Immediately call a POISON CENTER/doctor. Do NOT induce vomiting. Rinse mouth. This product may be aspirated into the lungs and cause chemical pneumonitis, a potentially fatal condition. If IN EYES: Rinse cautiously with water for several minutes. Remove contact lenses, if present and easy to do. Continue rinsing. If eye irritation persists, get medical attention. If ON SKIN: Rinse skin with water/shower. Take off immediately all contaminated clothing. If INHALED: Remove person to fresh air and keep comfortable for breathing. Call POISON CENTER/doctor if you feel unwell. If medical advice is needed, have product container or label at hand. FIRE: Use dry chemical, foam, or carbon dioxide extinguisher. Water spray may be applied to reduce potential vapors or for cooling. Burning liquid extinguished with water will _oat and may re-ignite on surface of water. SPILLS: Remove all sources of ignition and ventilate area. Personnel cleaning up the spill should wear appropriate personal protective equipment, including respirators if vapor concentrations are high. Soak up spill with absorbent material. Put absorbent material in covered, labeled metal containers. Dispose of contents/ container in accordance with local regulations. Store in a well-ventilated space. Store locked up.

Directions for Use

Store and use at temperatures between 40°F and 110°F. At temperatures outside of this range, special care must be taken to prepare good joints and prevent exposure to solvents. Stir or shake before using; if jelly-like, don't use. Do not thin.

1. Cut pipe ends square, chamfer and clean pipe ends.
2. Check dry fit of pipe and fitting. Pipe should easily go 1/3 of the way into the fitting. If pipe bottoms, it should be snug.
3. Use a suitable applicator at least 1/2 the size of the pipe diameter. For larger size pipe systems use a natural bristle brush or roller.
4. Clean pipe and fitting with a listed primer.
5. Apply liberal coat of cement to pipe to the depth of the socket, leave no uncoated surface.
6. Apply a thin coat of cement to inside of fitting, avoid puddling of cement. Puddling can cause weakening and premature failure of pipe or fitting. Apply a second coat of cement to the pipe.
7. Assemble parts QUICKLY. Cement must be fluid. If cement surface has dried, recoat both parts.
8. Push pipe FULLY into fitting using a ¼ turning motion until pipe bottoms.
9. Hold pipe and fitting together for 30 seconds to prevent pipe push-out - longer at low temperatures. Wipe off excess.
10. Allow 15 minutes for good handling strength and 2 hours cure time at temperatures above 60°F before pressure testing up to 180 psi. Longer cure times may be required at temperatures below 60°F or with pipe above 3".

DO NOT TEST WITH AIR.

Revision Date: 3/15/2013

CHARLOTTE
PIPE AND FOUNDRY COMPANY®

SUBMITTAL FOR CHARLOTTE PIPE® HUBLESS CAST IRON SOIL PIPE AND FITTINGS

Date: _____

Job Name: _____ Location: _____

Engineer: _____ Contractor: _____

Scope:

This specification covers Hubless Cast Iron pipe, fittings, and couplings used in sanitary drain, waste and vent (DWV), sewer, and storm drainage applications. This system is intended for use in non-pressure applications.

Specification:

Hubless Cast Iron pipe and fittings shall be manufactured from gray cast iron and shall conform to ASTM A 888 and CISPI Standard 301. All pipe and fittings shall be marked with the collective trademark of the Cast Iron Soil Pipe Institute® and listed by NSF® International. Hubless Couplings shall conform to CISPI Standard 310, shall be manufactured in the United States, and be certified by NSF® International. Heavy Duty and Medium Duty couplings shall conform to ASTM C 1540, shall be manufactured in the United States, and shall be used if indicated.

Installation:

Installation shall comply with the latest installation instructions published by Charlotte Pipe and Foundry Company® and shall conform to all applicable plumbing, fire, and building code requirements. The system shall be hydrostatically tested after installation to 10 ft. of head (4.3 psi maximum). **WARNING!** Never test with or transport/store compressed air or gas in Cast Iron pipe or fittings. Doing so can result in explosive failures and cause severe injury or death.

Referenced Standards:

ASTM C 564:	Rubber Gaskets for Cast Iron Soil Pipe and Fittings
CISPI 301:	Hubless Cast Iron Soil Pipe and Fittings
CISPI 310:	Hubless Couplings for Cast Iron Soil Pipe and Fittings
ASTM C 1277:	Hubless Couplings
ASTM C 1540:	Hubless Medium Duty and Heavy Duty Couplings

MADE IN USA

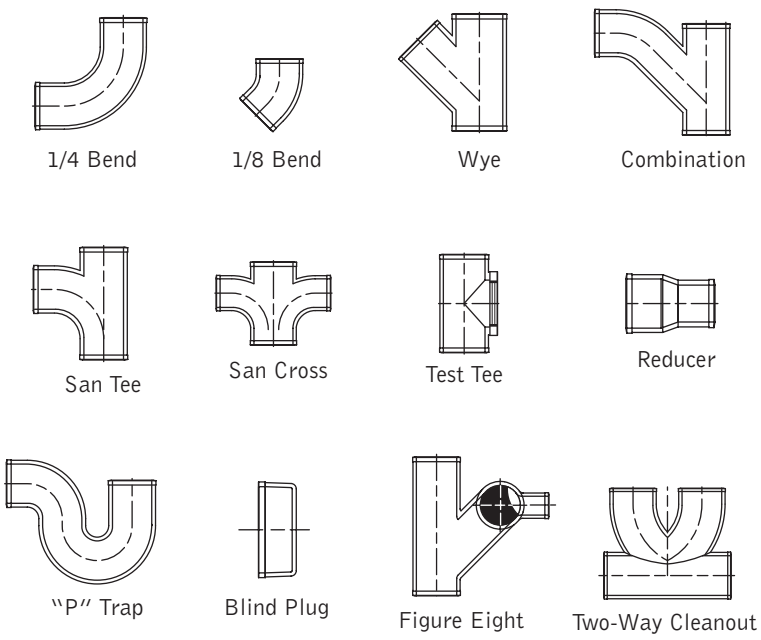

Not all fitting patterns shown

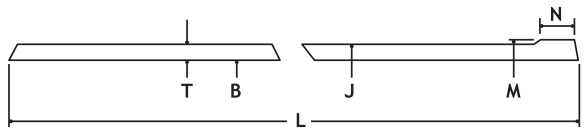

TABLE 1

DIMENSIONS AND TOLERANCES (IN INCHES) OF SPIGOTS AND BARRELS FOR NO-HUB PIPE AND FITTINGS

Size	Inside Barrel Diameter B	Outside Diameter Barrel J	Outside Diameter Spigot M	Width Spigot Bead N (± .13)	Thickness of Barrel T-Nom.	Thickness of Barrel T-Min.	Gasket Positioning Lug W
1½	1.50 ± .09	1.90 ± .06	1.96 ± .06	.25	.16	.13	1.13
2	1.96 ± .09	2.35 ± .09	2.41 ± .09	.25	.16	.13	1.13
3	2.96 ± .09	3.35 ± .09	3.41 ± .09	.25	.16	.13	1.13
4	3.94 ± .09	4.38 + .09 − .05	4.44 ± .09	.31	.19	.15	1.13
5	4.94 ± .09	5.30 + .09 − .05	5.36 ± .09	.31	.19	.15	1.50
6	5.94 ± .09	6.30 + .09 − .05	6.36 ± .09	.31	.19	.15	1.50
8	7.94 ± .13	8.38 ± .09	8.44 ± .09	.31	.23	.17	2.00
10	10.00 ± .13	10.56 ± .09	10.62 ± .09	.31	.28	.22	2.00
12	11.94 ± .09	12.50 ± .13	12.62 ± .13	.31	.28	.22	2.75
15	15.11 ± .09	15.83 ± .13	16.12 ± .13	.31	.36	.30	2.75

Note: *Charlotte Pipe does not recommend or warrant installations joined with unshielded hubless couplings.*

Charlotte Pipe and Foundry Company • P.O. Box 35430 Charlotte, NC 28235 • (800) 438-6091 • www.charlottepipe.com

Charlotte Pipe and Charlotte Pipe and Foundry Company are registered trademarks of Charlotte Pipe and Foundry Company.

FO-SUB-CI-NH (7-20-16)

SUBMITTAL
NO-HUB COUPLING

anaco

anaco • 1001 El Camino Ave., Corona, CA 92879 • (951) 372-2732

Certifications & Standards:

Tested & Certified to CISPI 310
Tested & Certified to ASTM C 1277
Tested & Certified to ASTM C 564
NSF™ Certified
IAPMO File 2206

NSF CERTIFIED BY NSF

100% Made in USA

Compliant to BAA, TAA, ARRA, and NAFTA

Material Specifications:

Clamp: Type 301 AISI stainless steel

Screw: Type 305 AISI stainless steel 5/16″ hex head for 1.5″-10″, 3/8″ head for 12″ and 15″.

Shield: Type 301 AISI stainless steel, corrugated. Shield thickness 0.0075

Gasket: The gasket shall be manufactured from a properly vulcanized virgin compound in which the primary elastomer is polychloroprene (neoprene) conforming to ASTM C 564. Oil Immersion test: 80% max. Volume Change after immersion in IRM 903 for 70 hours at 212° F.

No-Hub Couplings			
Size	Width	No. of Straps	Torque
1.5″– 4″	2.125	2	60
5″ & 6″	3.0	4	60
8″ & 10″	4.0	4	60
12″ & 15″	5.50	6	80

Anaco No-Hub couplings consist of a stainless steel shield, clamp assembly and a Neoprene gasket. The Anaco coupling is used to join hubless cast iron pipe and fittings made to CISPI 301 and/or ASTM A 888. Coupling sizes range from 1.5″ through 15″ diameters. The stainless steel shield and clamp assemblies are corrosion resistant.

Test	Physical Tests Min or Max Requirements	ASTM Method
Tensile Strength	1500 psi min.	D412
Elongation	250 min.	D412
Durometer [Shore A]	70 ± 5 @ 76° F ± 5° F	D2240
Accelerated Aging	15% maximum tensile and 20% maximum elongation deterioration, 10 points maximum increase in hardness, all determinations after oven aging for 96 hours at 158° F	D573
Compression Set	25% maximum after 22 hours at 158° F	D395 (Method B)
Oil Immersion	80% maximum volume change after immersion in IRM 903 for 70 hours at 212° F	D471
Ozone Cracking	No visible cracking at 2 times magnification of the gasket after 100 hours exposure in 1.5ppm ozone concentration at 100° F. Testing and inspection to be on gasket which is loop mounted to give approximately 20% elongation of outer surface.	D1149
Tear Resistance	150 lb minimum per inch of thickness	D625
Water Absorption	20% maximum by weight after 7 days at 158° F	D471

For Residential and Commercial Applications

Job Name _____ Contractor _____

Job Location _____ Approval _____

Engineer _____ Contractor's P.O. No. _____

Approval _____ Representative _____

LEAD FREE*

Series LF3002

Dielectric Unions

Sizes: ½" x ⅜" — 1" x ¾"

Series LF3002 dielectric unions feature a female iron pipe thread to reduced solder connection. These unions are designed to be installed between pipe made from dissimilar metals to prevent accelerated corrosion and deterioration in the piping system due to galvanic and stray current. The LF3002 features Lead Free* construction to comply with Lead Free* installation requirements.

LF3002

Features

- Female iron pipe thread to reduced solder connection
- Designed and manufactured to the highest quality standards
- Individually factory certified to withstand a minimum of 600 volts on a dry line with no flashover
- Rated to 180°F (82°C) at 250psi (17.2 bar)

Standards

Meet federal specifications for tensile strength and thread end connections

Pressure — Temperature

Maximum Pressure: 250psi (17.2 bar)

Maximum Temperature: 180°F (82°C)

Specifications

A dielectric union shall be installed where indicated on the plans. The union shall feature a female iron pipe thread to reduced solder connection. The dielectric union shall be constructed using Lead Free* materials. Lead Free* dielectric unions shall comply with state codes and standards, where applicable, requiring reduced lead content. The dielectric union shall be a Watts Series LF3002.

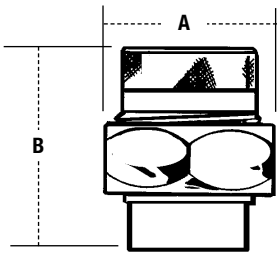

Materials — Dimensions — Weights

SIZE	MATERIALS					DIMENSIONS				WEIGHT	
	TAIL PIECE	ADAPTER †	NUT †	INSULATOR	GASKET	A		B			
in.						*in.*	*mm*	*in.*	*mm*	*oz.*	*gm*
½ x ⅜	Lead Free Brass	Steel	Steel	Polysulfone	Buna-N	1½	38	1⅞	48	5.8	164
¾ x ½	Lead Free Brass	Steel	Steel	Polysulfone	Buna-N	1⅝	41	1⅞	48	7.2	204
1 x ¾	Lead Free Brass	Steel	Steel	Polysulfone	Buna-N	2⅞	48	2½	64	10.1	286

† Steel adapter and nut are zinc plated

NOTICE

The information contained herein is not intended to replace the full product installation and safety information available or the experience of a trained product installer. You are required to thoroughly read all installation instructions and product safety information before beginning the installation of this product.

NOTICE

Inquire with governing authorities for local installation requirements

***The wetted surface of this product contacted by consumable water contains less than 0.25% of lead by weight.**

Watts product specifications in U.S. customary units and metric are approximate and are provided for reference only. For precise measurements, please contact Watts Technical Service. Watts reserves the right to change or modify product design, construction, specifications, or materials without prior notice and without incurring any obligation to make such changes and modifications on Watts products previously or subsequently sold.

WATTS®

USA: T: (978) 689-6066 • F: (978) 975-8350 • Watts.com
Canada: T: (905) 332-4090 • F: (905) 332-7068 • Watts.ca
Latin America: T: (52) 81-1001-8600 • Watts.com

© 2014 Watts

For Residential and Commercial Applications

Job Name _____ Contractor _____

Job Location _____ Approval _____

Engineer _____ Contractor's P.O. No. _____

Approval _____ Representative _____

LEAD FREE*

Series 3200

Dielectric Flanged Pipe Fittings

Sizes: 2" – 4"

Series 3200 Dielectric Flanged Pipe Fittings feature an iron pipe thread to iron pipe thread connection. These fittings are designed to be installed between pipe made from dissimilar metals to prevent accelerated corrosion and deterioration in the piping system due to galvanic and stray current.

3200

Features

- Iron pipe thread to iron pipe thread
- Designed and manufactured to the highest quality standards
- Rated to at 175psi (12.1 bar)

Pressure — Temperature

Maximum Pressure: 175psi (12.1 bar)

Maximum Temperature: 180°F (82°C)

Specifications

A dielectric fitting shall be installed where indicated on the plans. The fitting shall feature an iron pipe thread to iron pipe thread. The fitting shall be a Watts Series 3200.

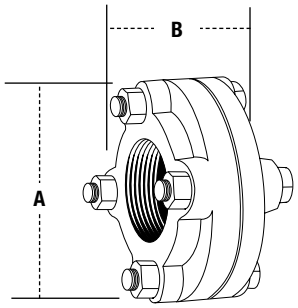

Materials — Dimensions — Weights

SIZE	MATERIALS					DIMENSIONS				WEIGHT	
	TAIL PIECE	ADAPTER †	BOLT & NUTS †	INSULATOR	GASKET	A		B			
in.						*in.*	*mm*	*in.*	*mm*	*oz.*	*gm.*
2	Gray Cast Iron	Gray Cast Iron	Steel	Polysulfone	Buna-N	5⅛	130	2⅛	54	8	3.6
2½	Gray Cast Iron	Gray Cast Iron	Steel	Polysulfone	Buna-N	5⅞	149	2¾	70	12	5.4
3	Gray Cast Iron	Gray Cast Iron	Steel	Polysulfone	Buna-N	6¾	171	2¾	70	15	6.8
4	Gray Cast Iron	Gray Cast Iron	Steel	Polysulfone	Buna-N	9⅛	232	3	76	31	14.1

† Gray cast iron and steel components are zinc plated

***The wetted surface of this product contacted by consumable water contains less than 0.25% of lead by weight.**

Watts product specifications in U.S. customary units and metric are approximate and are provided for reference only. For precise measurements, please contact Watts Technical Service. Watts reserves the right to change or modify product design, construction, specifications, or materials without prior notice and without incurring any obligation to make such changes and modifications on Watts products previously or subsequently sold.

ISO 9001-2008 CERTIFIED

U.S. GREEN BUILDING COUNCIL MEMBER

WATTS®

A Watts Water Technologies Company

USA: Tel: (978) 688-1811 • Fax: (978) 794-1848 • www.watts.com
Canada: Tel: (905) 332-4090 • Fax: (905) 332-7068 • www.watts.ca

© 2013 Watts

ADVANCE
PRODUCTS & SYSTEMS, LLC

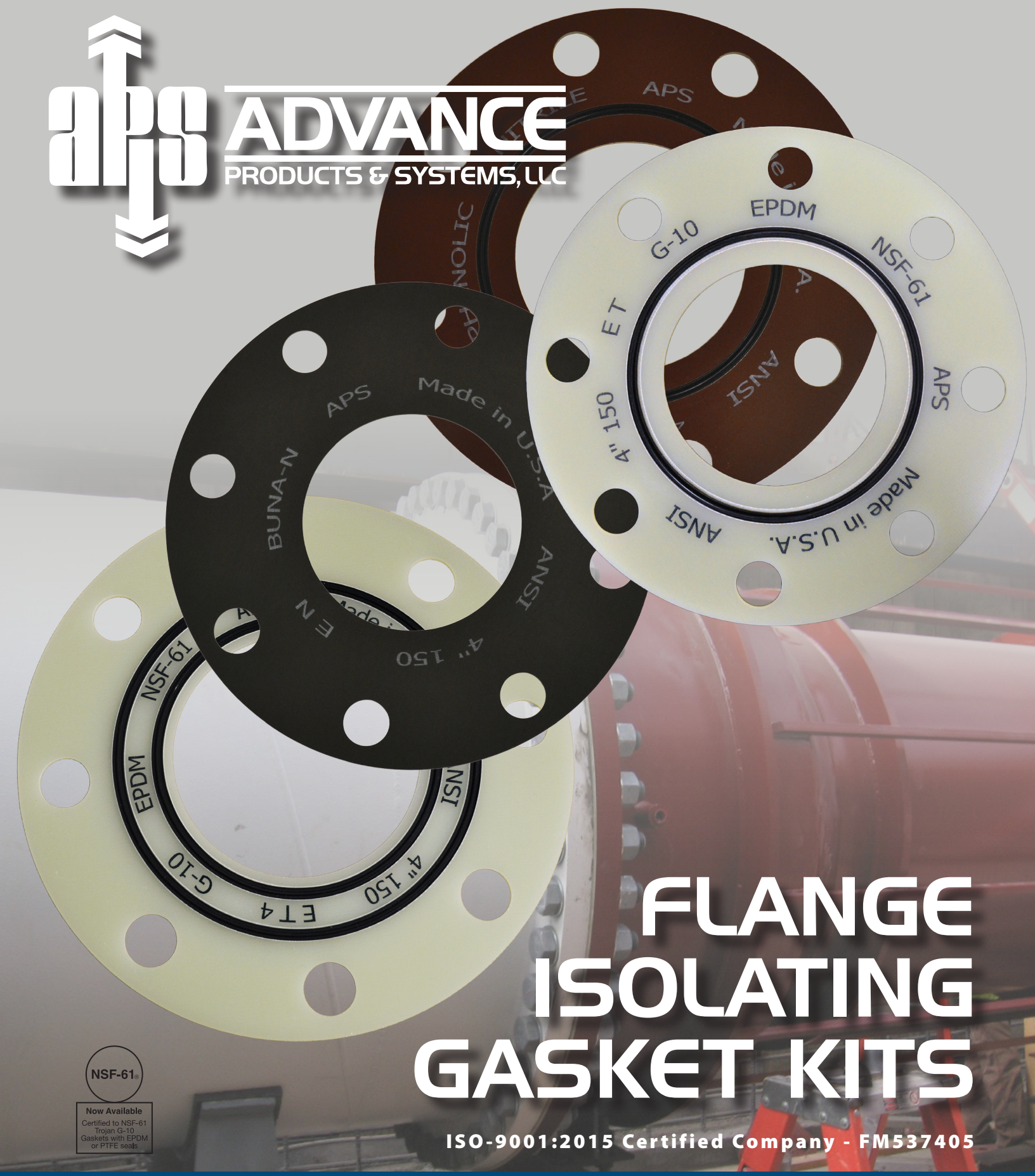

FLANGE ISOLATING GASKET KITS

NSF-61®

Now Available
Certified to NSF-61
Trojan G-10
Gaskets with EPDM
or PTFE seals

ISO-9001:2015 Certified Company - FM537405

FLANGE ISOLATING GASKET KITS

Introduction

With the economic and environmental climate of today, it is more important than ever to prevent leakage in your carrier system. Flanges, the most common trouble area, need to be sealed properly to prevent this leakage and must also be cathodically isolated to prevent stray currents which cause undo corrosion and eventual break down of the metal.

Advance Products & Systems manufactures and maintains a supply of quality products and materials which can help solve most flange sealing problems from eliminating leakage to preventing corrosion, and saving the integrity of the pipeline.

Double Isolation Set

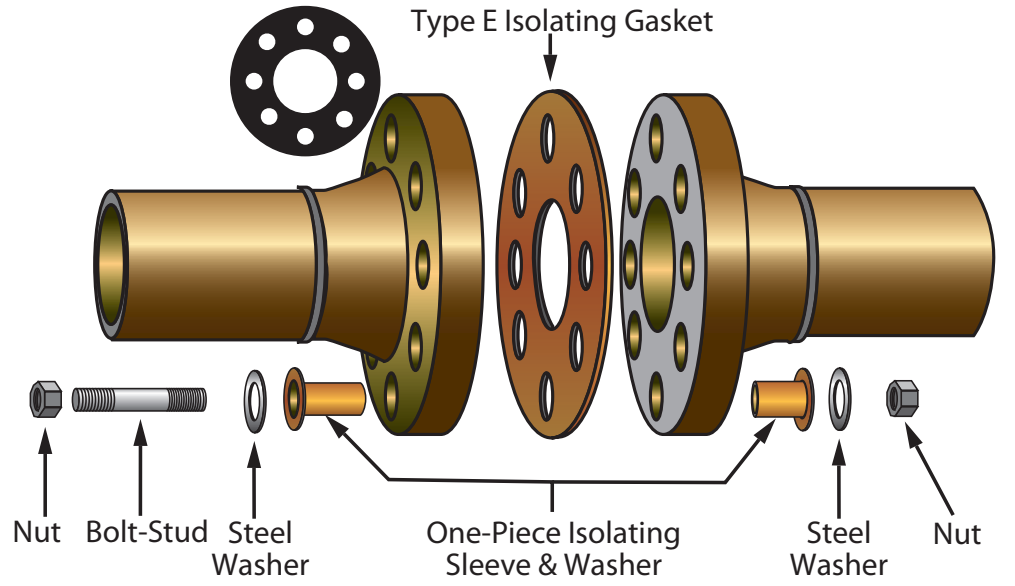

Single Isolation Set

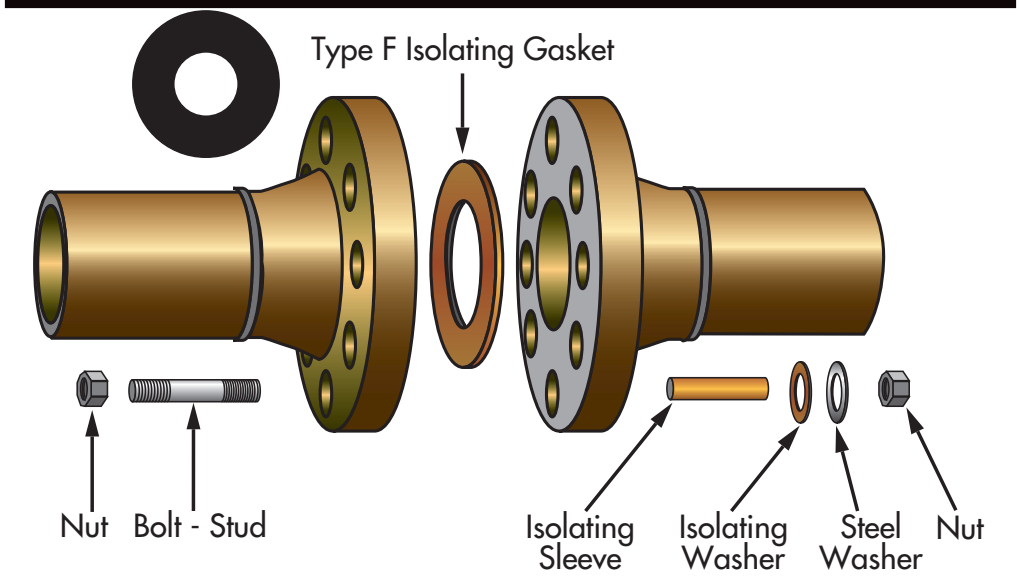

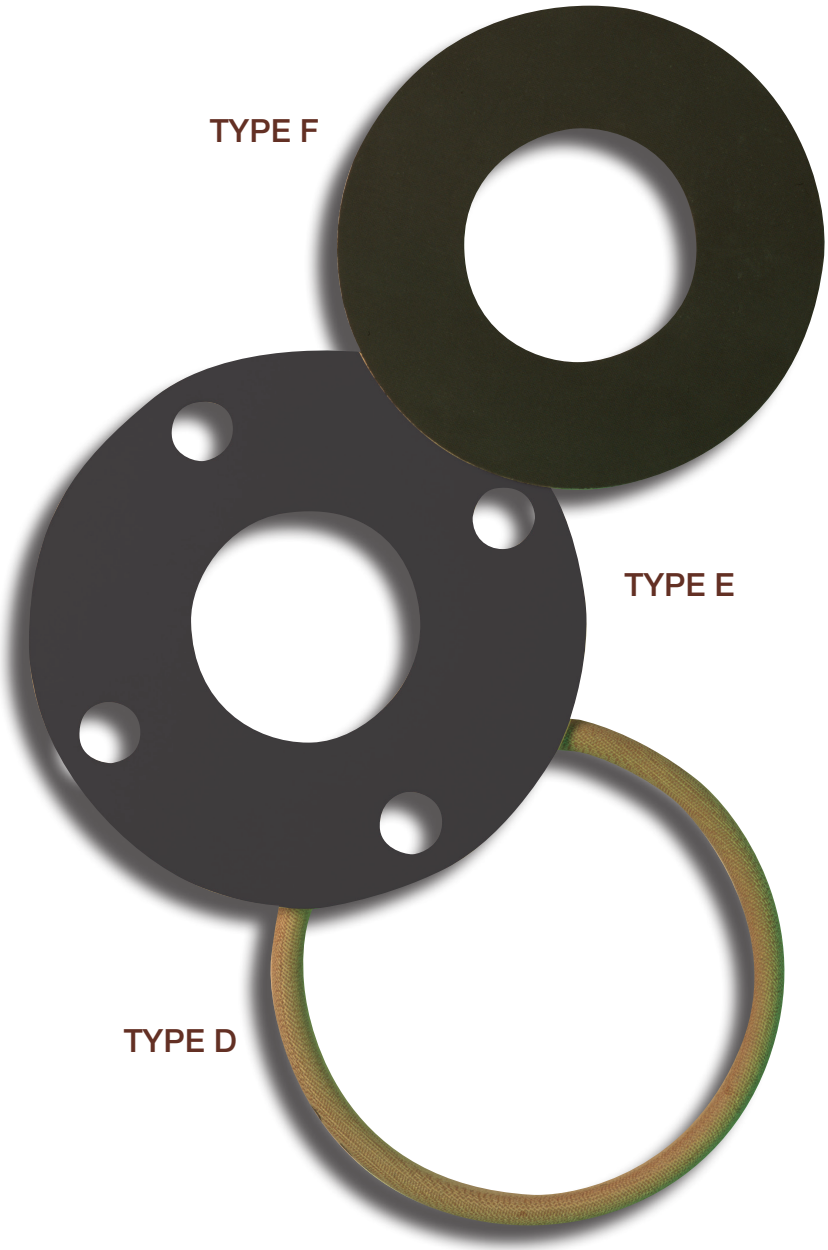

Type F

Type F gaskets are made to fit the raised face portion of the flange only. As there are no bolt holes in the F gasket, the inside diameter of the bolt hole circle is slightly smaller than the outside diameter of the gasket, assuring an exact, automatic positioning of the gasket. Type F gaskets are available in the same materials as the type E gasket.
Standard thickness of 1/8".

Type E

Type E is a full-faced gasket with the same outside diameter as the flange and precision cut bolt holes. This design facilitates proper alignment of the gasket during installation and prevents foreign material from shorting the flange isolation. Type E gaskets are available in plain-faced or Nitrile® faced phenolic, as well as a variety of high temperature materials.
Standard thickness of 1/8".

Type D

Type D gaskets are specifically designed to fit into the ring groove of ring-type-joint flanges. They are manufactured of medium weave, fabric-reinforced phenolic material and are sized to ANSI and API specifications. Type D gaskets are available in basic oval as well as octagonal shape. Also available are BX gaskets with pressure ratings to 15,000 PSI.
Made to API specifications.

Advance Flange Isolation Gasket Kits are manufactured according to ANSI B16.5 specifications up to 24". Above 24", please provide the specifications of your flange using our convenient worksheet. Technical assistance is available upon request.

Types of Retainers

Retainer	Water Absorption	Tensile Strength	Compression Strength	Dielectric Values	Max Continuous Operating Temperature		Flexural Strength
CE	2.00	11,000	34,000	550	257 °F	125 °C	17,500
G-3	2	42,000	76,000	375	347 °F	175 °C	55,000
G-7	0.19	25,000	40,000	350	428 °F	220 °C	18,500
G-10	0.10	51,000	66,000	800	302 °F	150 °C	65,000
G-11	0.08	43,000	58,000	550	400 °F	205 °C	58,000
XPN	1.50	18,000	45,000	600	266 °F	130 °C	29,000
XP	1.50	18,000	45,000	600	266 °F	130 °C	29,000

THE TROJAN

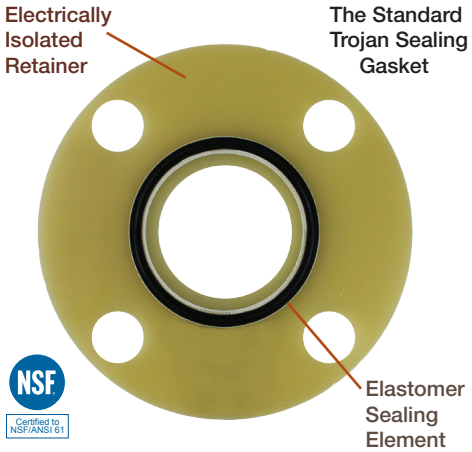

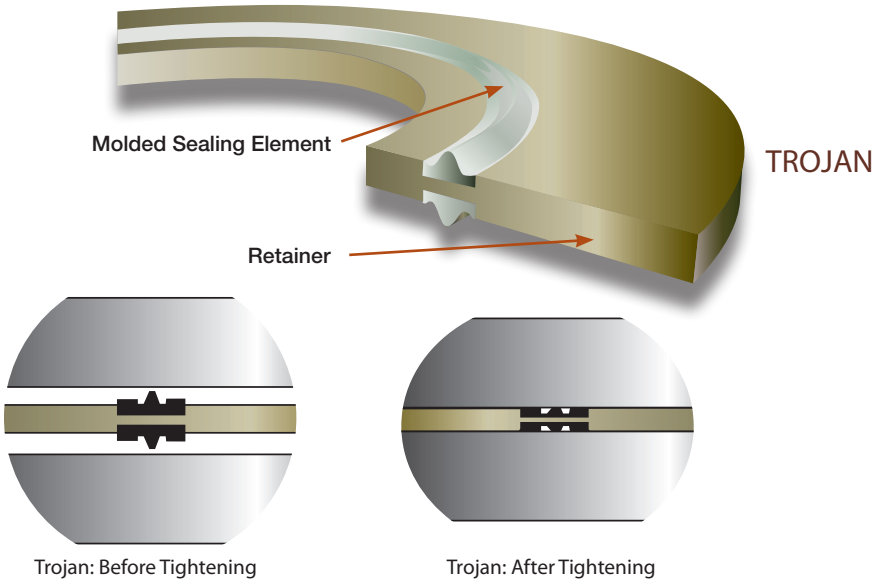

TROJAN SEALING GASKETS

For near-zero-leakage static sealing, the Trojan gasket is a must. The elastomer sealing element is encapsulated in the electrically isolated retainer. Our most popular sealing element materials are Nitrile® (-60°/240 °F min./max. operating temperature), Viton® (-75°/400 °F), and PTFE (-425°/450 °F). The encapsulation of the sealing element permits only micro-exposure of the seal to hostile environments, chemicals and corrosive fluids.

The controlled confinement of the elastomer sealing ring within the retainer allows the availability of a 92% to 94% filled volume groove. A consistent controlled pressure seal can always be obtained without tremendous bolt loads. Reduced loads allow for reduced flange thickness with smaller circles and smaller bolt holes.

The cross section of APS' Trojan Sealing Gasket (A) shows the elastomer sealing element as it appears before compression between flanges. This compression causes the seal to effectively fill the void of the groove and encapsulate, (B) permitting only micro-exposure of the actual seal to hostile elements either from within or without.

All too often, difficult sealing situations arise from mismatched or misaligned flanges. A quick, cost effective solution is the APS Trojan and Trojan II. Also used in place of damaged or missing RTJ gaskets, the Trojan series forms a quick, static seal and is often the reasonable alternative to flange replacement.

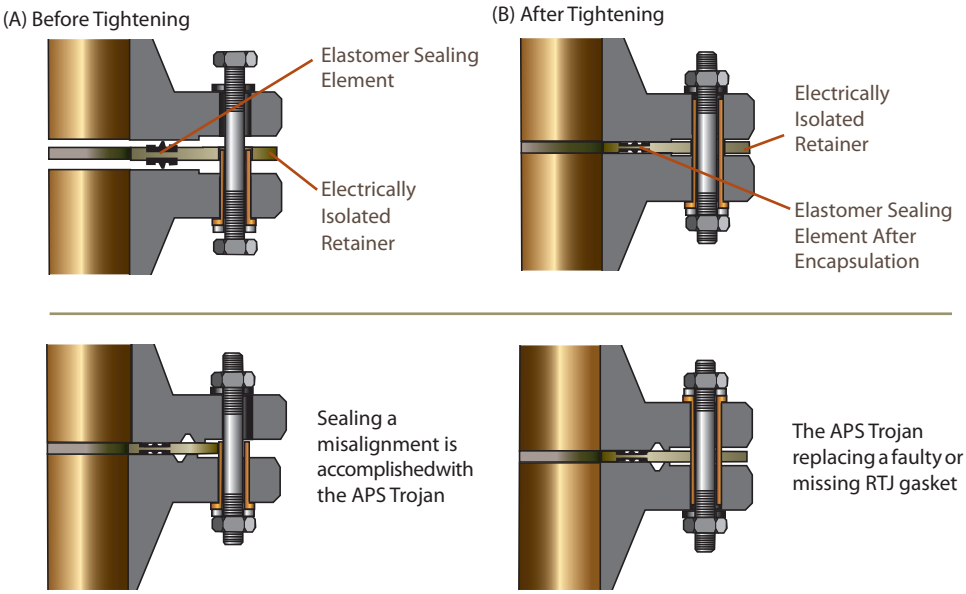

Available Sealing Element Materials

SEALING ELEMENTS				
SEAL MATERIALS	MIN OPERATING TEMPERATURE		MAX OPERATING TEMPERATURE	
	°F	°C	°F	°C
NITRILE	-60	-51.11	240	115.555
VITON	-75	-59.44	400	204.44
EPDM	-40	-40	250	121.11
PTFE	-425	-253.89	450	232.22

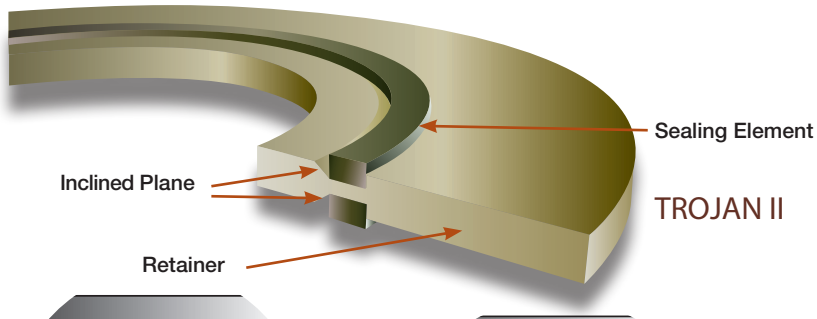

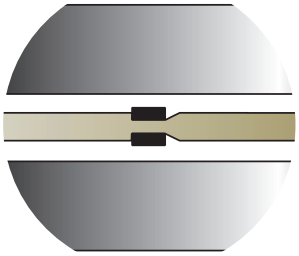

Trojan II: Before Tightening

Trojan II: After Tightening

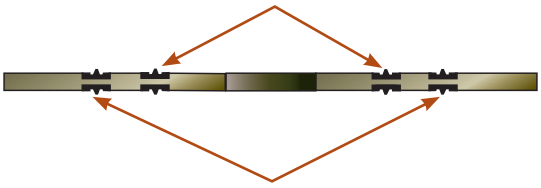

Cross Section Of The
Duplex Seal Trojan Sealing Gasket

(A) Before Tightening

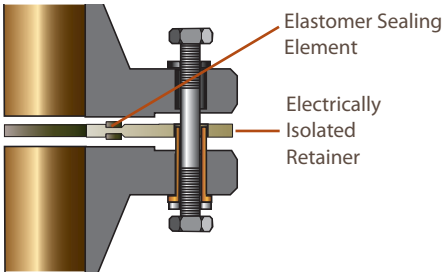

(B) After Tightening

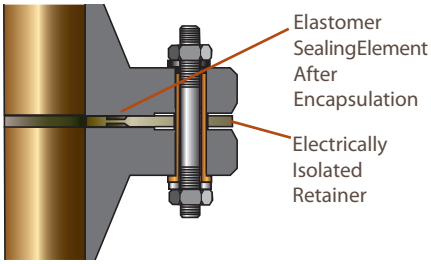

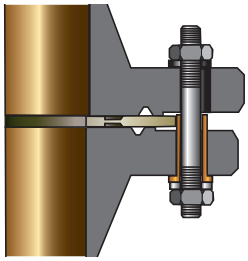

Sealing a misalignment
is accomplished with the
APS Trojan II

DUPLEX SEAL TROJAN

Four seals on the new Duplex Seal Trojan further ensure the integrity of the sealing capability of an already proven reliable gasket. For areas where absolute zero leakage is a must, the Duplex Seal Trojan works twice as hard.

WHY A DUPLEX SEAL?

The use of duplex seals on gaskets is primarily for two reasons: one, in the case that flange faces are slightly out of tolerance, the secondary seal will increase the chances of a successful seal. Two, the duplex seals can help in the circumstance of a seal groove (present) or a change of ID dimension of the two elements being connected. In the case that one of the sealing elements is not being compressed, the other one will be sufficient to accomplish a complete seal between flanges (as it did on past applications where dual seals were not standard practice).

ADVANTAGES OF THE TROJAN & TROJAN II

- Can be utilized with mismatched flanges
- Can be utilized with misaligned flanges
- Can be used in place of RTJ rings
- Little initial torque required
- No re-torquing required
- Sealing ring cannot be left out
- Reusable
- Seal design tested for high pressures. Please consult factory for specific pressures
- Competitive price
- Limited area of seal exposed
- Compensates for pressure fluctuations, compression changes, vibrations, temperature, etc.
- Greatly reduces human error during installation
- Large selection of materials available
- Three to four times the dielectric strength necessary
- Low installation and maintenance costs
- Gaskets through 144”

ISOLATING SLEEVES & WASHERS • FLANGE PROTECTORS

ISOLATING SLEEVES AND WASHERS

Isolating sleeves manufactured in various materials and sizes, with standard 1/32" wall thickness, are available to meet every customer's needs. Also available are one-piece integral sleeves and washers which are made of Minlon, providing superior compression strength. Integral sleeves are available in sizes through 1-1/2". A variety of high temperature sleeves are also stock items.

With each isolating washer, an S.A.E. electroplated steel washer is provided to protect the isolating washer from damage by the nut. Advance flange isolation sets are available in single or double washer kits.

KLEERBAND® FLANGE PROTECTORS

An additional high level of corrosion protection can be attained with the use of Kleerband® flange protectors, stainless steel flange protectors and Radolid® protection caps.

Flange protectors and corrosion inhibitor grease are recommended on all isolated flanges. By encapsulating the flange cavity with the flange protector and injecting our corrosion inhibitor grease, you can rely on your cathodic protection system to provide you with years of trouble free service.

This system totally eliminates any possibility of foreign material lodging between the faces of your flange or corrosion bridging across and creating a short.

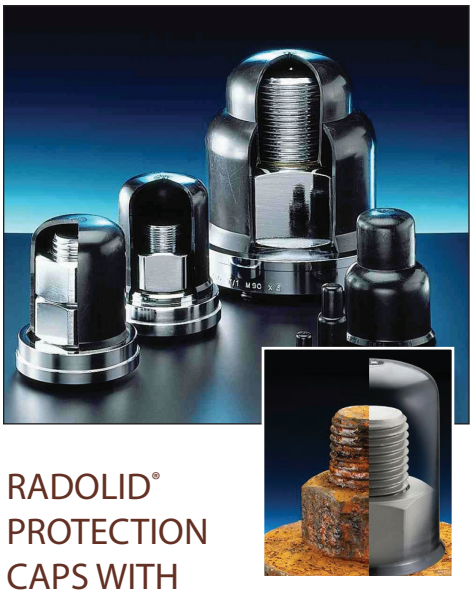

RADOLID® PROTECTION CAPS WITH VCI*

Radolid® protection caps from APS protect nuts and bolts from destructive corrosion. Caps are easily pressed onto the bolted joints by hand, snapping into place when in position. We recommend loading caps with APS' Kleergel®, a high-melt corrosion inhibitor grease, for added protection.

*Volatile Corrosion Inhibitors

Isolating Material

MATERIAL	DIELECTRIC STRENGTH VOLTS/MIL	WATER ABSORPTION %	MAX CONTINUOUS OPERATING TEMPERATURE	
Mylar	4,000	.8	300 ° F	149 ° C
Minlon	1,200	.22	250 ° F	121 ° C
Nomex	500	-	450 ° F	232 ° C
G-10	800	.10	302 ° F	150 ° C
G-3	375	2	347 ° F	175 ° C
G-7	350	.19	428 ° F	220 ° C
G-11	550	.08	400 ° F	205 ° C

HIGH TEMPERATURE PRODUCTS

GASKETS: NEMA grades G-3, G-7, G-10, G-11, Durabla and Durlon

SLEEVES: Nomex, NEMA grades G-7 and G-10, Durabla, Durlon

WASHERS: NEMA grades G-7 and G-10, Durabla, Durlon

Other high temperature materials are available upon request. It is recommended that the factory be contacted to discuss technical data on the above referenced products.

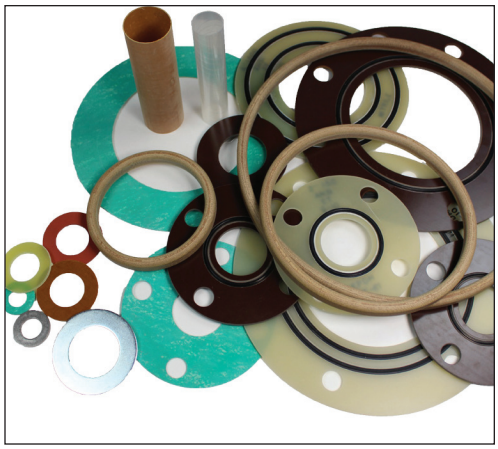

SPECIAL APPLICATION

Advance Products and Systems, LLC is well equipped to make those special isolation pads and gaskets sometimes required for odd shaped connections. We can manufacture any configuration or design needed.

These applications include special closures, vaults, steel boxes, special connectors and utility and light poles.

If it needs to be sealed, we can be of service.

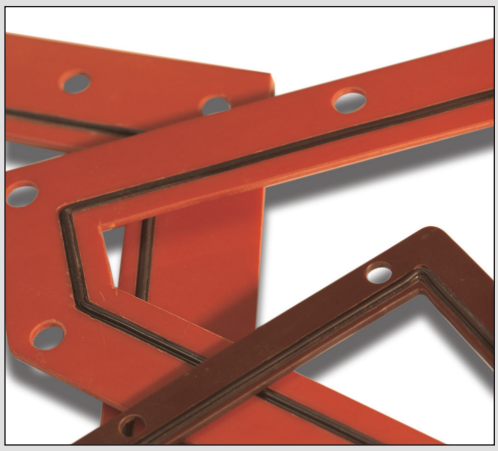

PACKAGING

Each Advance flange isolation gasket kit is packaged individually in durable corrugated boxes. Isolating sleeves and washers are packaged separately and are cushioned within the box to protect them from damage during shipment. Each set is clearly tagged with flange size, pressure rating, type of isolating sleeve and whether it is a single washer or double washer set. A recommended bolt tightening sequence is provided with each kit.

TO ORDER PLEASE SPECIFY THE FOLLOWING

- Gasket Type D, E or F
- Flange Size and Pressure Rating
- Single Washer or Double Washer Sets (SW or DW)
- Sleeve Material
- Retainer Material
- Sealing Element (Nitrile®, Viton® or PTFE)

OTHER QUALITY PRODUCTS AVAILABLE FROM ADVANCE PRODUCTS & SYSTEMS, LLC

- Flange Band Protectors - Stainless Steel & Kleerband®
- Radolid® Nut & Bolt Protector Caps
- Casing Spacers and End Seals
- Specialty Products Manufactured of Phenolic and other materials
- Innerlynx® - Wall/Pipe Penetration Seals & Wall Sleeves
- Isojoint® - Monolithic Isolating Joints
- Foreman Nite Caps
- Duocon® Centralizers
- Safety Spray Shields
- UBolt-Cote®

ADVANCE
PRODUCTS & SYSTEMS, LLC

P. O. Box 60399 • Lafayette, Louisiana 70596-0399
800-315-6009 • 337-233-6116 • FAX: 337-232-3860
Email: sales@apsonline.com • Website: www.apsonline.com

bsi. ISO 9001:2015 Quality Management

CLASSIFIED C UL US

BBB ACCREDITED BUSINESS

Made in USA

Distributed by:

Advance Products & Systems, LLC is not responsible for errors printed in this brochure.

Advance Products & Systems, LLC shall repair or replace (within the limitations of such applicable express written warranty as may be issued by it) any product or portions thereof, which prove to be defective in workmanship or material for a period of 12 months from shipment date. The foregoing in lieu of all warranties, express or implied, and all other obligations or liabilities on the part of APS, on account of the product which it may sell. In no event shall APS be liable for consequential or special damages: nor except as it may otherwise specifically agree in writing, installation, or other work which may be done upon or in connection with the product by APS/ the distribution / dealer or others. THE LIMITED WARRANTIES PROVIDED IN THIS AGREEMENT AND THE OBLIGATIONS AND LIABILITIES OF APS ARE THE ONLY WARRANTIES MADE BY APS AS TO THE PRODUCT. APS MAKES NO EXPRESS OR OTHER IMPLIED WARRANTIES, BY COURSE OF DEALING, USAGE OF TRADE, MERCHANTABILITY, FITNESS FOR A PARTICULAR USE (WHETHER GENERAL OR SPECIFIC), OR OTHERWISE.

Rev. 062518

Precision Plumbing Products

"Specify with Confidence - Install with Pride"®

LEAD FREE

ClearFlow®

www.pppinc.net

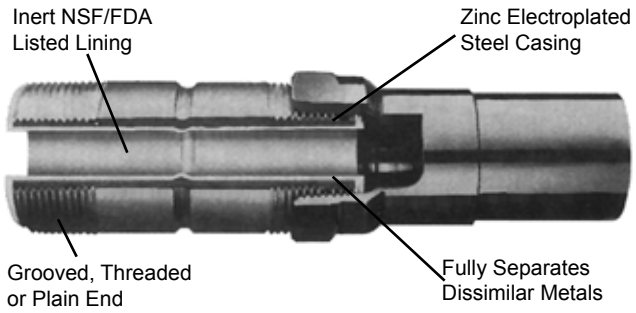

Dimensions:						
Part No.	Pipe Inches(mm)		Max.Wk. Press. PSI (kpa)	Dimen. End to End Inches(mm)	Units Per Box	Approx. Wgt.Each Lbs. (kg)
	Nom. Size	Actual Size				
Threaded x Threaded						
19100P	1/2 (15)	0.840 (16,7)	300 (2065)	3 (76)	25	0.2 (0,1)
19125P	3/4 (20)	1.050 (26,9)	300 (2065)	3 (76)	25	0.2 (0,1)
19145P	1 (25)	1.315 (33,4)	300 (2065)	4 (102)	25	0.3 (0,3)
19155P	1 1/4 (32)	1.660 (42,4)	300 (2065)	4 (102)	10	0.3 (0,3)
19165P	1 1/2 (40)	1.900 (48,3)	300 (2065)	4 (102)	10	0.8 (0,3)
19175P	2 (50)	2.375 (60,3)	300 (2065)	4 (102)	10	1.0 (0,5)
19180P	2 1/2 (60)	2.875 (73,0)	300 (2065)	6 (152)	6	1.6 (0,7)
19185P	3 (80)	3.500 (88,9)	300 (2065)	6 (152)	6	2.0 (0,9)
19195P	4 (100)	4.500 (114,3)	300 (2065)	6 (152)	6	4.5 (2,0)
Grooved x Threaded						
19146P	1 (25)	1.315 (33,4)	300 (2065)	4 (102)	25	0.3 (0,2)
19156P	1 1/4 (32)	1.660 (42,4)	300 (2065)	4 (102)	10	0.6 (0,3)
19166P	1 1/2 (40)	1.900 (48,3)	300 (2065)	4 (102)	10	0.8 (0,3)
19176P	2 (50)	2.375 (60,3)	300 (2065)	4 (102)	10	1.0 (0,5)
19181P	2 1/2 (65)	2.875 (73,0)	300 (2065)	6 (152)	6	1.6 (0,7)
19186P	3 (80)	3.500 (88,9)	300 (2065)	6 (152)	6	2.0 (0,9)
19196P	4 (100)	4.500 (114,3)	300 (2065)	6 (152)	6	4.5 (2,0)

NEW

Grooved x Grooved						
19200P	2 (50)	2.375 (60,3)	300 (2065)	4 (102)	25	1.0 (0,5)
19201P	2 1/2 (65)	2.875 (73,0)	300 (2065)	6 (152)	6	1.6 (0,7)
19202P	3 (80)	3.500 (88,9)	300 (2065)	6 (152)	6	2.0 (0,9)
19203P	4 (100)	4.500 (114,3)	300 (2065)	6 (152)	6	4.5 (2,0)

ClearFlow® fittings protect your plumbing system through an exclusive steel-to-plastic design that establishes an effective dielectric waterway. The ClearFlow® line of dielectric fittings separates dissimilar metals in the electrolyte (waterway) eliminating the local galvanic cell. In addition, ClearFlow's® metal-to-metal joint design maintains external electrical continuity, thereby preventing stray current corrosion. This feature becomes critical when stray current is present due to intentional or non-intentional grounding of direct current (DC) sources, e.g. phone systems and appliances. ClearFlow® fittings are designed to meet the requirements of ASTM standard F1545 for continuous use at temperatures up to +225°F (- +5°F) and for pressures up to 300psi, and will achieve a dielectric waterway in all potable water and appropriate HVAC applications. ClearFlow® is listed by IAPMO/UPC and SBCCI PST & ESI. Test results comparing ClearFlow® fittings with several other connections are provided on the opposite side.

elster Perfection

LISTED SBCCI PST&ESI

UPC

Made in the U.S.A. We do not export jobs

ISO 14001 AMERICAN GLOBAL STANDARDS CERTIFIED-GREEN

ISO 9001 AMERICAN GLOBAL STANDARDS CERTIFIED

ClearFlow® DIELECTRIC WATERWAY FITTINGS

Test results:
A test was conducted by Pittsburgh testing Laboratory to determine a ClearFlow® fitting's ability to reduce the current flow that causes internal corrosion in a waterway system. This current flow exists when dissimilar metals are exposed to an electrolyte (water) and is directly proportional to the rate at which corrosion occurs. The test fittings were installed between a piece of copper tubing and galvanized steel pipe. The current flow across these fittings was measured and recorded.

Fittings tested:
Sample #1 ¾"x3" ClearFlow® connector Part No. 19125
Sample #2 ¾"x 3" galvanized pipe nipple
Sample #3 ¾" insulated dielectric union
Sample #4 ¾" x 2" insulated coupling

Four test samples:
Sample #1 A 12" section of copper tubing was connected to a copper sweat ¾" NPT adapter, Plexiglas test insulator, galvanized coupling, a ¾"x 3" ClearFlow® Connector, and a 12" section of galvanized steel pipe.
Sample #2 A 12" section of copper tubing was connected to a copper sweat ¾" NPT adapter, Plexiglas test insulator, galvanized coupling, a ¾"x 3" ClearFlow® Connector, and a 12" section of galvanized steel pipe.
Sample #3 A 12" section of copper tubing was connected to a ¾" insulated dielectric union and a 12" section of galvanized pipe.
Sample #4 A 12" section of copper tubing was connected to a ¾"x 2" insulated coupling and a 12" section of galvanized pipe.
The test equipment used was a Micronta digital multimeter, #22-191 that is sensitivity rated at 20,000 VDC.

Test procedures:
After each test sample was assembled, a plastic cap was installed on the copper tubing. Each sample was filled with 70°F tap water. One lead of the multimeter was connected to the copper tubing. The other lead was connected to the galvanized pipe. A current reading was taken for each sample.

The results:
Sample #1 (ClearFlow® Dielectric Waterway Connectors): 0.066 ma
Sample #2 (Galvanized Pipe Nipple): 0.345 ma
Sample #3 (Insulated Dielectric Union): 0.441 ma
Sample #4 (Insulated Coupling): 0.209 ma

NOTE: Certified results of these tests are available upon request.

Test data/results and listings:
The facts and test data reported herein have been certified by Pittsburgh Testing Laboratory and collected by Elster Perfection Corporation engineers in our own laboratories. Similar testing on ClearFlow® type fittings have been certified by Heron Testing Labs, Inc. Also, the corrosion protection effects of ClearFlow® type fittings have been proved in tens of millions of water heaters. We have been supplying these fittings world wide to water heater manufacturers for more than 20 years. Variations of ClearFlow® fittings are used in appliances listed by the following agencies: The American Gas Association (A.G.A.) Laboratories; Underwriters Laboratories (U.L.); and The Canadian Gas Association (C.G.A.).

Evaluation Report No.9318

Precision Plumbing Products
Division of JL Industries, Inc.

802 SE 199th Ave
Portland, Oregon 97233

T (503) 256-4010
F (503) 253-8165

www.pppinc.net

Traditional Polyethylene Encasement

In areas where severely aggressive soils are encountered, the use of a polyethylene tube or sheet encasement has been proven to provide highly effective, economical protection. The protection against corrosion provided by loose polyethylene is different in several ways and should not be confused with coatings applied directly to the barrel of the pipe. The most significant difference is its ability to protect without creation of concentration cells at holidays. Also, since the encasement is applied when the pipe is actually put in the ground, coating damage due to shipping, handling, etc., is minimized.

As water may be present in the soil around the pipe, water may also be present between the pipe and wrap. Water inside the polyethylene tubing initially bears some characteristics of the soil environment, and corrosion may start. But within a short period of time initial oxidation depletes the oxygen supply in the water, and other electrochemical corrosion reactions also progress to completion. At this point a state of chemical equilibrium is reached.

Since the first field installation of polyethylene wrap on gray iron pipe in 1958, installations have been made in severely corrosive soils throughout the United States. The success of the polyethylene encasement procedure developed in the United States has been adopted by several other countries, and an International Standard for Polyethylene Sleeving (ISO- 8180) has been developed.

Research by the Ductile Iron Pipe Research Association at several severely corrosive test sites has verified that polyethylene encasement provides a high degree of protection and results in minimal and generally insignificant exterior surface corrosion of either ductile or gray iron pipe thus protected. These findings have been confirmed by the results of numerous investigations of field installations.

Field tests have also indicated that the dielectric capability of polyethylene provides shielding for ductile and gray iron pipe against stray current at most levels encountered in the field.

Because polyethylene encasement is a passive method of protecting ductile iron pipe in aggressive soils, it can effect greater reliability and savings than cathodic protection systems which require continual monitoring, maintenance and other operating expenses, and trained personnel. Cathodic protection systems can also cause collateral harm in some cases to nearby unprotected ferrous structures.

For protection in areas of severely aggressive soils, AWWA C105 covers materials and installation procedures for polyethylene encasement of underground installations of ductile iron piping for water and other liquids.

Polyethylene wrap in tube or sheet form for piping encasement is manufactured of virgin polyethylene material conforming to the requirements of ANSI/ASTM Standard Specification D1248. The specified minimum thickness for linear low-density polyethylene film is 0.008 in. (8 mils). The specified minimum thickness for high-density, cross-laminated polyethylene film is 0.004 in. (4 mils).

Material, required markings, and installation methods are all in accordance with the requirements of AWWA C105. This standard and more detailed publications by DIPRA regarding loose polyethylene encasement are available from AMERICAN.

Traditional Polyethylene Tubing and Tape
ANSI/AWWA C105/A21.5

Tubing in Roll

Table No. 11-3

Pipe Size in.	Flat Tube† Min. Width in.	Approximate Weight in Pounds 8 mil low-density P.E.		Approx. weight (lb.) per 500' roll 4 mil high-density cross-laminated P.E.	Tape Required* Per Joint ft.
		Per 1000' of Tube	Per 22' Long Individual Tube		
4	14	89	2	21	5
6	16	102	3	24	6
8	20	128	3	30	8
0	24	154	4	36	9
12	27	173	4	40	10
14	30	192	5	45	11
16	34	218	5	51	12
18	37	237	6	55	13
20	41	262	6	61	15
24	54	346	8	80	17
30	67	429	10	100	21
36	81	518	12	120	25
42	81	518	12	120	28
48	95	608	14	141	32
54	108	689	16	161	35
60	108	689	16	161	36
64	121	772	18	180	39

*Based on one turn at each end, six 4"–long strips to secure loose wrap plus approximately 5% extra.
†Flat tube widths are shown for Fastite, Flex–Ring, Lok–Ring, and MJ Joints. Check AMERICAN for Flat tube widths required for Flex–Lok Joints.
The standard color for low–density polyethylene is black. It can also be furnished white, green, red, buff, royal blue, and lavender on special order. The standard color for high–density, cross–laminated polyethylene is white. It can also be furnished black on special order.

Installation of Polyethylene Encasement

Installment methods as set forth in ANSI/AWWA C105/A21.5 and DIPRA's "Polyethelyne Encasement" brochure should be followed.

Gmail

Rolando Ayala <rolando@bstone.biz>

Pharr FY16 DAP - Submittal #18 (Sanitary Waste Piping and Vents)

David Cornelison - 7PCB <david.cornelison@gsa.gov> Thu, Apr 17, 2025 at 11:58 AM
To: Rolando Ayala <rolando@bstone.biz>
Cc: Maria Rangel <maria.rangel@pharr-tx.gov>, Jose Pequeno <josep@dwilsonconstruction.com>, Edwin Manrique <edwin.manrique@pharr-tx.gov>, Sabrina Alvarez <sabrina@bstone.biz>, David Chacon <david@bstone.biz>

This is acceptable to GSA. I agree that the soils in the area make cast iron a bad choice for underground use.

David Cornelison
Project Manager
U.S. General Services Administration
Greater Southwest Region
Public Buildings Service
Cell (817) 822-5358
david.cornelison@gsa.gov I www.gsa.gov

On Thu, Apr 17, 2025 at 9:39 AM Rolando Ayala <rolando@bstone.biz> wrote:
[Quoted text hidden]

PCO #011

D. Wilson Construction
PO Box 3455
McAllen, Texas 78502
Phone: (956) 686-9573

Project: 24-235 - Pharr FY16 DAP-Agricultural Lab, Dock Expansion I & II
9901 S Cage Blvd
Pharr, Texas 78577

DRAFT

Prime Contract Potential Change Order #011: CE #020 - Omit Chain Link Femcing in its entirelty

TO:	City Of Pharr PO Box 1729 Pharr, Texas 78577	**FROM:**	D Wilson Construction Company PO Box 3455 McAllen, Texas 78502
PCO NUMBER/REVISION:	011 / 0	**CONTRACT:**	24-235 - City of Pharr Dock Expansion
REQUEST RECEIVED FROM:		**CREATED BY:**	Pilar Anzaldua-Garza **(D Wilson Construction Company)**
STATUS:	Draft	**CREATED DATE:**	5/12/2025
REFERENCE:		**PRIME CONTRACT CHANGE ORDER:**	None
EXECUTED:	No	**SIGNED CHANGE ORDER RECEIVED DATE:**	
SCHEDULE IMPACT:		**TOTAL AMOUNT:**	($88,508.00)

POTENTIAL CHANGE ORDER TITLE: CE #020 - Omit Chain Link Femcing in its entirelty

CHANGE REASON: No Change Reason

POTENTIAL CHANGE ORDER DESCRIPTION: *(The Contract Is Changed As Follows)*

CE #020 - Omit Chain Link Femcing in its entirelty
Credit for Chain Link Fence omitted from contract scope in its entirety.
Item 550-6008 - CHAIN LINK FENCE (INSTALL) (8') GALV SL, 6 GA, POSTS INCL BASE, 2" Posts @10" OC, INCL BASE
Item 550-6040 - CHAIN LINK FENCE (INSTALL) (8') GALV SL, 6 GA, POSTS INCL BASE

ATTACHMENTS:

#	Budget Code	Description	Amount
1	001.02-830.S	550-6008 Credit for Chain Link Fencing and Gates scope omitted in its entirety	$(83,058.00)
2	001.02-830.S	550-6040 Credit for Chain Link Fence Gate	$(5,450.00)
		Subtotal:	**$(88,508.00)**

Brownstone Consultants, LLC	**City Of Pharr**	**D Wilson Construction Company**
P.O. Box 3898	PO Box 1729	PO Box 3455
McAllen, Texas 78505	Pharr, Texas 78577	McAllen, Texas 78502
05/13/2025	Maria Luisa Rangel	
SIGNATURE **DATE**	**SIGNATURE** 5/16/2025 **DATE**	**SIGNATURE** **DATE**

D. WILSON CONSTRUCTION CO.

PROJECT : **24-235 Pharr FY16 DAP Ag Bldg, Cold Storage & Dock Expansion**

PCO 011 **Credit for Chain Link Fences, Gates, Etc entirely**

DESCRIPTION	QUANTITY	UNIT	UNIT COST L	UNIT COST M	UNIT COST S	LABOR	MATERIAL	SUB
						-	-	-
Re						-	-	-
CHAIN LINK FENCE (INSTALL) (8') GALV SL, 6 GA., 2" POSTS @ 10' OC, INCL BASE	-1905	lf			43.6	-	-	(83,058)
CHAIN LINK FENCE (INSTALL) (8') GALV SL, 6 GA., POSTS INCL BASE	-1	ea			5450	-	-	(5,450)
						-	-	-
						-	-	-
						-	-	-
						-	-	-
						-	-	-
						-	-	-
						-	-	-
						-	-	-
						-	-	-
						-	-	-
						-	-	-
						-	-	-
						-	-	-
						-	-	-
						-	-	-
						-	-	-
						-	-	-
						-	-	-
						-	-	-
						-	-	-
						-	-	-
						-	-	-
						-	-	-
SUBTOTALS						-	-	(88,508)
					TOTAL			**(88,508)**

Sheet No. **1** **Item:** **Credit for Chain Link Fences, Gates, Etc entirely**

PCO #012 REV3

D. Wilson Construction
PO Box 3455
McAllen, Texas 78502
Phone: (956) 686-9573

Project: 24-235 - Pharr FY16 DAP-Agricultural Lab, Dock Expansion I & II
9901 S Cage Blvd
Pharr, Texas 78577

DRAFT

Prime Contract Potential Change Order #012 REV3: RFI #34: Electrical Primary

TO:	City Of Pharr PO Box 1729 Pharr, Texas 78577	**FROM:**	D Wilson Construction Company PO Box 3455 McAllen, Texas 78502
PCO NUMBER/REVISION:	012 REV3 / 3	**CONTRACT:**	24-235 - City of Pharr Dock Expansion
REQUEST RECEIVED FROM:	Leo Vela **(D & F Industries, Inc.)**	**CREATED BY:**	Pilar Anzaldua-Garza **(D Wilson Construction Company)**
STATUS:	Draft	**CREATED DATE:**	5/19/2025 / Rev 3- 7/17/25
REFERENCE:	RFI 34 - ASI 03	**PRIME CONTRACT CHANGE ORDER:**	None
EXECUTED:	No	**SIGNED CHANGE ORDER RECEIVED DATE:**	
SCHEDULE IMPACT:	TBD	**TOTAL AMOUNT:**	$92,503.84

POTENTIAL CHANGE ORDER TITLE: RFI #34: Electrical Primary

CHANGE REASON: Design Development

POTENTIAL CHANGE ORDER DESCRIPTION: *(The Contract Is Changed As Follows)*
CE #013 - #34: Electrical Primary Service
Sheet E-601 shows a new MVEC Utility Transformer UT-3 being served from existing Utility Transformer UT-2. In coordinating with MVEC, they determined that the existing utility line serving UT-2 does not have the capacity to carry the added load. In addition, the new utility transformer has a current lead time of close to a year. MVEC is proposing to serve the project with (2) transformers and a new utility vault. The (2) proposed transformers are currently in MVEC yard; which can be designated for this project. For your review, attached is the MVEC Proposed Service, Sheet E-601 Electrical One Line Diagram, and the Utility Yard coordination shop drawing. Please have the A/E/O team review this installation.
In response to RFI 34 and ASI 03 (MVEC Primary Service), we propose to provide and install conduit and miscellaneous fittings to route the new MVEC required primary conduit as stated in RFI 34 response (attached).
This scope is also included in ASI 03 - however, this proposal refers only to the Electrical Primary portion of ASI 03. Any other changes not specifically listed here are excluded.
This proposal revised to reflect 1 ea 4" conduit as requested by MVEC (Freddy Ayala). Encasement will be 8" to accommodate the 1 ea 4"conduit and spacers , and fiber reinforced concrete mix. Proposal is valid for 15 days.

ATTACHMENTS:
ASI 003 REV.2 - RFI 34 & 37.pdf

#	Budget Code	Description	Amount
1	001.16-100.S	Provide and install conduit and miscellaneous fittings to route the new MVEC required primary conduit as stated in ASI 03 - RFI 34 response.	$64,058.14
2	001.02-050.S	Concrete Encasement of new electrical primary, prep of moisture conditioned cement stabilized sand, prep and compact conditioned native soil, compact and backfill as per ASI 003.	$17,600.49
3	001.03-075.M	Red Dye for concrete encasement	$750.00
4	001.03-070.M	Fiber Reinforced Concrete Mix for new concrete encasement - 33 CY @ 146/cy	$4,818.00
		Subtotal:	**$87,226.63**
		Overhead and Profit (5.00% Includes Cost Type (20)):	$4,361.33
		Bond (1.00% Applies to All Line Items):	$915.88
		Grand Total:	**$92,503.84**

Brownstone Consultants, LLC	City Of Pharr	D Wilson Construction Company
P.O. Box 3898	PO Box 1729	PO Box 3455
McAllen, Texas 78505	Pharr, Texas 78577	McAllen, Texas 78502
07/17/2025	7/21/2025	
SIGNATURE DATE	SIGNATURE DATE	SIGNATURE DATE

CHANGE ORDER WORKSHEET

PROJECT: **24-235 Pharr FY16 DAP Ag Bldg, Cold Storage & Dock Expansion** **7/17/2025**

DESCIPTION: **PCO 12 R3 ASI 03 New MVEC Primary & 2 Transfomers in liue of 1**

	Please add 5% for overhead & profit and 1% for bond, cumulatively.					Cost
01-000	GENERAL CONDITIONS					Subcontractor
02-000	SITEWORK					
Gonzalez	Concrete Ductbank labor18X18X316	316	LF	3.53	$	1,116.18
Gonzalez	Preparation and compaction of moisture conditions cement stabilized sand	218	LF	59.74	$	13,022.28
Gonzalez	Preparation and compaction of moisture conditioned native soil	98	LF	29.42	$	2,882.88
Gonzalez	Disposal of soils Hauling $200 per 20 CY trailer	1	LS	579.15	$	579.15
Gonzalez	quipment: Backhoe, Trench Padfot Roller, Jumping Jack Compactors, Wtrer truc					
				Subtotal	$	17,600.49
03-000	CONCRETE					
RGS	Reinforcing Steel for PCO 05 - additional Stirrups	0	LS	$ -		Not Used
VMK	03-070 - 360 LF 18 "X 18"= 360 CF/27	33	CY	$ 146.000	$	4,818.00
RGS	Red Dye	15	EA	50.00	$	750.00
				Subtotal	$	5,568.00
04-000	MASONRY					
05-000	STRUCTURAL STEEL					
06-000	CARPENTRY & MILLWORK					
07-000	MOISTURE PROTECTION					
08-000	DOORS & WINDOWS					
09-000	FINISHES					
10-000	SPECIALTIES					
15-000	HVAC & PLUMBING					
16-000	Electrical					
D & F Electrical	1 ea 4" Conduits to run new MVEC Electrical Primary to transformers				$	64,058.14
				Subtotal	$	64,058.14
				Combined Cost	$	87,226.63

Comments / Clarifications:
ASI 03 - Sheet E-103 - Trenching for New MVEC Primary power lines (1 ea 4" Conduit, concrete encased, boring under existing drive, casing, concrete encasement, Fiber reinforced Concrete Mix, labor to backfill and compaction

Cost	$	87,226.63
OH, Insura	$	4,361.33
Bond 1%	$	915.88
Subtotal	$	92,503.85
Change Order Total	$	92,503.85

D. WILSON CONSTRUCTION CO.

PROJECT : **24-235 Pharr FY16 DAP Ag Bldg, Cold Storage & Dock Expansion**

PCO 12 R3 **ASI 03 New MVEC Primary & 2 Transfomers in liue of 1**

DESCRIPTION	QUANTITY	UNIT	UNIT COST L	UNIT COST M	UNIT COST S	LABOR	MATERIAL	SUB
						-	-	-
RFI 26 Electrical Ductbank						-	-	-
03-200 360 LF NOT USED	0	LS		$ -		-	-	-
SITE WORK						-	-	-
Concrete Ductbank labor18X18X316	316	LF			$ 3.53	-	-	1,116.18
Preparation and compaction of moisture conditions cement stabilized sand	218	LF			$ 59.74	-	-	13,022.28
Preparation and compaction of moisture conditioned native soil	98	LF			$ 29.42	-	-	2,882.88
Disposal of soils	1	LS			$ 579.15	-	-	579.15
						-	-	-
Red Dye	15	EA		$ 50.00		-	750.00	-
						-	-	-
						-	-	-
Concrete Mix						-	-	-
03-070 - 360 LF 18 "X 18"= 360 CF/27	33	CY		$ 146.00		-	4,818.00	-
$134 Concrete mix						-	-	-
12 Fiber Reinforced								
						-	-	-
						-	-	-
						-	-	-
ELECTRICAL ()	UNITS		MANHOURS	UNIT COST	Hourly Rate	Hours	Materials	Labor Total
Materials 4" PVC	470	LF	$ 0.26	$ 10.15	$ 50.48	122.20	4,770.50	6,168.58
Materials 4" PVC Radius 90	6	ea	$ 1.32	$ 100.47	$ 50.48	7.92	602.82	399.80
Materials 4" PVC Coupling	20	ea	$ 0.30	$ 2.64	$ 50.48	6.00	52.80	302.88
Materials 4" PVC Base Spacers	78	ea	$ 0.08	$ 1.23	$ 50.48	6.24	95.94	314.99
Materials 4" PVC Boring Spacers	22	ea	$ 1.00	$ 125.00	$ 50.48	22.00	2,750.00	1,110.55
Trench	360	LF	$ 0.46	$ 2.71	$ 50.48	165.60	975.60	8,359.39
Warning Tape	360	LF	$ 0.04	$ 0.05	$ 50.48	14.40	18.00	726.90
8" Casing	110	LF	$ 0.10		$ 50.48	11.00	-	555.27
Boring Service	110	LF	$ 0.20		$ 50.48	22.00	-	1,110.55
Pull String	540	LF	$ 0.02	$ 0.01	$ 50.48	10.80	5.40	545.18
						388.16	9,271.06	19,594.08
						-	-	-
ELECTRICAL & BORING SUBCONTRACTORS						-	-	-
Labor X 30%	1	LS	$ 19,594.08			-	-	23,865.59
Materials 15%	1	LS		$ 9,271.06		-	-	10,569.01
Boring Suibcontractor * 15%	1	LS		$ -	$ 17,260.00	-	-	19,849.00
Casing Quote X 15%	1	LS		$ 5,060.00				5,819.00
Misc. Materials x 15%	1	LS	$ 1,082.00					1,244.30
Superintendent x 30%	1	LS	$ 1,242.00				-	1,552.50
Project Management x 30%	1	LS	$ 835.00				-	1,043.75
Fuel X 15%	1	LS		$ 100.00		-		115.00
Estimated 17 Days						-	-	-
						-	-	-
						-	-	-
						-	-	-
						-	-	-
SUBTOTALS						-	5,568.00	81,658.63
					TOTAL			**87,226.63**

Sheet No. 1 **Item:** **ASI 03 New MVEC Primary & 2 Transfomers in liue of 1**

Pilar Anzaldua-Garza

From: Pilar Anzaldua-Garza
Sent: Friday, July 11, 2025 5:22 PM
To: Rolando Ayala - Brownstone; David BSTONE; Sabrina Alvarez
Cc: Claudio Velasco; Roberto Villela; Emiliano Larios; Arturo Perez; Jose Pequeno; Vanessa J. Garza; Omar Salinas; Isaac Moreno; 24-235 Pharr FY16 DAP Emails
Subject: Pharr FY16 DAP Ag Lab, PH 1 & II Dock Expansion -PCO 12 Rev2 New MVEC Primary Service.pdf
Attachments: PCO 12 Rev2 New MVEC Primary Service.pdf

Good Afternoon Team:

Refer to attached PCO 12 – Rev 2 for your review and approval. Please advise as soon as possible if we are to proceed with this scope change.

Should you have any questions, please don't hesitate to contact me.

PILAR ANZALDUA-GARZA
Assistant Project Manager

Office: (956) 686-9573
Direct Line: (956) 800-6512
Email: PilarA@DWilsonConstruction.com
Web: www.dwilsonconstruction.com
Address: P.O. Box 3455, McAllen, TX 78502-3455

D. WILSON CONSTRUCTION CO.
An Employee-Owned Company

PCO #012 REV2

D. Wilson Construction
PO Box 3455
McAllen, Texas 78502
Phone: (956) 686-9573

Project: 24-235 - Pharr FY16 DAP-Agricultural Lab, Dock Expansion I & II
9901 S Cage Blvd
Pharr, Texas 78577

DRAFT

Prime Contract Potential Change Order #012 REV2: RFI #34: Electrical Primary

TO:	City Of Pharr PO Box 1729 Pharr, Texas 78577	**FROM:**	D Wilson Construction Company PO Box 3455 McAllen, Texas 78502
PCO NUMBER/REVISION:	012 REV2 / 2	**CONTRACT:**	24-235 - City of Pharr Dock Expansion
REQUEST RECEIVED FROM:	Leo Vela **(D & F Industries, Inc.)**	**CREATED BY:**	Pilar Anzaldua-Garza **(D Wilson Construction Company)**
STATUS:	Draft	**CREATED DATE:**	5/19/2025
REFERENCE:	RFI 34 - ASI 03	**PRIME CONTRACT CHANGE ORDER:**	None
EXECUTED:	No	**SIGNED CHANGE ORDER RECEIVED DATE:**	
SCHEDULE IMPACT:	24 days	**TOTAL AMOUNT:**	$95,166.93

POTENTIAL CHANGE ORDER TITLE: RFI #34: Electrical Primary

CHANGE REASON: Design Development

POTENTIAL CHANGE ORDER DESCRIPTION: *(The Contract Is Changed As Follows)*

CE #013 - #34: Electrical Primary Service

Sheet E-601 shows a new MVEC Utility Transformer UT-3 being served from existing Utility Transformer UT-2. In coordinating with MVEC, they determined that the existing utility line serving UT-2 does not have the capacity to carry the added load. In addition, the new utility transformer has a current lead time of close to a year. MVEC is proposing to serve the project with (2) transformers and a new utility vault. The (2) proposed transformers are currently in MVEC yard; which can be designated for this project. For your review, attached is the MVEC Proposed Service, Sheet E-601 Electrical One Line Diagram, and the Utility Yard coordination shop drawing. Please have the A/E/O team review this installation.

In response to RFI 34 and ASI 03 (MVEC Primary Service), we propose to provide and install conduit and miscellaneous fittings to route the new MVEC required primary conduit as stated in RFI 34 response (attached).

This scope is also included in ASI 03 - however, this proposal refers only to the Electrical Primary portion of ASI 03. Any other changes not specifically listed here are excluded.

This proposal revised to reflect 1 ea 4" conduit as requested by MVEC (Freddy Ayala). Encasement will be 8" to accommodate the 1 ea 4"conduit and spacers. Proposal is valid for 15 days.

ATTACHMENTS:

ASI 003 REV.2 - RFI 34 & 37.pdf

#	Budget Code	Description	Amount
1	001.16-100.S	Provide and install conduit and miscellaneous fittings to route the new MVEC required primary conduit as stated in ASI 03 - RFI 34 response.	$64,058.14
2	001.02-050.S	Concrete Encasement of new electrical primary, prep of moisture conditioned cement stabilized sand, prep and compact conditioned native soil, compact and backfill as per ASI 003.	$20,111.65
3	001.03-075.M	Red Dye for concrete encasement	$750.00
4	001.03-070.M	Fiber Reinforced Concrete Mix for new concrete encasement - 33 CY @ 146/cy	$4,818.00
		Subtotal:	**$89,737.79**
		Overhead and Profit (5.00% Includes Cost Type (20)):	$4,486.89
		Bond (1.00% Applies to All Line Items):	$942.25
		Grand Total:	**$95,166.93**

Brownstone Consultants, LLC
P.O. Box 3898
McAllen, Texas 78505

City Of Pharr
PO Box 1729
Pharr, Texas 78577

D Wilson Construction Company
PO Box 3455
McAllen, Texas 78502

SIGNATURE	DATE	SIGNATURE	DATE	SIGNATURE	DATE

CHANGE ORDER WORKSHEET

PROJECT: **24-235 Pharr FY16 DAP Ag Bldg, Cold Storage & Dock Expansion** **7/11/2025**

DESCIPTION: **PCO 12 R2 ASI 03 New MVEC Primary & 2 Transfomers in liue of 1**

	Please add 5% for overhead & profit and 1% for bond, cumulatively.					Cost
01-000	GENERAL CONDITIONS					Subcontractor
02-000	SITEWORK					
Gonzalez	Concrete Ductbank labor	360	LF	3.45	$	1,240.20
Gonzalez	Preparation and compaction of moisture conditions cement stabilized sand	262	LF	57.35	$	15,024.75
Gonzalez	Preparation and compaction of moisture conditioned native soil	98	LF	32.69	$	3,203.20
Gonzalez	Disposal of soils Hauling $200 per 20 CY trailer	1	LS	643.50	$	643.50
Gonzalez	quipment: Backhoe, Trench Padfot Roller, Jumping Jack Compactors, Wtrer truc					
				Subtotal	$	20,111.65
03-000	CONCRETE					
RGS	Reinforcing Steel for PCO 05 - additional Stirrups	0	LS	$ -		Not Used
VMK	03-070 - 360 LF 18 "X 18"= 360 CF/27	33	CY	$ 146.000	$	4,818.00
RGS	Red Dye	15	EA	50.00	$	750.00
				Subtotal	$	5,568.00
04-000	MASONRY					
05-000	STRUCTURAL STEEL					
06-000	CARPENTRY & MILLWORK					
07-000	MOISTURE PROTECTION					
08-000	DOORS & WINDOWS					
09-000	FINISHES					
10-000	SPECIALTIES					
15-000	HVAC & PLUMBING					
16-000	Electrical					
D & F Electrical	2 ea 4" Conduits to run new MVEC Electrical Primary to transformers				$	64,058.14
				Subtotal	$	64,058.14
				Combined Cost	$	89,737.79

Comments / Clarifications:
ASI 03 - Sheet E-103 - Trenching for New MVEC Primary power lines (1 ea 4" Conduit, concrete encased, boring under existing drive, casing, concrete encasement, Fiber reinforced Concrete Mix, labor to backfill and compaction

Cost	$	89,737.79
OH, Insura	$	4,486.89
Bond 1%	$	942.25
Subtotal	$	95,166.93
Change Order Total	$	95,166.93

D. WILSON CONSTRUCTION CO.

PROJECT : **24-235 Pharr FY16 DAP Ag Bldg, Cold Storage & Dock Expansion**

PCO 12 R2 **ASI 03 New MVEC Primary & 2 Transfomers in liue of 1**

DESCRIPTION	QUANTITY	UNIT	UNIT COST L	UNIT COST M	UNIT COST S	LABOR	MATERIAL	SUB
						-	-	-
RFI 26 Electrical Ductbank						-	-	-
03-200 360 LF NOT USED	0	LS		$ -		-	-	-
SITE WORK						-	-	-
Concrete Ductbank labor	360	LF			$ 3.45	-	-	1,240.20
Preparation and compaction of moisture conditions cement stabilized sand	262	LF			$ 57.35	-	-	15,024.75
Preparation and compaction of moisture conditioned native soil	98	LF			$ 32.69	-	-	3,203.20
Disposal of soils	1	LS			$ 643.50	-	-	643.50
						-	-	-
Red Dye	15	EA		$ 50.00		-	750.00	-
						-	-	-
						-	-	-
Concrete Mix						-	-	-
03-070 - 360 LF 18 "X 18"= 360 CF/27	33	CY		$ 146.00		-	4,818.00	-
$134 Concrete mix						-	-	-
12 Fiber Reinforced								
						-	-	-
						-	-	-
						-	-	-
ELECTRICAL ()	UNITS		MANHOURS	UNIT COST	Hourly Rate	Hours	Materials	Labor Total
Materials 4" PVC	470	LF	$ 0.26	$ 10.15	$ 50.48	122.20	4,770.50	6,168.58
Materials 4" PVC Radius 90	6	ea	$ 1.32	$ 100.47	$ 50.48	7.92	602.82	399.80
Materials 4" PVC Coupling	20	ea	$ 0.30	$ 2.64	$ 50.48	6.00	52.80	302.88
Materials 4" PVC Base Spacers	78	ea	$ 0.08	$ 1.23	$ 50.48	6.24	95.94	314.99
Materials 4" PVC Boring Spacers	22	ea	$ 1.00	$ 125.00	$ 50.48	22.00	2,750.00	1,110.55
Trench	360	LF	$ 0.46	$ 2.71	$ 50.48	165.60	975.60	8,359.39
Warning Tape	360	LF	$ 0.04	$ 0.05	$ 50.48	14.40	18.00	726.90
8" Casing	110	LF	$ 0.10		$ 50.48	11.00	-	555.27
Boring Service	110	LF	$ 0.20		$ 50.48	22.00	-	1,110.55
Pull String	540	LF	$ 0.02	$ 0.01	$ 50.48	10.80	5.40	545.18
						388.16	9,271.06	19,594.08
						-	-	-
ELECTRICAL & BORING SUBCONTRACTORS						-	-	-
Labor X 30%	1	LS	$ 19,594.08			-	-	23,865.59
Materials 15%	1	LS		$ 9,271.06		-	-	10,569.01
Boring Suibcontractor * 15%	1	LS		$ -	$ 17,260.00	-	-	19,849.00
Casing Quote X 15%	1	LS		$ 5,060.00				5,819.00
Misc. Materials x 15%	1	LS	$ 1,082.00					1,244.30
Superintendent x 30%	1	LS	$ 1,242.00				-	1,552.50
Project Management x 30%	1	LS	$ 835.00				-	1,043.75
Fuel X 15%	1	LS		$ 100.00		-		115.00
Estimated 17 Days						-	-	-
						-	-	-
						-	-	-
						-	-	-
						-	-	-
SUBTOTALS						-	5,568.00	84,169.79

TOTAL **89,737.79**

Sheet No. 1 **Item:** **ASI 03 New MVEC Primary & 2 Transfomers in liue of 1**

PCO #012

D. Wilson Construction
PO Box 3455
McAllen, Texas 78502
Phone: (956) 686-9573

Project: 24-235 - Pharr FY16 DAP-Agricultural Lab, Dock Expansion I & II
9901 S Cage Blvd
Pharr, Texas 78577

DRAFT

Prime Contract Potential Change Order #012: RFI #34: Electrical Primary

TO:	City Of Pharr PO Box 1729 Pharr, Texas 78577	**FROM:**	D Wilson Construction Company PO Box 3455 McAllen, Texas 78502
PCO NUMBER/REVISION:	012 / 1	**CONTRACT:**	24-235 - City of Pharr Dock Expansion
REQUEST RECEIVED FROM:	Trent Hausenfluck **(D & F Industries, Inc.)**	**CREATED BY:**	Pilar Anzaldua-Garza **(D Wilson Construction Company)**
STATUS:	Draft	**CREATED DATE:**	5/19/2025
REFERENCE:	RFI 34 - ASI 03	**PRIME CONTRACT CHANGE ORDER:**	None
EXECUTED:	No	**SIGNED CHANGE ORDER RECEIVED DATE:**	
SCHEDULE IMPACT:	24 days	**TOTAL AMOUNT:**	$108,174.18

POTENTIAL CHANGE ORDER TITLE: RFI #34: Electrical Primary

CHANGE REASON: Design Development

POTENTIAL CHANGE ORDER DESCRIPTION: *(The Contract Is Changed As Follows)*

CE #013 - #34: Electrical Primary Service

Sheet E-601 shows a new MVEC Utility Transformer UT-3 being served from existing Utility Transformer UT-2. In coordinating with MVEC, they determined that the existing utility line serving UT-2 does not have the capacity to carry the added load. In addition, the new utility transformer has a current lead time of close to a year. MVEC is proposing to serve the project with (2) transformers and a new utility vault. The (2) proposed transformers are currently in MVEC yard; which can be designated for this project. For your review, attached is the MVEC Proposed Service, Sheet E-601 Electrical One Line Diagram, and the Utility Yard coordination shop drawing. Please have the A/E/O team review this installation.

In response to RFI 34 and ASI 03 (MVEC Primary Service), we propose to provide and install conduit and miscellaneous fittings to route the new MVEC required primary conduit as stated in RFI 34 response (attached).
This scope is also included in ASI 03 - however, this proposal refers only to the Electrical Primary portion of ASI 03. Any other changes not specifically listed here are excluded.

This proposal revised to reflect 2ea 4" conduits as requested by MVEC (Freddy Ayala) one conduit to be a spare. As per RFI 15 - 18" minimum encasement.
Proposal is valid for 15 days.

ATTACHMENTS:

ASI 003 REV.2 - RFI 34 & 37.pdf

#	Budget Code	Description	Amount
1	001.16-100.S	Provide and install conduit and miscellaneous fittings to route the new MVEC required primary conduit as stated in ASI 03 - RFI 34 response.	$91,318.00
2	001.02-050.S	Concrete Encasement of new electrical primary, compact and backfill as per ASI 003	$6,000.00
3	001.03-075.M	Reinforcing Steel and Color for Concrete encasement of electrical primary lines.	$2,025.00
4	001.03-070.M	Concrete Mix for new concrete encasement - 20 CY	$2,660.00
		Subtotal:	**$102,003.00**
		Overhead and Profit (5.00% Includes Cost Type (20)):	$5,100.15
		Bond (1.00% Applies to All Line Items):	$1,071.03
		Grand Total:	**$108,174.18**

PCO #012

D. Wilson Construction
PO Box 3455
McAllen, Texas 78502
Phone: (956) 686-9573

Project: 24-235 - Pharr FY16 DAP-Agricultural Lab, Dock Expansion I & II
9901 S Cage Blvd
Pharr, Texas 78577

DRAFT

Prime Contract Potential Change Order #012: RFI #34: Electrical Primary

TO:	City Of Pharr PO Box 1729 Pharr, Texas 78577	**FROM:**	D Wilson Construction Company PO Box 3455 McAllen, Texas 78502
PCO NUMBER/REVISION:	012 / 0	**CONTRACT:**	24-235 - City of Pharr Dock Expansion
REQUEST RECEIVED FROM:	Trent Hausenfluck **(D & F Industries, Inc.)**	**CREATED BY:**	Pilar Anzaldua-Garza **(D Wilson Construction Company)**
STATUS:	Draft	**CREATED DATE:**	5/19/2025
REFERENCE:	RFI 34 - ASI 03	**PRIME CONTRACT CHANGE ORDER:**	None
EXECUTED:	No	**SIGNED CHANGE ORDER RECEIVED DATE:**	
SCHEDULE IMPACT:	17 days	**TOTAL AMOUNT:**	$88,816.90

POTENTIAL CHANGE ORDER TITLE: RFI #34: Electrical Primary

CHANGE REASON: Design Development

POTENTIAL CHANGE ORDER DESCRIPTION: *(The Contract Is Changed As Follows)*

CE #013 - #34: Electrical Primary Service

Sheet E-601 shows a new MVEC Utility Transformer UT-3 being served from existing Utility Transformer UT-2. In coordinating with MVEC, they determined that the existing utility line serving UT-2 does not have the capacity to carry the added load. In addition, the new utility transformer has a current lead time of close to a year. MVEC is proposing to serve the project with (2) transformers and a new utility vault. The (2) proposed transformers are currently in MVEC yard; which can be designated for this project. For your review, attached is the MVEC Proposed Service, Sheet E-601 Electrical One Line Diagram, and the Utility Yard coordination shop drawing. Please have the A/E/O team review this installation.

In response to RFI 34 and ASI 03 (MVEC Primary Service), we propose to provide and install conduit and miscellaneous fittings to route the new MVEC required primary conduit as stated in RFI 34 response (attached).
This scope is also included in ASI 03 - however, this proposal refers only to the Electrical Primary portion of ASI 03. Any other changes not specifically listed here are excluded.

ATTACHMENTS:

ASI 003 REV.2 - RFI 34 & 37.pdf

#	Budget Code	Description	Amount
1	001.16-100.S	Provide and install conduit and miscellaneous fittings to route the new MVEC required primary conduit as stated in ASI 03 - RFI 34 response.	$73,065.02
2	001.02-050.S	Concrete Encasement of new electrical primary, compact and backfill as per ASI 003	$6,000.00
3	001.03-075.M	Reinforcing Steel and Color for Concrete encasement of electrical primary lines.	$2,025.00
4	001.03-070.M	Concrete Mix for new concrete encasement - 20 CY	$2,660.00
		Subtotal:	**$83,750.02**
		Overhead and Profit (5.00% Includes Cost Type (20)):	$4,187.50
		Bond (1.00% Applies to All Line Items):	$879.38
		Grand Total:	**$88,816.90**

April 3, 2025
57325.002

ASI 003

Pharr FY16 DAP - Agricultural Lab, Dock Expansion I & II
City of Pharr
GSA & CBP
TxDOT

This Modification shall be considered part of the Bidding/Construction Documents and is issued to change, amplify, add to, delete from, or otherwise explain the plans and specifications. Where provisions of this Modification differ from those of the original Bidding/Construction Documents, this Modification shall take precedence over the original plans and specifications and shall govern.

CONSTRUCTION DOCUMENT SHEETS

FP-101

- Correction to Key Notes 1 and 2 to refer to the correct civil plan for continuation (Sheet C-402).

does not apply to this change proposal

P-101

- Correction to Key Note 3 to refer to the correct civil plan for continuation (Sheet C-402).

P-102

- Correction to Key Note 12 to refer to the correct civil plan for continuation (Sheet C-402).

P-901

- Correction to continuation point to refer to Sheet C-402 for waste connection.

P-902

- Correction to continuation point to refer to Sheet C-402 for waste connection.

P-904

- Correction to continuation point to refer to Sheet C-402 for domestic water connection.

E-002

- General Abbreviations – Addition of “Below Finished Grade” (BFG).

E-103

- Power Site Plan – New Power Utility underground primary feeder location and path that includes a new primary vault and two (2) Power Utility transformers, according to the updated MVEC service proposal.
- General Notes – Clarification on coordination required with the Power Utility about its equipment and clearances.
- General Notes – Clarification on coordination required with other disciplines work, including any digging task.

E-104

- Power Site Plan – Update on the number, location, and tagging of two (2) Power Utility transformers and a new primary vault, according to the updated MVEC proposal.

E-401

- Enlarged Power Site Plan – Update on the number, location, and tag of two (2) Power Utility transformers and a new primary vault according to the updated MVEC proposal.

E-402

- Enlarged Plan Electrical Room 154 – Update on the underground main low-voltage feeders location and tagging, coming to the main switchboard “MSB1” and the automatic transfer switch “ATS-3”.

E-601

- Electrical One-Line Diagram - Update on the number, connection, and tagging of two (2) Power Utility transformers and a new primary vault, according to the updated MVEC proposal.
- One-Line Symbols Legend – Utility primary vault symbol included.
- Feeder-Branch Circuit Schedule – Update on the P001 feeder remark “By MVEC”.

E-602

- Feeder-Branch Circuit Schedule – Update on the P001 feeder remark “By MVEC”.

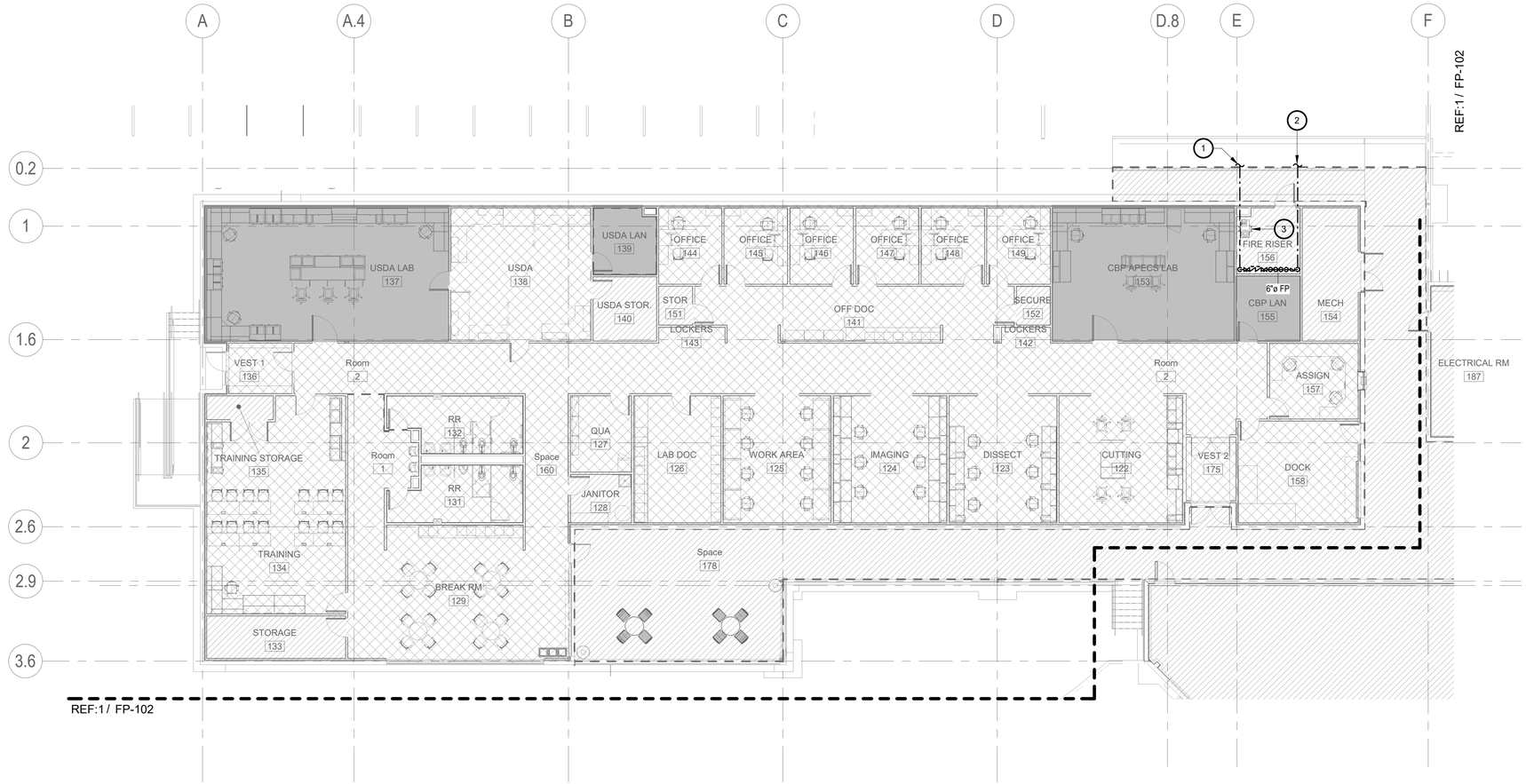

1 CONCEPTUAL FIRE PROTECTION PLAN - AREA A
3/32" = 1'-0"

does not apply to this change proposal

THESE CONCEPTUAL FIRE SPRINKLER PROTECTION PLANS ARE FOR INFORMATION PURPOSES ONLY. ALL FIRE SPRINKLER AND CIVIL PLANS ARE TO BE SUBMITTED SEPARATELY TO ISO AND TO THE RESPECTIVE AUTHORITY GOVERNING THE FIRE DEPARTMENT FOR REVIEW OF COMPLIANCE STANDARDS.

LEGEND

LIGHT HAZARD FOR CLASS ROOMS, OFFICES, CORRIDORS, GYMNASIUM, CAFETERIA, AUDITORIUM (EXCEPT STORAGE AREA), LIBRARY (EXCEPT LARGE STACK ROOM AREAS). DESIGN DENSITY IS 0.10 GPM/SQ.FT. 100 GPM HOSE ALLOWANCE DESIGN AREA=1500 SQ. FT.

ORDINARY HAZARD GROUP 1. DESIGN DENSITY IS 0.15 GPM/SQ.FT. 250 GPM HOSE ALLOWANCE DESIGN AREA=1500 SQ. FT.

ORDINARY HAZARD GROUP 2 FOR STORAGE ROOMS, MECHANICAL ROOMS, LARGE STACK ROOM AREAS OF THE LIBRARY (IF ANY). DESIGN DENSITY IS 0.20 GPM/SQ.FT. 250 GPM HOSE ALLOWANCE DESIGN AREA=1500 SQ. FT.

GENERAL NOTES

1. UNCONDITIONED LOADING AND DOCK AREAS SHALL BE PROTECTED WITH A WET PIPE SPRINKLER SYSTEM.
2. COLD INSPECTION DOCK AREAS WHERE TEMPERATURES ARE BELOW 40 DEGREES FAHRENHEIT SHALL BE PROTECTED WITH A DRY PIPE SPRINKLER SYSTEM.
3. FOR ALL DRY PIPE FIRE SPRINKLER SYSTEMS ALL PIPING SHALL BE SCHEDULE 40 AND SHALL BE PITCHED IN ACCORDANCE WITH NFPA 13 TO ALLOW FOR FULL DRAINING OF SYSTEM.
4. HOSE STREAM ALLOWANCE FOR WAREHOUSES SHALL BE 500 GPM FOR 90 MINUTES PER NFPA 13.
5. HLVS FANS WHERE INDICATED ON MECHANICAL DRAWINGS MUST BE INSTALLED A MINIMUM OF 3 FEET BELOW SPRINKLER DEFLECTOR AND CENTERED BETWEEN (4) FOUR ADJACENT SPRINKLERS PER NFPA 12.1.4.1.
6. PROVIDE A WET-PIPE FIRE SPRINKLER SYSTEM WITH A SUPERVISED ISOLATION CONTROL VALVE FOR ALL LAN/TELEPHONE ROOMS. PROVIDE CONCEALED TYPE FIRE SPRINKLERS WITH A TEMPERATURE RATING OF 212 DEGREES F. THE SPRINKLER PIPING FOR ALL LAN/TELEPHONE ROOMS SHALL BE HYDROSTATICALLY TESTED AT 220 PSI MINIMUM FOR TWO HOURS.
7. IN ADDITION TO THE FIRE SPRINKLER SYSTEM, A SUPPLEMENTAL CHEMICAL FIRE SUPPRESSION SYSTEM SHALL ALSO BE INSTALLED FOR ALL LAN ROOMS. REFER TO SPECIFICATION SECTION 212200 FOR SYSTEM PERFORMANCE REQUIREMENTS AND SPECIFICATIONS.
8. ALL FIRE PROTECTION SYSTEM PIPING SHALL BE CLEAN, PRIMED AND PAINTED WITH ONE COAT OF RED ALKYD GLOSS ENAMEL PAINT. EXPOSED PIPING IN FINISHED AREAS SHALL BE PAINTED TO MATCH ADJACENT SURFACES AND PROVIDED WITH 2-INCH WIDE RED ALKYD FLOSS ENAMEL PAINT BANDS EVERY 10 FEET AND ON BOTH SIDES OF WALL, CEILING AND FLOOR PENETRATIONS. SUBJECT TO APPROVAL BY CBP, PAINTING ALL EXPOSED PIPING IN FINISHED AREAS WITH RED ALKYD GLOSS ENAMEL PAINT MAY BE CONSIDERED AN ACCEPTABLE ALTERNATIVE TO PAINTING BANDS.

KEY NOTES

1 6" UNDERGROUND FIRE SERVICE. RE: C-402 FOR CONTINUATION. 3
2 4" UNDERGROUND FIRE DEPARTMENT CONNECTION (FDC) LINE. RE: C-402 FOR CONTINUATION TO FDC. 3
3 NITROGEN GENERATING AIR COMPRESSOR FOR DRY-PIPE SPRINKLER SYSTEM.

AVO# 33135

halff

April 3, 2025
13155.007

ASI 003
Pharr FY16 DAP - Agricultural Lab, Dock Expansion I & II
City of Pharr
GSA & CBP
TxDOT

This Modification shall be considered part of the Bidding/Construction Documents and is issued to change, modify, add to, delete from, or otherwise clarify certain that plans and specifications. Where provisions of this Modification differ from those of the original Bidding/Construction Documents, this Modification shall take precedence over the original plans and specifications and shall govern.

CONSTRUCTION DOCUMENT SHEETS

FP-101
- Correction to Key Notes 1 and 2 to refer to the correct civil plan for continuation (Sheet C-402).

P-101
- Correction to Key Note 3 to refer to the correct civil plan for continuation (Sheet C-402).

P-102
- Correction to Key Note 12 to refer to the correct civil plan for continuation (Sheet C-402).

P-901
- Correction to continuation point to refer to Sheet C-402 for waste connection.

P-902
- Correction to continuation point to refer to Sheet C-402 for waste connection.

P-904
- Correction to continuation point to refer to Sheet C-402 for domestic water connection.

E-002
- General Abbreviations – Addition of "Below Finished Grade" (BFG).

E-103
- Power Site Plan – New Power Utility underground primary feeder location and path that includes a new primary vault and two (2) Power Utility transformers, according to the updated MVEC service proposal.
- General Notes – Clarification on coordination required with the Power Utility about its equipment and clearances.
- General Notes – Clarification on coordination required with other disciplines work, including any digging task.

E-104
- Power Site Plan – Update on the number, location, and tagging of two (2) Power Utility transformers and a new primary vault, according to the updated MVEC proposal.

E-401
- Enlarged Power Site Plan – Update on the number, location, and tag of two (2) Power Utility transformers and a new primary vault according to the updated MVEC proposal.

E-402
- Enlarged Plan Electrical Room 154 – Update on the underground main low-voltage feeders location and tagging, coming to the main switchboard "MSB1" and the automatic transfer switch "ATS-3".

E-601
- Electrical One-Line Diagram – Update on the number, connection, and tagging of two (2) Power Utility transformers and a new primary vault, according to the updated MVEC proposal.
- One-Line Symbols Legend – Utility primary vault symbol included.
- Feeder Branch Circuit Schedule – Update on the P001 feeder remark "Ity MVEC".

E-602
- Feeder Branch Circuit Schedule – Update on the P001 feeder remark "Ity MVEC".

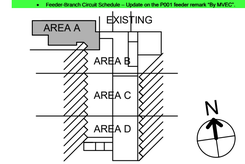

No.	Date	Description
3	03/21/2025	ASI 003

STATE OF TEXAS
MARK ANDREW SISLEN
9723
3-21-2025

Pharr
CITY OF PHARR, TEXAS

GSA
GENERAL SERVICES ADMINISTRATION
819 TAYLOR STREET
FORT WORTH, TEXAS 76102-6195
817-978-3334
www.gsa.gov

©2018
TEXAS DEPARTMENT OF TRANSPORTATION

halff
5000 WEST MILITARY, SUITE 100, McALLEN, TEXAS 78503
TEL (956) 664-0286 FAX (956) 664-0282 TBPE FIRM #F-312

PHARR FY16 DAP - IMPORT DOCK AND AG LAB IMPROVEMENTS
CONCEPTUAL FIRE PROTECTION PLAN - AREA A

SCALE: AS NOTED	SHEET OF			
DN:	CONT	SECT	JOB	HIGHWAY
CK DN:	921	02	424,425,433	PHARR INT. BRIDGE
DW:	DIST	COUNTY		SHEET NO.
CK DW:	PHR	HIDALGO		FP-101
TR:				
CK TR:				

AVO# 33135

halff

April 3, 2025
13155.007

ASI 003

Pharr FY16 DAP - Agricultural Lab, Dock Expansion I & II
City of Pharr
GSA & CBP
TxDOT

This Modification shall be considered part of the Bidding/Construction Documents and is issued to change, add to, delete from, or otherwise modify certain plans and specifications. Where provisions of this Modification differ from those of the original Bidding/Construction Documents, this Modification shall take precedence over the original plans and specifications and shall govern.

CONSTRUCTION DOCUMENT SHEETS

FP-101
- Correction to Key Notes 1 and 2 to refer to the correct civil plan for continuation (Sheet C-402).

P-101
- Correction to Key Note 3 to refer to the correct civil plan for continuation (Sheet C-402).

P-102
- Correction to Key Note 12 to refer to the correct civil plan for continuation (Sheet C-402).

P-901
- Correction to continuation point to refer to Sheet C-402 for waste connection.

P-902
- Correction to continuation point to refer to Sheet C-402 for waste connection.

P-904
- Correction to continuation point to refer to Sheet C-402 for domestic water connection.

E-002
- General Abbreviations – Addition of "Below Finished Grade" (BFG).

E-103
- Power Site Plan – New Power Utility underground primary feeder location and path that includes a new primary vault and two (2) Power Utility transformers, according to the updated MVEC service proposal.
- General Notes – Clarification on coordination required with the Power Utility about its equipment and clearances.
- General Notes – Clarification on coordination required with other disciplines work, including any digging task.

E-104
- Power Site Plan – Update on the number, location, and tagging of two (2) Power Utility transformers and a new primary vault, according to the updated MVEC proposal.

E-401
- Enlarged Power Site Plan – Update on the number, location, and tag of two (2) Power Utility transformers and a new primary vault according to the updated MVEC proposal.

E-402
- Enlarged Plan Electrical Room 154 – Update on the underground main low-voltage feeders location and tagging, coming to the main switchboard "MSB1" and the automatic transfer switch "ATS-3".

E-601
- Electrical One-Line Diagram – Update on the number, connection, and tagging of two (2) Power Utility transformers and a new primary vault, according to the updated MVEC proposal.
- One-Line Symbols Legend – Utility primary vault symbol included.
- Feeder-Branch Circuit Schedule – Update on the P001 feeder remark "Ely MVEC".

E-602
- Feeder-Branch Circuit Schedule – Update on the P001 feeder remark "Ely MVEC".

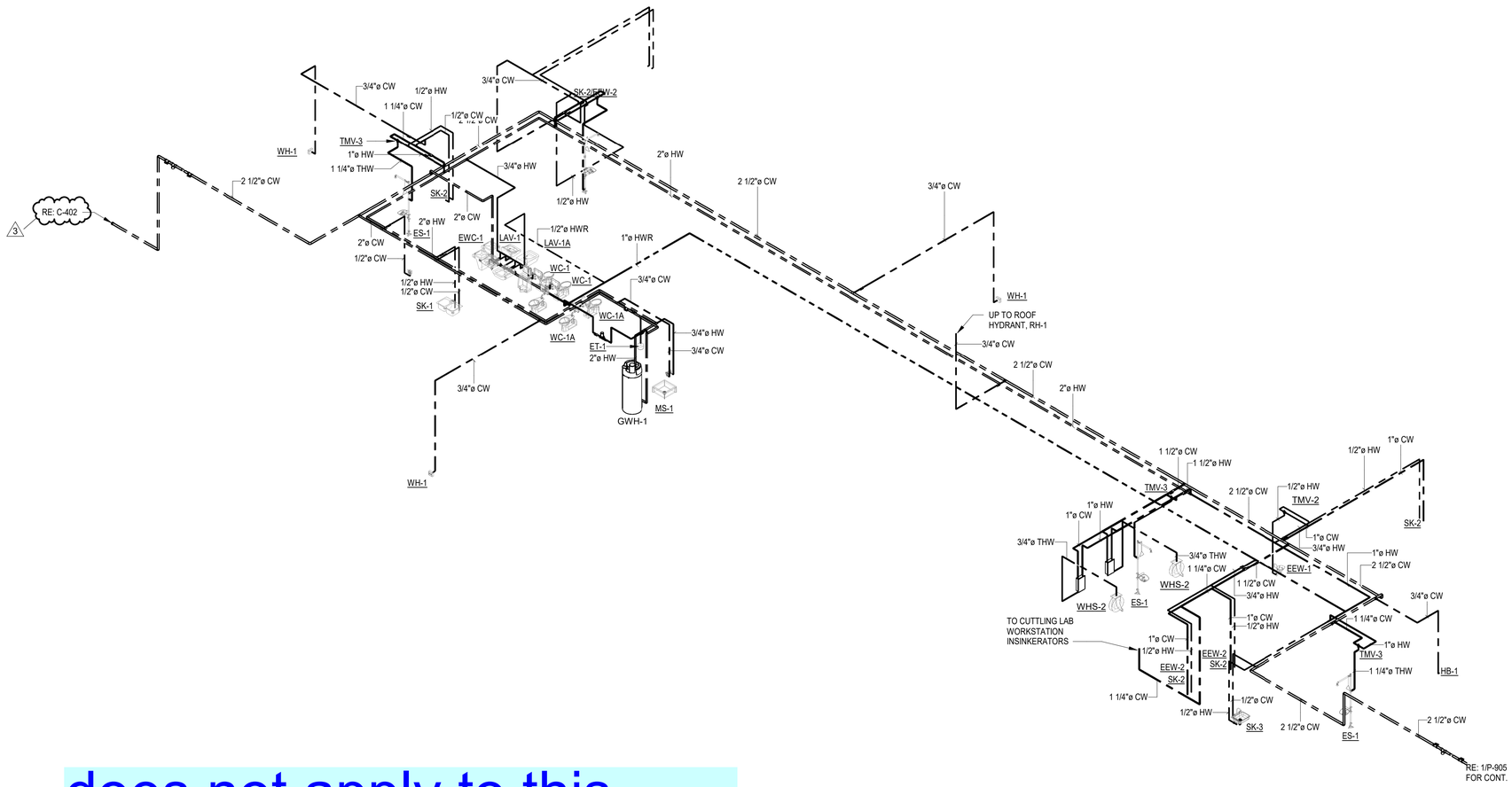

1 PLUMBING RISER SCHEMATIC DIAGRAM - DOMESTIC WATER - AREA A

does not apply to this change proposal

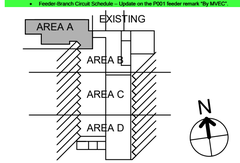

No.	Date	Description
3	03/21/2025	ASI 003

STATE OF TEXAS
MARK ANDREW SISLEN
97234
LICENSED
3-21-2025

Pharr
CITY OF PHARR, TEXAS

GSA
GENERAL SERVICES ADMINISTRATION
819 TAYLOR STREET
FORT WORTH, TEXAS 76102-6195
817-978-3334
www.gsa.gov

© 2018
TEXAS DEPARTMENT OF TRANSPORTATION

halff
5000 WEST MILITARY, SUITE 100, McALLEN, TEXAS 78503
TEL (956) 664-0286 FAX (956) 664-0282 TBPE FIRM #F-312

PHARR FY16 DAP - IMPORT DOCK AND AG LAB IMPROVEMENTS

PLUMBING RISER DIAGRAMS

SCALE: AS NOTED | SHEET OF

DN:	CONT	SECT	JOB	HIGHWAY
CK DN:	921	02	424,425,433	PHARR INT. BRIDGE
DW:	DIST		COUNTY	SHEET NO.
CK DW:	PHR		HIDALGO	P-904
TR:				
CK TR:				

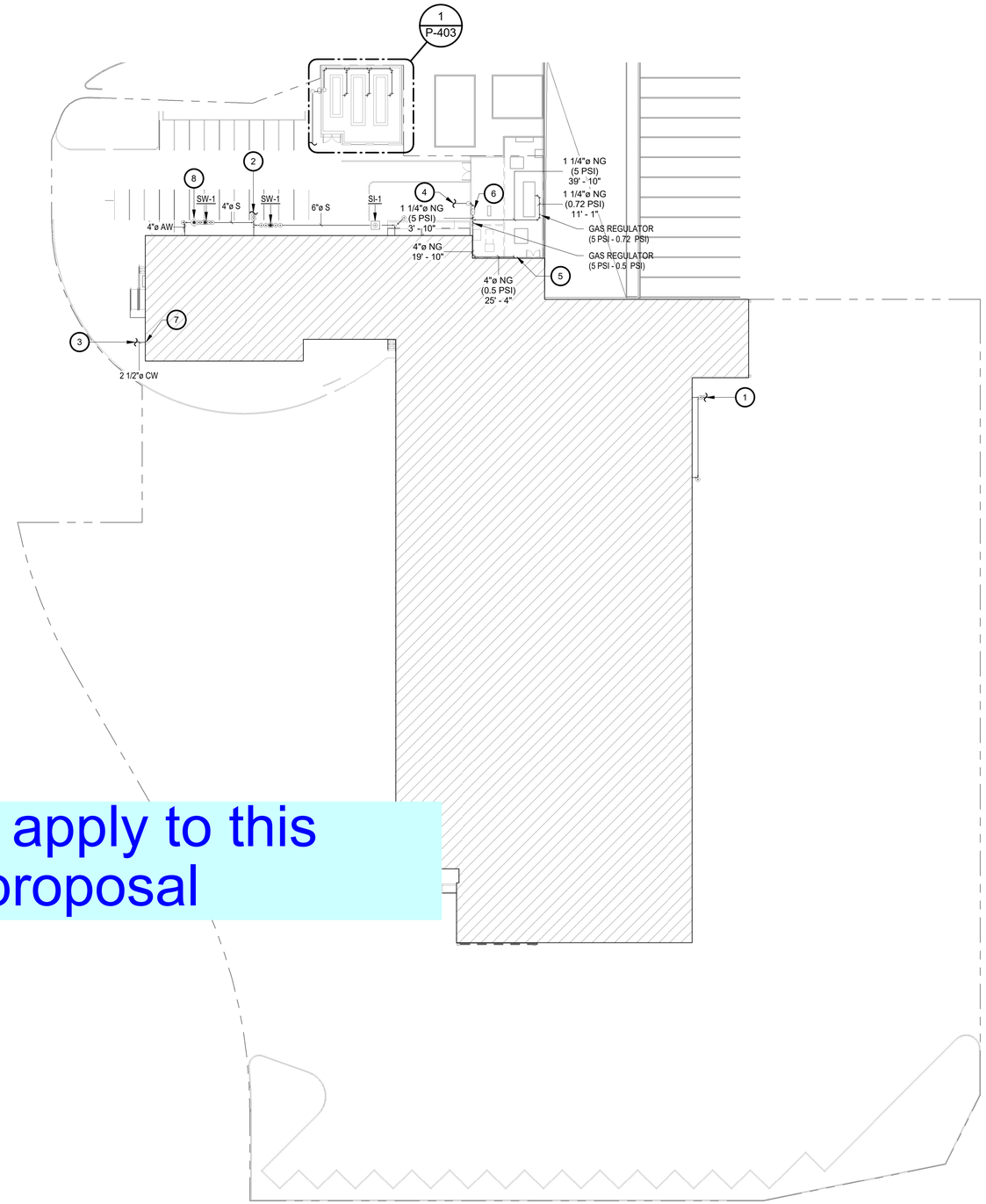

does not apply to this change proposal

1 PLUMBING SITE PLAN
1" = 40'-0"

KEY NOTES

1. 4" SANITARY SEWER AT 1/8"/FT. SLOPE. I.E. = 85.58. REFERENCE CIVIL DRAWINGS FOR CONTINUATION.
2. 6" SANITARY SEWER AT 1/8"/FT. SLOPE. I.E. = 88.82. REFERENCE CIVIL DRAWINGS FOR CONTINUATION.
3. PROPOSED DOMESTIC WATER BUILDING ENTRANCE. RE: C-402 FOR CONTINUATION. 3
4. RE: CIVIL FOR CONTINUATION.
5. RE: 1/P-107 FOR CONTINUATION.
6. PROPOSED LOCATION FOR NEW GAS METER AND REGULATOR ASSEMBLY. TOTAL DEMAND = 7,689.80 CFH.
7. RE: 1/P-106 FOR CONTINUATION.
8. ACID NEUTRALIZATION TANK PROVIDED BY USDA.

AVO# 33135

halff

April 3, 2025
13155.007

ASI 003
Pharr FY16 DAP - Agricultural Lab, Dock Expansion I & II
City of Pharr
GSA & CBP
TxDOT

This Modification shall be considered part of the Bidding/Construction Documents and is issued to change, clarify, add to, delete from, or otherwise modify certain that plans and specifications. Where provisions of this Modification differ from those of the original Bidding/Construction Documents, this Modification shall take precedence over the original plans and specifications and shall govern.

CONSTRUCTION DOCUMENT SHEETS

FP-101
- Correction to Key Notes 1 and 2 to refer to the correct civil plan for continuation (Sheet C-402).

P-101
- Correction to Key Note 3 to refer to the correct civil plan for continuation (Sheet C-402).

P-102
- Correction to Key Note 12 to refer to the correct civil plan for continuation (Sheet C-402).

P-901
- Correction to continuation point to refer to Sheet C-402 for waste connection.

P-902
- Correction to continuation point to refer to Sheet C-402 for waste connection.

P-904
- Correction to continuation point to refer to Sheet C-402 for domestic water connection.

E-002
- General Abbreviations – Addition of "Below Finished Grade" (BFG).

E-103
- Power Site Plan – New Power Utility underground primary feeder location and path that includes a new primary vault and two (2) Power Utility transformers, according to the updated MVEC service proposal.
- General Notes – Clarification on coordination required with the Power Utility about its equipment and clearances.
- General Notes – Clarification on coordination required with other disciplines work, including any digging task.

E-104
- Power Site Plan – Update on the number, location, and tagging of two (2) Power Utility transformers and a new primary vault, according to the updated MVEC proposal.

E-401
- Enlarged Power Site Plan – Update on the number, location, and tag of two (2) Power Utility transformers and a new primary vault according to the updated MVEC proposal.

E-402
- Enlarged Plan Electrical Room 154 – Update on the underground main low-voltage feeders location and tagging, coming to the main switchboard "MSB1" and the automatic transfer switch "ATS-3".

E-601
- Electrical One-Line Diagram – Update on the number, connection, and tagging of two (2) Power Utility transformers and a new primary vault, according to the updated MVEC proposal.
- One-Line Symbols Legend – Utility primary vault symbol included.
- Feeder-Branch Circuit Schedule – Update on the P001 feeder remark "By MVEC".

E-602
- Feeder-Branch Circuit Schedule – Update on the P001 feeder remark "By MVEC".

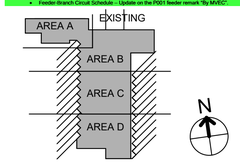

No.	Date	Description
3	03/21/2025	ASI 003

STATE OF TEXAS
MARK ANDREW SISLEN
97234
LICENSED
3-21-2025

Pharr
CITY OF PHARR, TEXAS

GSA
GENERAL SERVICES ADMINISTRATION
819 TAYLOR STREET
FORT WORTH, TEXAS 76102-6195
817-978-3334
www.gsa.gov

©2018
TEXAS DEPARTMENT OF TRANSPORTATION

halff
5000 WEST MILITARY, SUITE 100, McALLEN, TEXAS 78503
TEL (956) 664-0286 FAX (956) 664-0282 TBPE FIRM #F-312

PHARR FY16 DAP - IMPORT DOCK AND AG LAB IMPROVEMENTS

PLUMBING SITE PLAN

SCALE: AS NOTED	SHEET OF			
DN:	CONT	SECT	JOB	HIGHWAY
CK DN:	921	02	424,425,433	PHARR INT. BRIDGE
DW:	DIST	COUNTY		SHEET NO.
CK DW:	PHR	HIDALGO		P-101
TR:				
CK TR:				

AVO# 33135

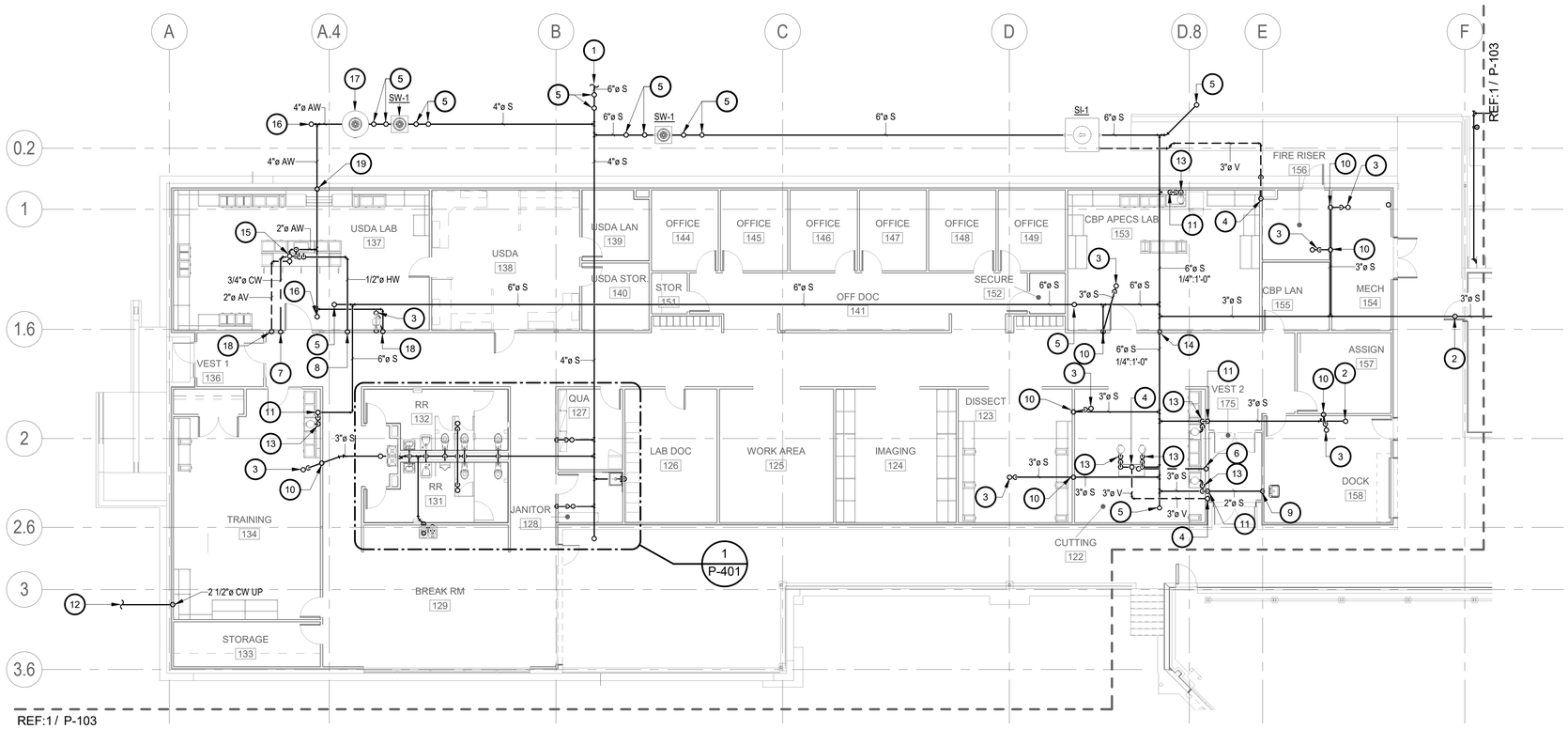

REF:1 / P-103

KEY NOTES

1. 6" SANITARY SEWER AT 1/8"/FT. SLOPE. I.E. = 88.82. REFERENCE CIVIL DRAWINGS FOR CONTINUATION.
2. 3" WASTE UP TO FLOOR CLEANOUT.
3. 3" TRAP UP TO FLOOR DRAIN.
4. 3" VENT UP.
5. 4" WASTE UP TO FLOOR CLEANOUT.
6. 1 1/4" CW DOWN IN WALL FROM ABOVE. ROUTE TO CUTTING LAB WORKSTATION INSINKERATORS.
7. 1/2" CW DOWN IN WALL. ROUTE UNDERGROUND TO LAB SINK.
8. 1/2" HW DOWN IN WALL. ROUTE UNDERGROUND TO LAB SINK.
9. 2" WASTE DOWN FROM PLUMBING FIXTURE ABOVE.
10. 2" VENT UP.
11. 3" VENT UP AND 6" WASTE DOWN.
12. PROPOSED DOMESTIC WATER BUILDING ENTRANCE. REF. C-402 FOR CONTINUATION. 3
13. TRAP 6" DRAIN OUTLET AT FOOD WASTE DISPOSER.
14. 2" SEWER UP.
15. 2" ISLAND FIXTURE ACID WASTE VENT. PROVIDE WITH VENT CLEANOUT.
16. 4" ACID WASTE UP TO FLOOR CLEANOUT.
17. ACID NEUTRALIZATION TANK PROVIDED BY USDA.
18. 2" ACID WASTE VENT UP.
19. 2" ACID WASTE UP.

1 PLUMBING UNDER FLOOR PLAN - AREA A
3/32" = 1'-0"

does not apply to this change proposal

halff

April 3, 2025
13155.007

ASI 003
Pharr FY16 DAP - Agricultural Lab, Dock Expansion I & II
City of Pharr
USA & CBP
TxDOT

This Modification shall be considered part of the Bidding/Construction Documents and is issued to change, clarify, add to, delete from, or otherwise modify the plans and specifications. Where provisions of this Modification differ from those of the original Bidding/Construction Documents, this Modification shall take precedence over the original plans and specifications and shall govern.

CONSTRUCTION DOCUMENT SHEETS

FP-101
- Correction to Key Notes 1 and 2 to refer to the correct civil plan for continuation (Sheet C-402).

P-101
- Correction to Key Note 3 to refer to the correct civil plan for continuation (Sheet C-402).

P-102
- Correction to Key Note 12 to refer to the correct civil plan for continuation (Sheet C-402).

P-901
- Correction to continuation point to refer to Sheet C-402 for waste connection.

P-902
- Correction to continuation point to refer to Sheet C-402 for waste connection.

P-904
- Correction to continuation point to refer to Sheet C-402 for domestic water connection.

E-002
- General Abbreviations – Addition of "Below Finished Grade" (BFG).

E-103
- Power Site Plan – New Power Utility underground primary feeder location and path that includes a new primary vault and two (2) Power Utility transformers, according to the updated MVEC service proposal.
- General Notes – Clarification on coordination required with the Power Utility about its equipment and clearances.
- General Notes – Clarification on coordination required with other disciplines work, including any digging task.

E-104
- Power Site Plan – Update on the number, location, and tagging of two (2) Power Utility transformers and a new primary vault, according to the updated MVEC proposal.

E-401
- Enlarged Power Site Plan – Update on the number, location, and tag of two (2) Power Utility transformers and a new primary vault according to the updated MVEC proposal.

E-402
- Enlarged Plan Electrical Room 154 – Update on the underground main low-voltage feeders location and tagging, coming to the main switchboard "MSB1" and the automatic transfer switch "ATS-3".

E-601
- Electrical One-Line Diagram – Update on the number, connection, and tagging of two (2) Power Utility transformers and a new primary vault, according to the updated MVEC proposal.
- One-Line Symbols Legend – Utility primary vault symbol included.
- Feeder-Branch Circuit Schedule – Update on the P001 feeder remark "By MVEC".

E-602
- Feeder-Branch Circuit Schedule – Update on the P001 feeder remark "By MVEC".

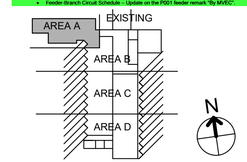

No.	Date	Description
3	03/21/2025	ASI 003

STATE OF TEXAS
MARK ANDREW SISLEN
97234
3-21-2025

Pharr
CITY OF PHARR, TEXAS

GSA
GENERAL SERVICES ADMINISTRATION
819 TAYLOR STREET
FORT WORTH, TEXAS 76102-6195
817-978-3334
www.gsa.gov

© 2018
TEXAS DEPARTMENT OF TRANSPORTATION

halff
5000 WEST MILITARY, SUITE 100, McALLEN, TEXAS 78503
TEL (956) 664-0286 FAX (956) 664-0282 TBPE FIRM #F-312

PHARR FY16 DAP - IMPORT DOCK AND AG LAB IMPROVEMENTS

PLUMBING UNDER FLOOR PLAN - AREA A

SCALE: AS NOTED	SHEET OF			
DN:	CONT	SECT	JOB	HIGHWAY
CK DN:	921	02	424,425,433	PHARR INT. BRIDGE
DW:	DIST		COUNTY	SHEET NO.
CK DW:	PHR		HIDALGO	P-102
TR:				
CK TR:				

AVO# 33135

halff

April 3, 2025
12725.002

ASI 003

Pharr FY16 DAP - Agricultural Lab, Dock Expansion I & II
City of Pharr
GSA & CBP
TxDOT

This Modification shall be considered part of the Bidding/Construction Documents and is issued to change, clarify, add to, delete from, or otherwise modify certain plans and specifications. Where provisions of this Modification differ from those of the original Bidding/Construction Documents, this Modification shall take precedence over the original plans and specifications and shall govern.

CONSTRUCTION DOCUMENT SHEETS

FP-101
- Correction to Key Notes 1 and 2 to refer to the correct civil plan for continuation (Sheet C-402).

P-101
- Correction to Key Note 3 to refer to the correct civil plan for continuation (Sheet C-402).

P-102
- Correction to Key Note 12 to refer to the correct civil plan for continuation (Sheet C-402).

P-901
- Correction to continuation point to refer to Sheet C-402 for waste connection.

P-902
- Correction to continuation point to refer to Sheet C-402 for waste connection.

P-904
- Correction to continuation point to refer to Sheet C-402 for domestic water connection.

E-002
- General Abbreviations – Addition of "Below Finished Grade" (BFG).

E-103
- Power Site Plan – New Power Utility underground primary feeder location and path that includes a new primary vault and two (2) Power Utility transformers, according to the updated MVEC service proposal.
- General Notes – Clarification on coordination required with the Power Utility about its equipment and clearances.
- General Notes – Clarification on coordination required with other disciplines work, including any digging task.

E-104
- Power Site Plan – Update on the number, location, and tagging of two (2) Power Utility transformers and a new primary vault, according to the updated MVEC proposal.

E-401
- Enlarged Power Site Plan – Update on the number, location, and tag of two (2) Power Utility transformers and a new primary vault according to the updated MVEC proposal.

E-402
- Enlarged Plan Electrical Room 154 – Update on the underground main low-voltage feeders location and tagging, coming to the main switchboard "MSB1" and the automatic transfer switch "ATS-3".

E-601
- Electrical One-Line Diagram – Update on the number, connection, and tagging of two (2) Power Utility transformers and a new primary vault, according to the updated MVEC proposal.
- One-Line Symbols Legend – Utility primary vault symbol included.
- Feeder-Branch Circuit Schedule – Update on the P001 feeder remark "By MVEC".

E-602
- Feeder-Branch Circuit Schedule – Update on the P001 feeder remark "By MVEC".

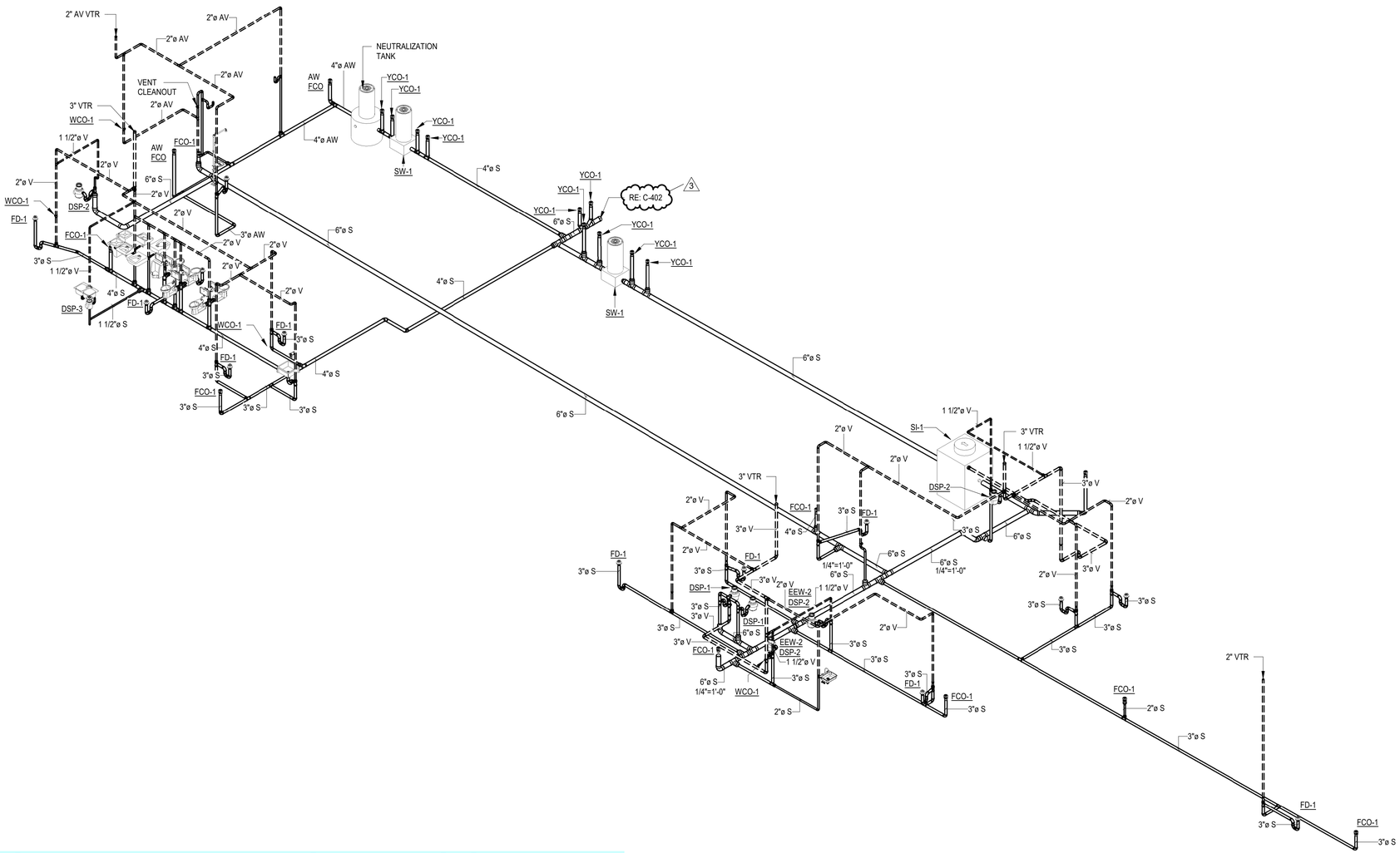

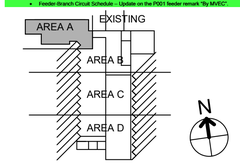

No.	Date	Description
3	03/21/2025	ASI 003

STATE OF TEXAS
MARK ANDREW SISLEN
97234
LICENSED
PROFESSIONAL ENGINEER
3-21-2025

Pharr
CITY OF PHARR, TEXAS

GSA
GENERAL SERVICES ADMINISTRATION
819 TAYLOR STREET
FORT WORTH, TEXAS 76102-6195
817-978-3334
www.gsa.gov

© 2018
TEXAS DEPARTMENT OF TRANSPORTATION

halff
5000 WEST MILITARY, SUITE 100, McALLEN, TEXAS 78503
TEL (956) 664-0286 FAX (956) 664-0282 TBPE FIRM #F-312

does not apply to this change proposal

1 PLUMBING RISER DIAGRAM - WASTE AND VENT - AREA A

PHARR FY16 DAP - IMPORT DOCK AND AG LAB IMPROVEMENTS

PLUMBING RISER DIAGRAMS

SCALE: AS NOTED	SHEET OF			
DN:	CONT	SECT	JOB	HIGHWAY
CK DN:	921	02	424,425,433	PHARR INT. BRIDGE
DW:	DIST	COUNTY		SHEET NO.
CK DW:	PHR	HIDALGO		P-901
TR:				
CK TR:				

AVO# 33135

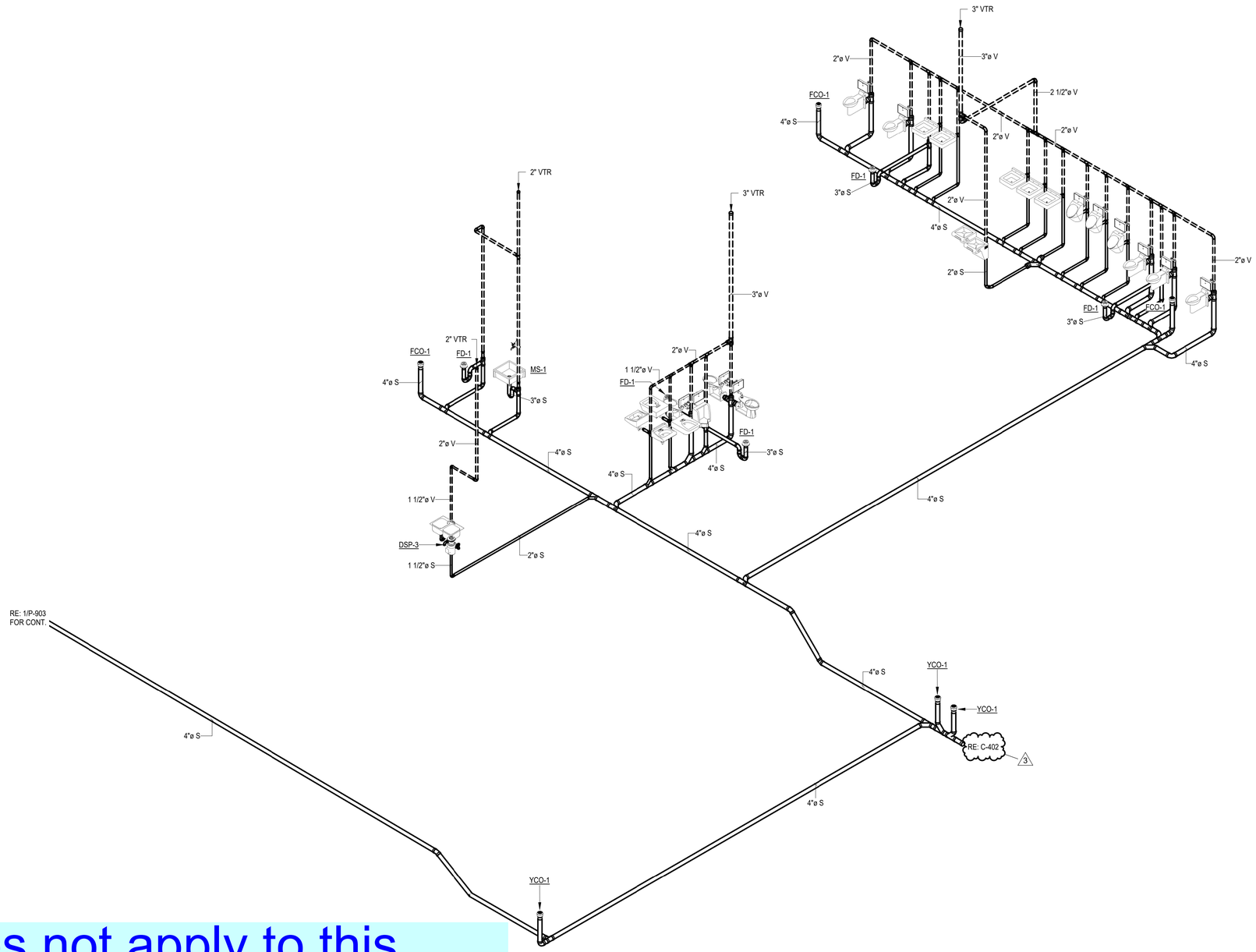

does not apply to this change proposal

1 PLUMBING RISER DIAGRAM - WASTE & VENT - AREA B

halff

April 3, 2025
17315.002

ASI 003
Pharr FY16 DAP - Agricultural Lab, Dock Expansion I & II
City of Pharr
GSA & CBP
TxDOT

This Modification shall be considered part of the Bidding/Construction Documents and is issued to change, add to, delete from, or otherwise explain the plans and specifications. Where provisions of this Modification differ from those of the original Bidding/Construction Documents, this Modification shall take precedence over the original plans and specifications and shall govern.

CONSTRUCTION DOCUMENT SHEETS

FP-101
- Correction to Key Notes 1 and 2 to refer to the correct civil plan for continuation (Sheet C-402).

P-101
- Correction to Key Note 3 to refer to the correct civil plan for continuation (Sheet C-402).

P-102
- Correction to Key Note 12 to refer to the correct civil plan for continuation (Sheet C-402).

P-901
- Correction to continuation point to refer to Sheet C-402 for waste connection.

P-902
- Correction to continuation point to refer to Sheet C-402 for waste connection.

P-904
- Correction to continuation point to refer to Sheet C-402 for domestic water connection.

E-002
- General Abbreviations – Addition of "Below Finished Grade" (BFG).

E-103
- Power Site Plan – New Power Utility underground primary feeder location and path that includes a new primary vault and two (2) Power Utility transformers, according to the updated MVEC service proposal.
- General Notes – Clarification on coordination required with the Power Utility about its equipment and clearances.
- General Notes – Clarification on coordination required with other disciplines work, including any digging task.

E-104
- Power Site Plan – Update on the number, location, and tagging of two (2) Power Utility transformers and a new primary vault, according to the updated MVEC proposal.

E-401
- Enlarged Power Site Plan – Update on the number, location, and tag of two (2) Power Utility transformers and a new primary vault according to the updated MVEC proposal.

E-402
- Enlarged Plan Electrical Room 154 – Update on the underground main low-voltage feeders location and tagging, coming to the main switchboard "MSB1" and the automatic transfer switch "ATS-3".

E-601
- Electrical One-Line Diagram - Update on the number, connection, and tagging of two (2) Power Utility transformers and a new primary vault, according to the updated MVEC proposal.
- One-Line Symbols Legend – Utility primary vault symbol included.
- Feeder-Branch Circuit Schedule – Update on the P001 feeder remark "By MVEC".

E-602
- Feeder-Branch Circuit Schedule – Update on the P001 feeder remark "By MVEC".

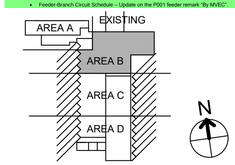

No.	Date	Description
3	03/21/2025	ASI 003

STATE OF TEXAS
MARK ANDREW SISLEN
97234
LICENSED
3-21-2025

Pharr
CITY OF PHARR, TEXAS

GSA
GENERAL SERVICES ADMINISTRATION
819 TAYLOR STREET
FORT WORTH, TEXAS 76102-6195
817-978-3334
www.gsa.gov

© 2018
TEXAS DEPARTMENT OF TRANSPORTATION

halff
5000 WEST MILITARY, SUITE 100, McALLEN, TEXAS 78503
TEL (956) 664-0286 FAX (956) 664-0282 TBPE FIRM #F-312

PHARR FY16 DAP - IMPORT DOCK AND AG LAB IMPROVEMENTS

PLUMBING RISER DIAGRAMS

SCALE: AS NOTED	SHEET OF			
DN:	CONT	SECT	JOB	HIGHWAY
CK DN:	921	02	424,425,433	PHARR INT. BRIDGE
DW:	DIST		COUNTY	SHEET NO.
CK DW:	PHR		HIDALGO	P-902
TR:				
CK TR:				

AVO# 33135

ELECTRICAL GENERAL LEGEND

GENERAL ABBREVIATIONS

ABS	ABOVE BACK SPLASH	MTD	MOUNT OR MOUNTED
ACT	ABOVE COUNTER TOP	MVEC	MAGIC VALLEY ELECTRIC COOP
AFF	ABOVE FINISHED FLOOR		(ELECTRICAL UTILITY COMPANY)
ARS	AREA OF RESCUE SYSTEM		
ASL	ABOVE STAIR LANDING	NC (N.C.)	NORMALLY CLOSED
		NF	NONFUSED
BAS	BUILDING AUTOMATION SYSTEM	NIC	NOT IN CONTRACT
BFC	BELOW FINISHED CEILING	NL	NIGHT LIGHT
BOCT	BOTTOM OF CABLE TRAY	NO (N.O.)	NORMALLY OPEN
BFG	BELOW FINISHED GRADE		
C	CONDUIT	PNL	PANEL BOARD
CB	CIRCUIT BREAKER		
CLG	CEILING	RCPT(S)	RECEPTACLE(S)
CU	COPPER		
		SD	SMOKE DAMPER
EC	EMPTY CONDUIT	SO (S.O.)	SPACE ONLY
EP	ELECTRICAL PRIMARY	SP	SPARE
EX	EXISTING	ST (S.T.)	SHUNT TRIP
		SW	SWITCH
F	FUSE		
FSD	FIRE & SMOKE DAMPER	TYP	TYPICAL
G	GROUND (EQUIPMENT)	UF	UNDERFLOOR
GAP	GENERATOR ANNUNCIATOR PANEL	UG	UNDERGROUND
GFI	GROUND FAULT INTERRUPTER	UNO	UNLESS NOTED OTHERWISE
IC	INTERRUPTING CAPACITY	WG	WIRE GUARD
IG	ISOLATED GROUND	WP	WEATHERPROOF
		WP/WIU	WEATHERPROOF WITH WHILE-IN-USE COVER
LSI	LONG TIME, SHORT TIME, AND	XFMR	TRANSFORMER
	INSTANTANEOUS TRIP SOLID		
	STATE OVERCURRENT DEVICE		

3 ASI #3

ELECTRICAL COORDINATION NOTES

A. ELECTRICAL CONTRACTOR SHALL PROVIDE ALL ROUGH-INS, CONDUITS, PATHWAYS SUPPORTS FOR THE DIVISIONS 27 AND 28. REFER TO DIVISION 27 AND 28 PLANS AND SPECIFICATIONS.
B. THE CONTRACTOR SHALL FULLY REVIEW ALL CABLE TRAY, FIRE ALARM, SECURITY AND TELECOMMUNICATIONS PLANS TO IDENTIFY ALL RESPONSIBILITIES AND SCOPE OF WORK.
C. CONTRACTOR SHALL PROVIDE AUTOCAD AS-BUILT DRAWINGS OF ALL ELECTRICAL AND TELECOMMUNICATION INSTALLATIONS.
D. ELECTRICAL CONTRACTOR SHALL COORDINATE ALL CONDUIT INSTALLATION SO THAT NO PORTION OF CONDUIT IS EXPOSED. EXPOSED CONDUIT IS ACCEPTABLE WHEN RUN AT THE UNDERSIDE OF CANOPIES, ON CMU WALL WITHIN ELECTRICAL/MECHANICAL ROOMS, AND WITHIN ELECTRICAL MECHANICAL YARDS.

ELECTRICAL GENERAL NOTES

ELECTRICAL SITE PLAN NOTES

A. ELECTRICAL CONTRACTOR SHALL CONTACT UTILITY COMPANY SERVICE REPRESENTATIVE AND COORDINATE SERVICE INSTALLATION PRIOR TO COMMENCING WORK.
B. ELECTRICAL CONTRACTOR SHALL INCLUDE IN HIS BID TO OWNER ALL FEES AND CONSTRUCTION COSTS CHARGED BY UTILITY COMPANY FOR MAIN LINE EXTENSIONS AND NEW SERVICE INSTALLATION IN ADDITION TO TRENCHING, SAW CUTTING, AND PATCHING.
C. ELECTRICAL CONTRACTOR SHALL INSTALL ALL UNDERGROUND CONDUIT, CONDUCTORS, AND CABLE AS SPECIFIED IN PROJECT MANUAL.
D. INFORMATION IN ELECTRICAL DRAWINGS HAS BEEN TAKEN FROM RECORD DRAWINGS AND SITE SURVEY. CONTRACTOR SHALL FIELD VERIFY ALL EXISTING CONDITIONS BEFORE COMMENCING WORK AND REPORT ANY AND ALL DISCREPANCIES BETWEEN ACTUAL CONDITIONS AND THESE PLANS TO THE ENGINEER/ARCHITECT IMMEDIATELY.
E. ELECTRICAL CONTRACTOR SHALL INCLUDE IN HIS BID TO OWNER ALL FEES AND CONSTRUCTION COSTS CHARGED BY UTILITY COMPANY FOR MAIN LINE EXTENSIONS AND NEW SERVICE INSTALLATION.
F. ELECTRICAL CONTRACTOR SHALL INSTALL ALL UNDERGROUND CONDUIT, CONDUCTORS, AND CABLE AS SPECIFIED IN PROJECT MANUAL.
G. CONTRACTOR SHALL BE RESPONSIBLE FOR ENABLING ELECTRICAL AND TELECOMMUNICATION SERVICES TO ADJACENT FACILITIES AFFECTED BY THE IMPROVEMENTS OF THIS EXPANSION PROJECT. ELECTRICAL POWER AND TELECOMMUNICATIONS DOWN TIMES SHALL BE KEPT TO A MINIMUM.

ELECTRICAL LIGHTING PLAN NOTES

A. REFER TO ARCHITECTURAL REFLECTED CEILING PLAN (RCP) FOR EXACT LOCATION OF LIGHT FIXTURES. FURNISH FIXTURES WITH TRIM COMPATIBLE WITH THE TYPE OF CEILING AS INDICATED ON THE RCP.
B. CONNECT EXIT/EMERGENCY LIGHTS AND EMERGENCY BALLASTS IN EMERGENCY LIGHTS IN EACH SPACE TO UNSWITCHED HOT LEG OF LOCAL LIGHTING CIRCUIT.
C. COORDINATE PLACEMENT OF FIXTURES WITH ACTUAL INSTALLATION OF MECHANICAL EQUIPMENT AND DUCTWORK.
D. CONTRACTOR SHALL INCLUDE IN HIS BID TO OWNER THE COST OF ALL CONTROL PANELS, DEVICES, NETWORK CABLING AND LOW OR LINE VOLTAGE WIRING FOR A COMPLETE LIGHTING CONTROL SYSTEM AS SPECIFIED. REFER TO MANUFACTURERS WIRING DIAGRAMS AND INSTALLATION MANUALS PRIOR TO BID.
E. CONTROL SYSTEM FOR LIGHTING IS DESIGNED TO MEET 2015 INTERNATIONAL ENERGY CONSERVATION CODE. ALL LIGHT SWITCHES SHALL OPERATE AS BOTH MANUAL AND AUTOMATIC LINE VOLTAGE SWITCHES OR AS MOMENTARY DIGITAL SWITCHES IN CONJUNCTION WITH RELAY CONTROL PANELS, UNLESS OTHERWISE NOTED.
F. ALL CONTROL AND POWER WIRING FOR LIGHTING CONTROL SYSTEM SHALL BE IN CONDUIT.
G. COORDINATE LOCATION OF LIGHTS WITH DIFFUSERS AND GRILLS.
H. COORDINATE PLACEMENT OF FIXTURES WITH ACTUAL INSTALLATION OF MECHANICAL EQUIPMENT AND DUCTWORK.
I. SWITCH LEGS ARE NOT SHOWN WHERE DIGITAL SWITCHES ARE USED TO CONTROL LIGHTS.
J. REFER TO LIGHTING CONTROL RELAY SCHEDULE FOR CIRCUITING OF LIGHT SWITCHES AND LIGHT FIXTURES THROUGH RELAYS IN LIGHTING RELAY PANELS.
K. USE #10 AWG CONDUCTORS FOR 20 AMPERE, 120 VOLT BRANCH CIRCUITS EXCEEDING 100 FEET IN LENGTH.
L. USE #10 AWG CONDUCTORS FOR 20 AMPERE, 277 VOLT BRANCH CIRCUITS EXCEEDING 200 FEET IN LENGTH.
M. CONTRACTOR SHALL PROVIDE ALL POWER PACKS/RELAYS REQUIRED FOR THE LIGHTING SYSTEM.
N. TYPICAL FOR ALL LIGHTS WITH "NL" (NIGHT LIGHT) DESIGNATION. THESE FIXTURES SHALL REMAIN ON ALL THE TIME FOR SAFETY PURPOSES.

ELECTRICAL POWER PLAN NOTES

A. INSTALL AND MAKE FINAL CONNECTIONS OF ELECTRICAL FIXTURES PROVIDED BY CASEWORK CONTRACTOR.
B. MOUNTING HEIGHT OF DEVICES AS PER PROJECT SPECIFICATIONS UNLESS NOTED OTHERWISE.
C. COORDINATE ROUGH-IN LOCATION OF ALL DEVICES WITH ARCHITECTURAL ELEVATIONS DETAILS, AND PLANS.
D. REFER TO ARCHITECTURAL MILLWORK AND ELEVATION PLANS FOR EXACT LOCATION AND MOUNTING HEIGHT OF ALL WIRING DEVICES.
E. ALL PENETRATIONS THROUGH FIRE RATED WALLS SHALL HAVE SOUND RETARDING/ABSORBING FIRE STOP MATERIAL. STI FIRESTOP OR APPROVED EQUAL.
F. USE #10 AWG CONDUCTORS FOR 20AMPERE, 120 VOLT BRANCH CIRCUITS EXCEEDING 100 FEET IN LENGTH.
G. THE CONTRACTOR SHALL FULLY REVIEW ALL ELECTRICAL SPECIAL SYSTEMS PLANS TO IDENTIFY ALL RESPONSIBILITIES AND SCOPE OF WORK.

MECHANICAL & PLUMBING EQUIPMENT NOTES

A. REFER TO MECHANICAL EQUIPMENT CONNECTION SCHEDULE(S) FOR DISCONNECTING MEANS, CONDUIT, WIRING AND ADDITIONAL CONNECTION INFORMATION TO MECHANICAL EQUIPMENT.
B. FOR MECHANICAL EQUIPMENT, FURNISH AND INSTALL BRANCH CIRCUIT AND DISCONNECTING MEANS PER MECHANICAL EQUIPMENT CONNECTION SCHEDULE(S).
C. COORDINATE EXACT LOCATION AND MOUNTING HEIGHT OF ALL POWER SOURCE WIRING IN ACCORDANCE WITH ARCHITECTURAL MILLWORK.
D. CONTRACTOR SHALL VERIFY ALL REQUIREMENTS BEFORE ANY ROUGH-IN IN ORDER TO COORDINATE MANUFACTURER'S DRAWINGS FOR EQUIPMENT LOCATION AND INSTALLATION ACCESSORIES.
E. COORDINATE RUNS FOR CONDUIT UP IN JOIST AND FOR SUSPENDING REQUIREMENTS IN ACCORDANCE STRUCTURAL PLANS.
F. REFER TO DIVISION 23 FOR ALL MECHANICAL EQUIPMENT LOCATION(S). COORDINATE EXACT LOCATION(S) OF ALL MECHANICAL EQUIPMENT WITH MECHANICAL DRAWINGS TO MEET ELECTRICAL AND MECHANICAL REQUIRED CLEARANCE BY THE LATEST CODE.
G. COORDINATE ALL ROOF PENETRATIONS WITH CONTRACTOR AND ALL OTHER TRADES. SEAL ALL ROOF PENETRATIONS AS RECOMMENDED BY THE WARRANTY SYSTEM. VERIFY WITH GENERAL AND ROOFING CONTRACTOR.
H. ELECTRICAL CONTRACTOR SHALL PROVIDE J-BOX AND ONE INCH CONDUIT (1"C) FOR H.V.A.C. CONTROLS AND THERMOSTATS. COORDINATE EXACT LOCATION WITH MECHANICAL CONTRACTOR. REFER TO MECHANICAL PLANS FOR THERMOSTAT LOCATIONS.
I. ELECTRICAL CONTRACTOR SHALL PROVIDE STARTERS, RELAYS, CONTACTORS AND THE REQUIRED ELECTRICAL ACCESSORIES FOR AN OPERABLE MECHANICAL SYSTEM.
J. ALL ELECTRICAL CONDUIT AND WIRING SHALL BE CONCEALED. IF NOT POSSIBLE PROVIDE SURFACE MOUNT STEEL RACEWAY. STEEL RACEWAY SHALL BE WIREMOLD #V2100 SERIES. PROVIDE ALL RELATED #V2100 SERIES ACCESSORIES FOR AN OPERABLE SYSTEM.
K. CONTRACTOR SHALL PROVIDE 120V POWER TO ANY SMOKE DAMPERS REQUIRED AT ALL SMOKE PARTITIONS, INCLUDE A 20A/1P CIRCUIT BREAKER AND WIRING 2#12,#12G,1/2"EMT AS REQUIRED BY HVAC SYSTEM. REFER TO MECHANICAL PLANS. PROVIDE RELAYS FOR FIRE ALARM INTERFACE AS REQUIRED.
L. CONTRACTOR SHALL PROVIDE 120V POWER TO ALL DDC CONTROL PANELS AS REQUIRED BY CONTROLS CONTRACTOR, INCLUDE A 20A/1P CIRCUIT BREAKER AND WIRING 2#12,# 12G,1/2"EMT AS REQUIRED BY HVAC SYSTEM.
M. VERIFY REQUIRED PLUMBING AND MECHANICAL POWER CONNECTION PRIOR TO ROUGH-IN.
N. ALL CABLES SHALL BE PLENUM RATED.
O. BRANCH CIRCUIT VOLTAGE DROP SHALL MEET NATIONAL ELECTRICAL CODE REQUIREMENT, ADJUST AS REQUIRED.

COMMISSIONING NOTES

1. COMMISSIONING AGENCY

A COMMISSIONING AGENCY WILL BE CONTRACTED DIRECTLY WITH AND BY CONTRACTOR FOR THIS PROJECT. THE COMMISSIONING AGENCY HAS OVERALL RESPONSIBILITY FOR PLANNING AND COORDINATING THE COMMISSIONING PROCESS. HOWEVER COMMISSIONING INVOLVES ALL PARTIES TO THE DESIGN AND CONSTRUCTION PROCESS, INCLUDING THE CONTRACTOR.

2. CONTRACTOR RESPONSIBILITY

THE ELECTRICAL SPECIFICATIONS DEFINES THE CONTRACTOR'S RESPONSIBILITIES WITH RESPECT TO THE COMMISSIONING PROCESS. EACH CONTRACTOR AND SUB-CONTRACTOR SHALL REVIEW THE SPECIFICATION SECTIONS, AND SHALL INCLUDE IN THEIR BIDS FOR CARRYING OUT THE WORK DESCRIBED, AS IT APPLIES TO EACH DIVISION AND SECTION OF THOSE SPECIFICATIONS, INDIVIDUALLY AND COLLECTIVELY.

3. DESCRIPTION OF WORK

THE PURPOSE OF THE COMMISSIONING PROCESS IS TO PROVIDE THE OWNER/OPERATOR OF THE FACILITY WITH ASSURANCE THAT THE BUILDING ENVELOPE, MECHANICAL, PLUMBING, AND ELECTRICAL SYSTEMS HAVE BEEN INSTALLED ACCORDING TO THE CONTRACT DOCUMENTS, AND OPERATE WITHIN THE PERFORMANCE GUIDELINES SET OUT IN THE DESIGN INTENT DOCUMENTS AND THE SPECIFICATIONS. THE COMMISSIONING AGENCY WILL PROVIDE THE OWNER WITH AN UNBIASED, OBJECTIVE VIEW OF THE SYSTEM'S INSTALLATION, OPERATION, AND PERFORMANCE. THE COMMISSIONING PROCESS DOES NOT TAKE AWAY OR REDUCE THE RESPONSIBILITY OF THE INSTALLING CONTRACTORS TO PROVIDE A FINISHED PRODUCT THAT IS INSTALLED AND FULLY FUNCTIONAL IN ACCORDANCE WITH THE CONTRACT DOCUMENTS. COMMISSIONING IS INTENDED TO ENHANCE THE QUALITY OF SYSTEM START-UP AND AID IN THE ORDERLY COMPLETION AND TRANSFER OF SYSTEMS FOR BENEFICIAL USE BY THE OWNER. THE COMMISSIONING AGENCY WILL BE THE LEADER OF THE COMMISSIONING TEAM, PLANNING AND COORDINATING ALL COMMISSIONING ACTIVITIES IN CONJUNCTION WITH THE DESIGN PROFESSIONALS, SUBCONTRACTORS, MANUFACTURERS AND EQUIPMENT SUPPLIERS. THE GENERAL CONTRACTOR, MECHANICAL CONTRACTOR, ALL DIVISION 22 AND 23 SUB-CONTRACTORS, AND THE ELECTRICAL CONTRACTOR, DIVISION 26 & 28, SHALL BE RESPONSIBLE FOR COOPERATING, AND COORDINATING THEIR WORK, WITH THE COMMISSIONING AGENCY. EACH SHALL ALSO BE RESPONSIBLE FOR CARRYING OUT ALL THE PHYSICAL ACTIVITIES REQUIRED FOR INSTALLATION OF COMPONENTS AND SYSTEMS AND FOR OPERATING THEM DURING THE COMMISSIONING PROCESS AS REQUIRED BY THE PROJECT SPECIFICATIONS.

4. COMMISSIONING PLAN

THE PROJECT COMMISSIONING PLAN SHALL BE DEVELOPED BY THE COMMISSIONING AGENCY AND SHALL INCLUDE THE FOLLOWING:

A. A NARRATIVE DESCRIPTION OF THE ACTIVITIES THAT WILL BE ACCOMPLISHED DURING EACH PHASE OF COMMISSIONING, INCLUDING THE PERSONNEL INTENDED TO ACCOMPLISH EACH OF THE ACTIVITIES.
B. A LISTING OF THE SPECIFIC EQUIPMENT OR SYSTEMS TO BE TESTED AND A DESCRIPTION OF THE TESTS TO BE PERFORMED.
C. FUNCTIONS TO BE TESTED INCLUDING CALIBRATIONS AND ECONOMIZER CONTROLS. OTHER TEST LISTED ON THE CONSTRUCTION DOCUMENTS.
D. CONDITIONS UNDER WHICH THE TEST WILL BE PERFORMED. TESTING SHALL AFFIRM WINTER AND SUMMER DESIGN CONDITIONS AND FULL OUTSIDE AIR CONDITIONS.
E. MEASURABLE CRITERIA FOR PERFORMANCE.

REFER TO PROJECT SPECIFICATIONS FOR ADDITIONAL COMMISSIONING PLAN REQUIREMENTS.

5. PROJECT CLOSEOUT PROCEDURES

CONTRACTOR SHALL CERTIFY THAT LIGHTING CONTROLS ARE INSTALLED PER SECTION 405 AND PROVIDE TESTING PER PARAGRAPH C408.3 OF THE 2015 INTERNATIONAL ENERGY CONSERVATION CODE . LIGHTING AND FUNCTIONAL TESTING OF CONTROLS AND AUTOMATIC LIGHTING SYSTEMS SHALL INCLUDE: OCCUPANCY SENSOR CONTROLS, TIME SWITCH CONTROLS, AND DAYLIGHT RESPONSIVE CONTROLS.

6. REQUIRED DOCUMENTS

THE FOLLOWING DOCUMENTS SHALL BE PROVIDED TO THE BUILDING OWNER WITHIN 90 DAYS OF THE RECEIPT OF THE CERTIFICATE OF OCCUPANCY.

A. FINAL AS BUILT DRAWINGS
B. OPERATING AND MAINTENANCE MANUALS
C. FINAL CERTIFIED TEST REPORT REPORTS FOR LIGHTING AND CONTROLS
D. FINAL COMMISSIONING REPORT

THE GENERAL CONTRACTOR AND SUB-CONTRACTORS SHALL INCLUDE IN THEIR BIDS ALL COST ASSOCIATED WITH ROUGH-IN AND CABLING FOR POWER, DATA, CCTV, AND A/V SYSTEMS

halff

April 3, 2025
57325.002

ASI 003
Pharr FY16 DAP - Agricultural Lab, Dock Expansion I & II
City of Pharr
GSA & CBP
TxDOT

This Modification shall be considered part of the Bidding/Construction Documents and is issued to change, amplify, add to, delete from, or otherwise explain the plans and specifications. Where provisions of this Modification differ from those of the original Bidding/Construction Documents, this Modification shall take precedence over the original plans and specifications and shall govern.

CONSTRUCTION DOCUMENT SHEETS

FP-101
- Correction to Key Notes 1 and 2 to refer to the correct civil plan for continuation (Sheet C-402).

P-101
- Correction to Key Note 3 to refer to the correct civil plan for continuation (Sheet C-402).

P-102
- Correction to Key Note 12 to refer to the correct civil plan for continuation (Sheet C-402).

P-901
- Correction to continuation point to refer to Sheet C-402 for waste connection.

P-902
- Correction to continuation point to refer to Sheet C-402 for waste connection.

P-904
- Correction to continuation point to refer to Sheet C-402 for domestic water connection.

E-002
- General Abbreviations – Addition of "Below Finished Grade" (BFG).

E-103
- Power Site Plan – New Power Utility underground primary feeder location and path that includes a new primary vault and two (2) Power Utility transformers, according to the updated MVEC service proposal.
- General Notes – Clarification on coordination required with the Power Utility about its equipment and clearances.
- General Notes – Clarification on coordination required with other disciplines work, including any digging task.

E-104
- Power Site Plan – Update on the number, location, and tagging of two (2) Power Utility transformers and a new primary vault, according to the updated MVEC proposal.

E-401
- Enlarged Power Site Plan – Update on the number, location, and tag of two (2) Power Utility transformers and a new primary vault according to the updated MVEC proposal.

E-402
- Enlarged Plan Electrical Room 154 – Update on the underground main low-voltage feeders location and tagging, coming to the main switchboard "MSB1" and the automatic transfer switch "ATS-3".

E-601
- Electrical One-Line Diagram - Update on the number, connection, and tagging of two (2) Power Utility transformers and a new primary vault, according to the updated MVEC proposal.
- One-Line Symbols Legend – Utility primary vault symbol included.
- Feeder-Branch Circuit Schedule – Update on the P001 feeder remark "By MVEC".

E-602
- Feeder-Branch Circuit Schedule – Update on the P001 feeder remark "By MVEC".

REVISION		
NO.	DATE	DESCRIPTION
3	03/18/2025	RFI #34 - ELECTRICAL PRIMARY SERVICE

STATE OF TEXAS
GABRIEL BENAVIDES JR.
119255
LICENSED
PROFESSIONAL ENGINEER
03/18/2025

Pharr
CITY OF PHARR, TEXAS

GENERAL SERVICES ADMINISTRATION
819 TAYLOR STREET
FORT WORTH, TEXAS 76102-6195
817-978-3334
www.gsa.gov

©2018
TEXAS DEPARTMENT OF TRANSPORTATION

HALFF
5000 WEST MILITARY, SUITE 100, McALLEN, TEXAS 78503
TEL (956) 664-0286 FAX (956) 664-0282 TBPE FIRM #F-312

PHARR FY16 DAP - IMPORT DOCK AND AG LAB IMPROVEMENTS

ELECTRICAL NOTES & ABBREVIATIONS

SCALE: AS NOTED	SHEET OF			
DN:	CONT	SECT	JOB	HIGHWAY
CK DN:				
DW:	921	02	424,425,433	PHARR INT. BRIDGE
CK DW:	DIST	COUNTY		SHEET NO.
TR:				
CK TR:	PHR	HIDALGO		E-002

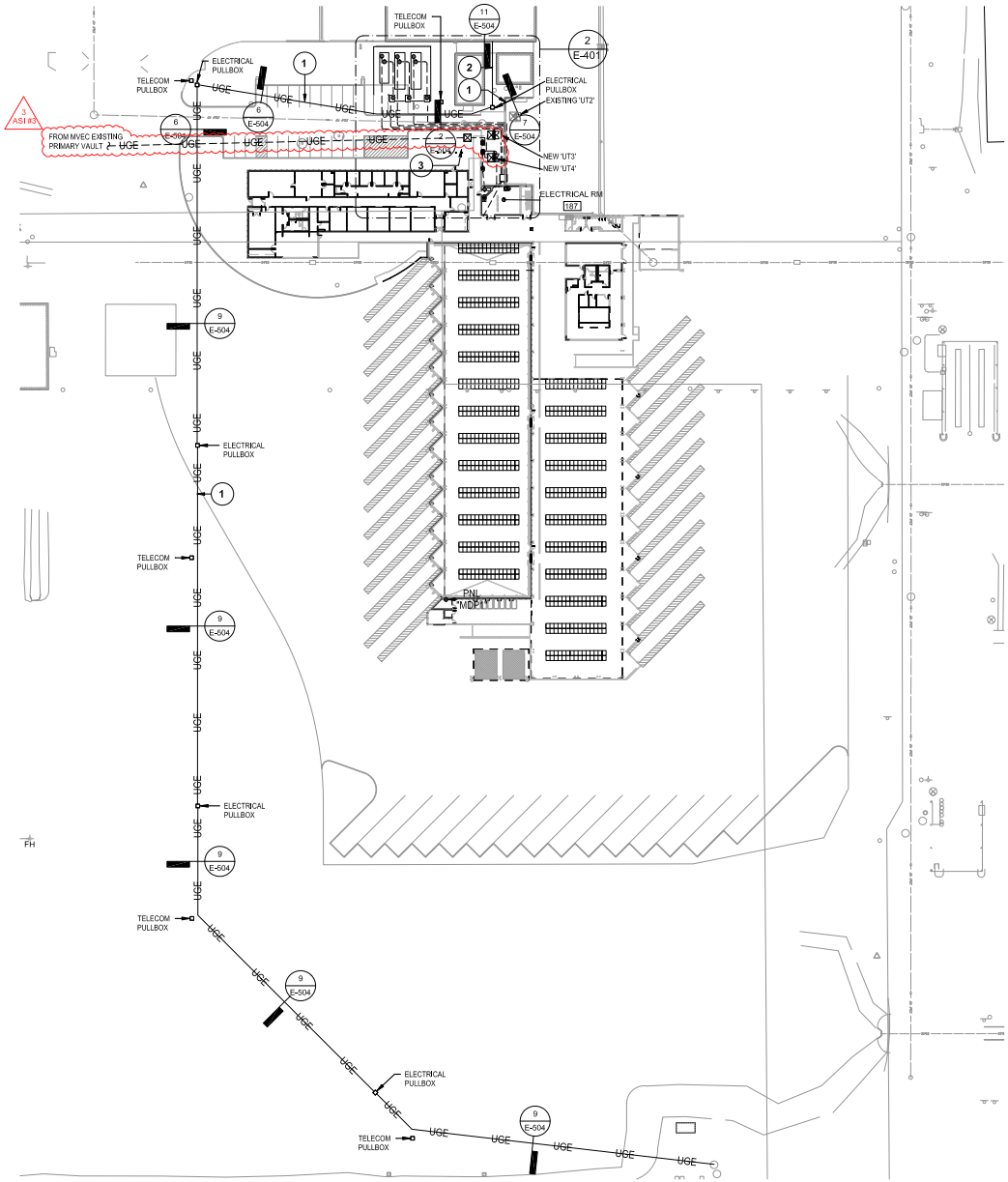

1 ELECTRICAL POWER SITE PLAN
1" = 50'-0"

GENERAL NOTES:

A. REFER TO SHEET E-002 FOR GENERAL NOTES.
B. THE CONTRACTOR SHALL COORDINATE WITH THE POWER UTILITY THE FINAL LOCATION OF PRIMARY VAULTS, TRANSFORMERS, CT ENCLOSURES, METER BASES AND FEEDERS AS WELL AS ALL REQUIRED CLEARANCES.
C. PRIOR TO COMMENCING ANY WORK, THE CONTRACTOR SHALL COORDINATE WITH ALL DISCIPLINES THE LOCATION OF THE ELECTRICAL EQUIPMENT, AS WELL AS ANY DIGGING TASK (FEEDER PATHS) TO AVOID FACILITY PIPING DAMAGE (WATER, GAS, SEWER, ETC.).

ASI #2

KEY NOTES: 1

1. NEW UNDERGROUND POWER FEEDERS FOR EXISTING COMMERCIAL NORTH BOUND LANES, SEE CIVIL DRAWINGS C700, AND C710 FOR DETAILS, AND FOR UTILITY COORDINATION AND CORRIDOR ROUTING. NEW DUCT BANK SHALL CONTAIN THE FOLLOWING ELECTRICAL FEEDERS:
   A. (1) 4"C WITH 4#500KCMIL & 1#3G.
   B. (1) 4"C WITH 4#300KCMIL & 1#4G.
   C. (1) 4"C SPARE.
   REFER TO TELECOMMUNICATION DRAWINGS FOR ADDITIONAL TELECOM RACEWAY REQUIREMENTS.
2. (1) 4"C WITH 4#300KCMIL & 1#4G ROUTED INTO EXISTING BUILDING, BRANCH FEEDER GOES TO EXISTING PANEL 'E1H'.
3. MVEC NEW PRIMARY VAULT.

LEGEND:

UGE UGE — NEW UNDERGROUND ELECTRICAL CONDUIT.

AVO# 33135

halff

April 3, 2025
67335.002

ASI 003

Pharr FY16 DAP - Agricultural Lab, Dock Expansion I & II
City of Pharr
GSA & CBP
TxDOT

This Modification shall be considered part of the Bidding/Construction Documents and is issued to change, amplify, add to, delete from, or otherwise revise the plans and specifications. Where provisions of this Modification differ from those of the original Bidding/Construction Documents, this Modification shall take precedence over the original plans and specifications and shall govern.

CONSTRUCTION DOCUMENT SHEETS

FP-201
- Correction to Key Notes 1 and 2 to refer to the correct civil plan for continuation (Sheet C-450).

P-101
- Correction to Key Note 3 to refer to the correct civil plan for continuation (Sheet C-450).

P-102
- Correction to Key Note 12 to refer to the correct civil plan for continuation (Sheet C-450).

P-201
- Correction to continuation point to refer to Sheet C-402 for waste connection.

P-202
- Correction to continuation point to refer to Sheet C-402 for waste connection.

P-203
- Correction to continuation point to refer to Sheet C-402 for domestic water connection.

E-002
- General Abbreviations – Addition of "Below Finished Grade" (BFG).

E-103
- Power Site Plan – New Power Utility underground primary feeder location and path that includes a new primary vault and two (2) Power Utility transformers, according to the updated MVEC service proposal.
- General Notes – Clarification on coordination required with the Power Utility about its equipment and clearances.
- General Notes – Clarification on coordination required with other disciplines work, including any digging task.

E-104
- Power Site Plan – Update on the number, location, and tagging of two (2) Power Utility transformers and a new primary vault, according to the updated MVEC proposal.

E-401
- Enlarged Power Site Plan – Update on the number, location, and tag of two (2) Power Utility transformers and a new primary vault according to the updated MVEC proposal.

E-402
- Enlarged Plan Electrical Room 1S4 – Update on the underground main low-voltage feeders location and tagging, coming to the main switchboard "MDB" and the automatic transfer switch "ATS-3".

E-501
- Electrical One-Line Diagram - Update on the number, connection, and tagging of two (2) Power Utility transformers and a new primary vault, according to the updated MVEC proposal.
- One-Line Symbols Legend – Utility primary vault symbol included.
- Feeder-Branch Circuit Schedule – Update on the P001 feeder remark "By MVEC".

E-502
- Feeder-Branch Circuit Schedule – Update on the P001 feeder remark "By MVEC".

N

REVISION		
NO.	DATE	DESCRIPTION
3	03/18/2025	RFI #34 - ELECTRICAL PRIMARY SERVICE

STATE OF TEXAS
GABRIEL BENAVIDES JR.
119255
LICENSED
PROFESSIONAL ENGINEER

03/18/2025

Pharr
CITY OF PHARR, TEXAS

GSA
GENERAL SERVICES ADMINISTRATION
819 TAYLOR STREET
FORT WORTH, TEXAS 76102-6195
817-978-3334
www.gsa.gov

TEXAS DEPARTMENT OF TRANSPORTATION

HALFF
5000 WEST MILITARY, SUITE 100, McALLEN, TEXAS 78503
TEL (956) 664-0286 FAX (956) 664-0282 TBPE FIRM #F-312

PHARR FY16 DAP - IMPORT DOCK AND AG LAB IMPROVEMENTS

ELECTRICAL POWER SITE PLAN

SCALE: AS NOTED	SHEET OF			
DRC	CONT	SECT	JOB	HIGHWAY
CK DRG	921	02	424,425,433	PHARR INT. BRIDGE
DWG	DIST		COUNTY	SHEET NO.
CK DWG	PHR		HIDALGO	E-103
TRS				
CK TRS				

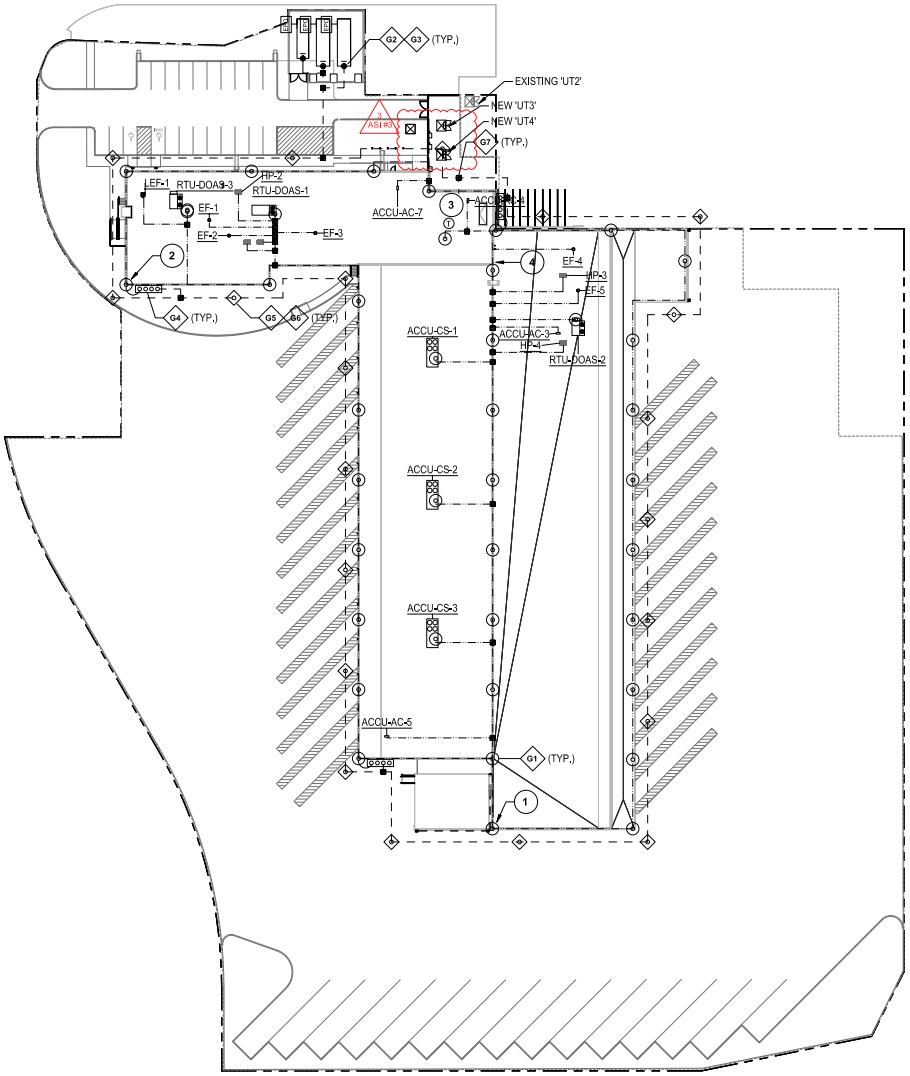

ELECTRICAL LIGHTNING PROTECTION AND GROUNDING SITE PLAN

1 1" = 40'-0"

GENERAL NOTES:

A. REFER TO SHEET E-002 FOR GENERAL NOTES.
B. LIGHTNING PROTECTION AND GROUNDING LOOP IS SHOWN FOR ESTIMATING PURPOSES ONLY. CONTRACTOR SHALL PROVIDE IN BID TO OWNER ALL COST OF MATERIAL AND LABOR FOR A COMPLETE AND FUCTIONAL LIGHTNING PROTECTION AND GROUND LOOP SYSTEM BY AN LPI (LIGHTNING PROTECTION INSTITUTE) INSTALLER. REFER TO SPECIFICATION SECTION 26 41 13 FOR ADDITIONAL REQUIREMENTS.

KEY NOTES:

1. BOND LIGHTNING AIR TERMINAL TO STRUCTURE COLUMN.
2. ROUTE GROUND CONDUCTOR FROM AIR TERMINAL TO GROUND BUS WITHIN CMU WALL.
3. TIE GROUND LOOP TO MAIN GROUND BAR AND MSB-1 LOCATION AT MAIN ELECTRICAL ROOM. REFER TO SHEET E-402 FOR 'MGB' LOCATION.
4. PROVIDE WITH THERMOWELD TAP FOR DIFFERENT LEVEL ROOF TRANSITIONS.

LEGEND:

- LIGHTNING BARE CONDUCTOR
- #2/0 GROUNDING RING CONDUCTOR
- LIGHTNING PROTECTION - AIR TERMINAL ASSEMBLY
- GROUND ROD
- EQUIPMENT GROUNDING POINT
- GROUND LOOP THERMOWELD FOR GROUND CONDUCTOR TAP
- GROUND BUS
- # INDICATES GROUNDING DETAIL. REFER TO SHEETS EP505 AND EP506

AVO# 33135

halff

April 3, 2025
67335.002

ASI 003

Pharr FY16 DAP - Agricultural Lab, Dock Expansion I & II
City of Pharr
GSA & CBP
TxDOT

This Modification shall be considered part of the Bidding/Construction Documents and is issued to change, amplify, add to, delete from, or otherwise explain the plans and specifications. Where provisions of this Modification differ from those of the original Bidding/Construction Documents, this Modification shall take precedence over the original plans and specifications and shall govern.

CONSTRUCTION DOCUMENT SHEETS

FP-101
- Correction to Key Notes 1 and 2 to refer to the correct civil plan for continuation (Sheet C-402).

P-101
- Correction to Key Note 3 to refer to the correct civil plan for continuation (Sheet C-402).

P-102
- Correction to Key Note 12 to refer to the correct civil plan for continuation (Sheet C-402).

P-401
- Correction to continuation point to refer to Sheet C-402 for waste connection.

P-402
- Correction to continuation point to refer to Sheet C-402 for waste connection.

P-404
- Correction to continuation point to refer to Sheet C-402 for domestic water connection.

E-002
- General Abbreviations – Addition of "Below Finished Grade" (BFG).

E-103
- Power Site Plan – New Power Utility underground primary feeder location and path that includes a new primary vault and two (2) Power Utility transformers, according to the updated MVEC service proposal.
- General Notes – Clarification on coordination required with the Power Utility about its equipment and clearances.
- General Notes – Clarification on coordination required with other disciplines work, including any digging task.

E-104
- Power Site Plan – Update on the number, location, and tagging of two (2) Power Utility transformers and a new primary vault, according to the updated MVEC proposal.

E-401
- Enlarged Power Site Plan – Update on the number, location, and tag of two (2) Power Utility transformers and a new primary vault according to the updated MVEC proposal.

E-402
- Enlarged Plan Electrical Room 154 – Update on the underground main low-voltage feeders location and tagging, coming to the main switchboard "MSB1" and the automatic transfer switch "ATS-2".

E-501
- Electrical One-Line Diagram – Update on the number, connection, and tagging of two (2) Power Utility transformers and a new primary vault, according to the updated MVEC proposal.
- One-Line Symbols Legend – Utility primary vault symbol included.
- Feeder-Branch Circuit Schedule – Update on the P001 feeder remark "By MVEC".

E-502
- Feeder-Branch Circuit Schedule – Update on the P001 feeder remark "By MVEC".

N

REVISION		
NO.	DATE	DESCRIPTION
3	03/18/2025	RFI #34 - ELECTRICAL PRIMARY SERVICE

STATE OF TEXAS
GABRIEL BENAVIDES JR.
119255
LICENSED
PROFESSIONAL ENGINEER

03/18/2025

Pharr
CITY OF PHARR, TEXAS

GSA
GENERAL SERVICES ADMINISTRATION
819 TAYLOR STREET
FORT WORTH, TEXAS 76102-6195
817-978-3334
www.gsa.gov

TEXAS DEPARTMENT OF TRANSPORTATION

HALFF
5000 WEST MILITARY, SUITE 100, McALLEN, TEXAS 78503
TEL (956) 664-0286 FAX (956) 664-0282 TBPE FIRM #F-312

PHARR FY16 DAP - IMPORT DOCK AND AG LAB IMPROVEMENTS

ELEC. LIGHTNING PRO. & GRND. SITE PLAN

SCALE: AS NOTED	SHEET OF			
DRC	CONT	SECT	JOB	HIGHWAY
CK DRG	921	02	424,425,433	PHARR INT. BRIDGE
DWG	DIST		COUNTY	SHEET NO.
CK DWG	PHR		HIDALGO	E-104
TRS				
CK TRS				

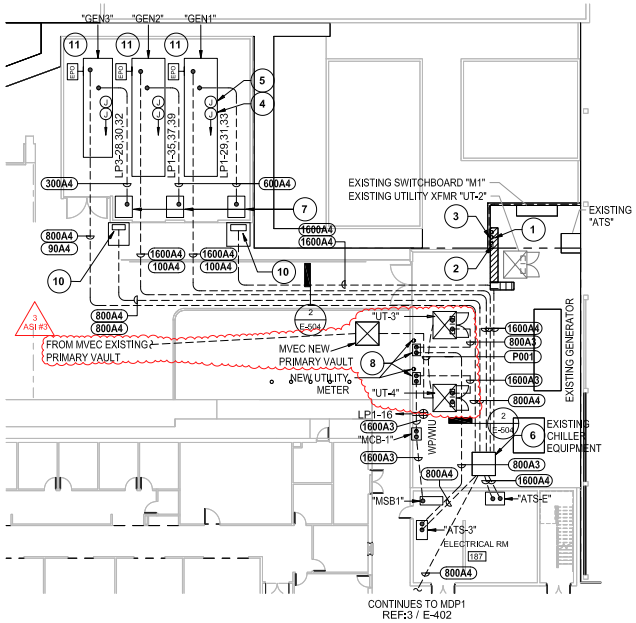

ENLARGED ELECTRICAL POWER SITE PLAN - ELECTRICAL YARD

(2) 1/16" = 1'-0"

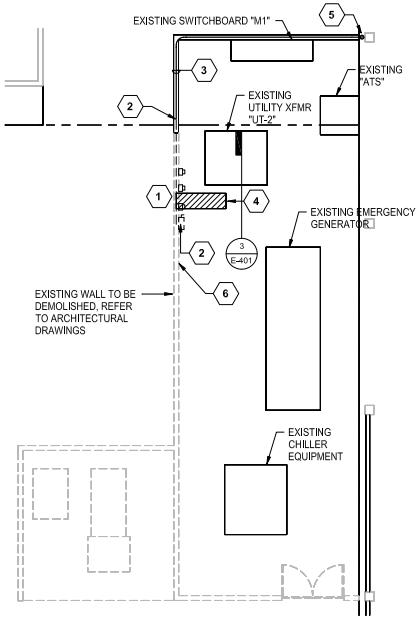

ENLARGED EXISTING ELECTRICAL POWER SITE PLAN - ELECTRICAL YARD

(1) 1/8" = 1'-0"

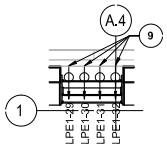

ENLARGED ELECTRICAL POWER PLAN - HOOD DETAIL

(4) 1/4" = 1'-0"

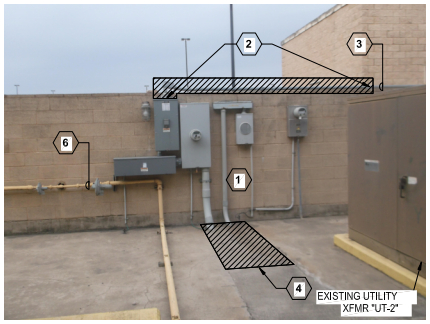

EXISTING ELECTRICAL EQUIPMENT

(3) N.T.S.

GENERAL NOTES:

A. REFER TO SHEET E-002 FOR GENERAL NOTES.

DEMOLITION KEY NOTES: (#)

1. EXISTING ELECTRICAL SERVICE EQUIPMENT TO BE RELOCATED.
2. DISCONNECT EXISTING CONDUIT FROM ENCLOSED CIRCUIT BREAKER. REMOVE ENOUGH CONDUIT TO ALLOW FOR THE DEMOLITION OF EXISTING WALL.
3. EXISTING CONDUIT TO REMAIN. CONTRACTOR SHALL COORDINATE WITH DEMOLITION CONTRACTOR THE AMOUNT OF CONDUIT TO BE REMOVED TO ALLOW FOR DEMOLITION OF EXISTING WALL, ELECTRICAL CIRCUIT WIRING SHALL REMAIN, STEPS SHOULD BE TAKEN TO PROTECT WIRING FROM DAMAGE.
4. SAW CUT EXISTING CONCRETE SLAB TO REMOVE ALL UNDERGROUND CONDUIT ASSOCIATED TO EXISTING ELECTRICAL EQUIPMENT TO BE RELOCATED. CONTRACTOR SHALL FIELD VERIFY AND DOCUMENT ALL EXISTING CONDUIT AND WIRING PRIOR TO REMOVAL/DISCONNECTION. EXTEND CONDUIT TO NEW SERVICE METER LOCATION. REFER TO DETAIL #2 ON THIS SHEET FOR REQUIREMENTS.
5. CONDUIT CONTINUES TO ABOVE. CONTRACTOR SHALL FIELD VERIFY EQUIPMENT BEING FED FROM THIS FEEDER. CONTRACTOR SHALL COORDINATE THE POWER OUTAGE WITH CBP AND GSA A MINIUM OF 15 WORKING DAYS IN ADVANCE, POWER DOWN TIME SHALL BE KEPT TO A MINIMUM AND CONDUCTED DURING NON-OPERATING HOURS.
6. GENERATOR GAS LINE TO BE RE-LOCATED. REFER TO PLUMBING DRAWINGS FOR REQUIREMENTS.

KEY NOTES: (#)

1. REINSTALL EXISTING ELECTRICAL SERVICE EQUIPMENT ON WALL AT APPROXIMATE LOCATION SHOWN. CONTRACTOR SHALL COORDINATE WITH OWNER NEW EQUIPMENT LOCATION PRIOR TO REINSTALLATION OF EXISTING EQUIPMENT.
2. RE-CONNECT EXISTING ELECTRICAL CIRCUIT CONDUIT AND WIRING TO RELOCATED ENCLOSED CIRCUIT BREAKER. CONTRACTOR SHALL PROVIDE ALL REQUIRED CONDUIT ACCESSORIES. CABLING SHALL BE TESTED PER SPECIFICATIONS.
3. EXTEND SAW CUT SECTION OF CONCRETE TO ALLOW FOR EXTENSION OF EXISTING ELECTRICAL FEEDERS TO NEW ELECTRICAL SERVICE EQUIPMENT LOCATION. CONTRACTOR SHALL RESTORE CONCRETE FINISH TO IT'S ORIGINAL STATE.
4. TYPICAL OF ALL GENERATOR SETS. ROUTE CONDUIT FOR GENERATOR LOAD CENTER PARALLEL TO GENERATOR FEEDER.
5. TYPICAL OF ALL GENERATOR SETS, FURNISH AND INSTALL 2" CONDUIT FOR START/STOP ATS CONTROL CIRCUIT. PROVIDE CONTROL WIRING AS REQUIRED. ROUTE CONDUIT PARALLEL TO GENERATOR FEEDER.
6. PROVIDE ELECTRICAL IN GROUND PULLBOX. MINIMUM DIMENSIONS: 60"X60"X48".
7. DEDICATED LOAD BANKS FOR GENERATORS, COORDINATE CONDUIT STUB-UP LOCATION WITH MANUFACTURER'S DRAWINGS.
8. PROVIDE CT ENCLOSURE WITH DIMENSION, MATERIAL, CABLING, AND CONDUIT ROUGH-IN AS REQUIRED BY MVEC. CONTRACTOR SHALL COORDINATE WITH MVEC FOR REQUIREMENTS AND COST.
9. COORDINATE LOCATION OF RECEPTACLE DEVICES WITH HOOD INSTALLER AND OWNER PRIOR TO ROUGH-IN.
10. PROVIDE CONCRETE PAD MOUNT FOR EMERGENCY GENERATOR DOCKING STATION. PROVIDE CONDUIT FOR DOCKING STATIONS AS SHOWN IN ONE-LINE DIAGRAM. REFER TO SHEET E-601.
11. FIELD COORDINATE MOUNTING OF EMERGENCY PUSH OFF SWITCH ON CATWALK OF GENERATOR. TYPICAL FOR GEN-1,2 AND 3.

GENERATOR COORDINATION:

CONTRACTOR SHALL INCLUDE DIMENSIONED SHOP DRAWING SUBMITTAL WITH GENERATOR CLEARANCES, CONDUIT WINDOW, AND REQUIRED MODIFICATIONS TO EQUIPMENT LOCATIONS. MODIFICATIONS TO CONCRETE SLAB AND/OR EQUIPMENT HOUSE KEEPING PADS, CONDUIT EXTENSIONS, AND SCREEN WALL ADJUSTMENTS SHALL BE DONE AT NO EXTRA COST TO OWNER. BASIS OF DESIGN GENERATOR MANUFACTURE IS ONAN CUMMINS. EQUAL GENERATOR MANUFACTURES SHALL MEET ALL PERFORMANCE REQUIREMENTS SPECIFIED IN SECTION 26 32 13, AND GENERATOR YARD CLEARANCE CONSTRAINTS. NO EXCEPTIONS.

AVO# 33135

halff

April 3, 2025
97926.000

ASI 003
Pharr FY16 DAP - Agricultural Lab, Dock Expansion I & II
City of Pharr
GSA & CBP
TxDOT

This Modification shall be considered part of the Bidding/Construction Documents and is issued to change, amplify, add to, delete from, or otherwise explain the plans and specifications. Where provisions of this Modification differ from those of the original Bidding/Construction Documents, this Modification shall take precedence over the original plans and specifications and shall govern.

CONSTRUCTION DOCUMENT SHEETS

FP-101
- Correction to Key Notes 1 and 2 to refer to the correct civil plan for continuation (Sheet C-402).

E-101
- Correction to Key Note 3 to refer to the correct civil plan for continuation (Sheet C-402).

E-102
- Correction to Key Note 12 to refer to the correct civil plan for continuation (Sheet C-402).

E-401
- Correction to continuation point to refer to Sheet C-402 for waste connection.

E-402
- Correction to continuation point to refer to Sheet C-402 for waste connection.

E-404
- Correction to continuation point to refer to Sheet C-402 for domestic water connection.

E-002
- General Abbreviations – Addition of "Below Finished Grade" (BFG).

E-103
- Power Site Plan – New Power Utility underground primary feeder location and path that includes a new primary vault and two (2) Power Utility transformers, according to the updated MVEC service proposal.
- General Notes – Clarification or coordination required with the Power Utility about its equipment and clearances.
- General Notes – Clarification or coordination required with other disciplines work, including any digging task.

E-104
- Power Site Plan – Update on the number, location, and tagging of two (2) Power Utility transformers and a new primary vault, according to the updated MVEC proposal.

E-401
- Enlarged Power Site Plan – Update on the number, location, and tag of two (2) Power Utility transformers and a new primary vault according to the updated MVEC proposal.

E-402
- Enlarged Plan Electrical Room 154 – Update on the underground main low-voltage feeders location and tagging, coming to the main switchboard "MSB1" and the automatic transfer switch "ATS-3".

E-601
- Electrical One-Line Diagram - Update on the number, connection, and tagging of two (2) Power Utility transformers and a new primary vault, according to the updated MVEC proposal.
- One-Line Symbols Legend – Utility primary vault symbol included.
- Feeder-Branch Circuit Schedule – Update on the P001 feeder remark "By MVEC".

E-602
- Feeder-Branch Circuit Schedule – Update on the P001 feeder remark "By MVEC".

N

REVISION		
NO.	DATE	DESCRIPTION
3	03/18/2025	RFI #34 - ELECTRICAL PRIMARY SERVICE

STATE OF TEXAS
GABRIEL BENAVIDES JR.
119255
LICENSED
PROFESSIONAL ENGINEER

03/18/2025

Pharr
CITY OF PHARR, TEXAS

GSA
GENERAL SERVICES ADMINISTRATION
819 TAYLOR STREET
FORT WORTH, TEXAS 76102-6195
817-978-3334
www.gsa.gov

TEXAS DEPARTMENT OF TRANSPORTATION

HALFF
5000 WEST MILITARY, SUITE 100, McALLEN, TEXAS 78503
TEL (956) 664-0286 FAX (956) 664-0282 TBPE FIRM #F-312

PHARR FY16 DAP - IMPORT DOCK AND AG LAB IMPROVEMENTS

ENLARGED ELECTRICAL PLANS

SCALE: AS NOTED	SHEET OF			
DRC	CONT	SECT	JOB	HIGHWAY
CK DRG	921	02	424,425,433	PHARR INT. BRIDGE
DWG	DIST		COUNTY	SHEET NO.
CK DWG	PHR		HIDALGO	E-401
TRS				
CK TRS				

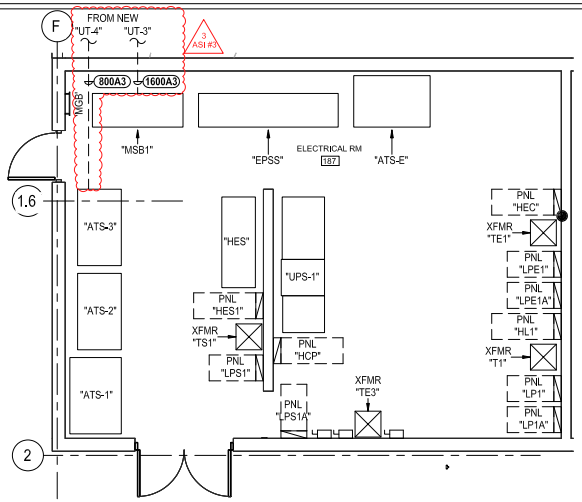

2 ELECTRICAL ENLARGED PLAN - ELECTRICAL ROOM 154
1/4" = 1'-0"

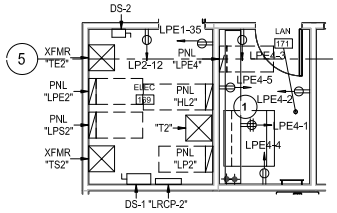

1 ELECTRICAL ENLARGED PLAN - ELECTRICAL ROOM 169
1/4" = 1'-0"

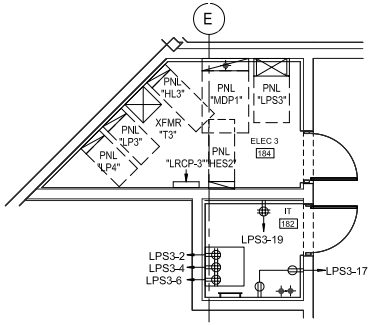

3 ELECTRICAL ENLARGED PLAN - ELECTRICAL ROOM 184
1/4" = 1'-0"

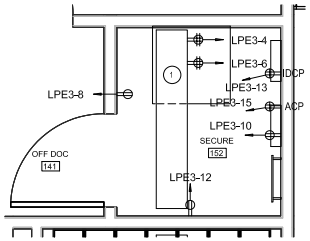

4 ELECTRICAL ENLARGED POWER PLAN - SECURE 152
1/2" = 1'-0"

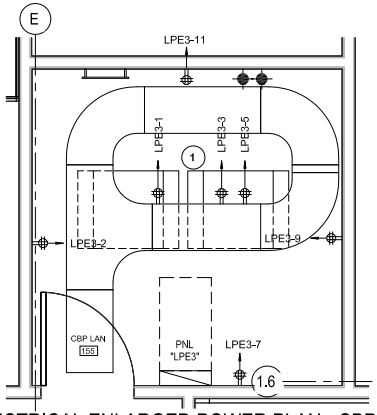

6 ELECTRICAL ENLARGED POWER PLAN - CBP LAN 155
1/2" = 1'-0"

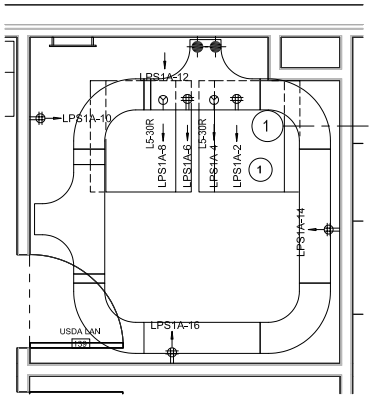

5 ELECTRICAL ENLARGED POWER PLAN - USDA LAN 139
1/2" = 1'-0"

GENERAL NOTES:

A. REFER TO SHEET E-002 FOR GENERAL NOTES.
B. ALL FREE STANDING ELECTRICAL EQUIPMENT SHALL BE PROVIDED WITH A 3-INCH CONCRETE HOUSE KEEPING PAD.
C. ALL ELECTRICAL EQUIPMENT SHALL BE LABELED WITH CALCULATED SHORT CIRCUIT, ARC FLASH (INCIDENT ENERGY) POWER SYSTEM ANALYSIS RESULTS AS PER SPECIFICATION MANUAL.

AVO# 33135

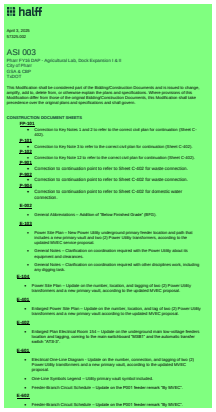
halff

April 3, 2025
97329.002

ASI 003

Phase II Pharr Lot - Agricultural Lab, Dock Expansion I & II
City of Pharr
Ector & Cliff
TxDOT

This Modification shall be considered part of the Bidding/Construction Documents and is issued to change, amplify, add to, delete from, or otherwise explain the plans and specifications. Where provisions of the Modification differ from those of the original Bidding/Construction Documents, this Modification shall take precedence over the original plans and specifications and shall govern.

CONSTRUCTION DOCUMENT SHEETS:

P-101
- Correction to Key Notes 1 and 2 to refer to the correct civil plan for continuation (Sheet C-402).

P-102
- Correction to Key Note 3 to refer to the correct civil plan for continuation (Sheet C-402).

P-103
- Correction to Key Note 12 to refer to the correct civil plan for continuation (Sheet C-402).

P-201
- Correction to continuation point to refer to Sheet C-402 for waste connection.

P-202
- Correction to continuation point to refer to Sheet C-402 for waste connection.

P-203
- Correction to continuation point to refer to Sheet C-402 for domestic water connection.

E-001
- General Abbreviations – Addition of "Below Finished Grade" (BFG).

E-101
- Power Site Plan – New Power Utility underground primary feeder location and path that connects the existing transformer and two (2) Power Utility transformers, according to the updated MVSC primary proposal.
- General Notes – Clarification on coordination required with the Power Utility about its equipment and clearances.
- General Notes – Clarification on coordination required with other disciplines work, including any digging work.

E-102
- Power Site Plan – Update on the number, location, and tagging of two (2) Power Utility transformers and a new primary vault, according to the updated MVSC proposal.

E-201
- Enlarged Power Site Plan – Update on the number, location, and tag of two (2) Power Utility transformers and a new primary vault according to the updated MVSC proposal.

E-202
- Enlarged Plan Electrical Room 184 – Update on the underground main low voltage feeders location and tagging, owning to the main switchboard "MSB1" and the automatic transfer switch "ATS-E".

E-601
- Electrical One-Line Diagram – Update on the number, connection, and tagging of two (2) Power Utility transformers and a new primary vault, according to the updated MVSC proposal.
- One-Line Symbols Legend – Utility primary vault symbol included.
- Feeder-Branch Circuit Schedule – Update on the PS01 feeder remark "By MVSC".

E-602
- Feeder-Branch Circuit Schedule – Update on the PS01 feeder remark "By MVSC".

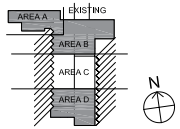

KEY NOTES: (#)

1. RECEPTACLE DEVICES SHOWN OVER I.T. RACKS SHALL BE MOUNTED ON OUTSIDE FACE OF CABLE TRAY, CENTERED ON CABLE TRAY WALL.

REVISION		
NO.	DATE	DESCRIPTION
3	03/18/2025	RFI #34 - ELECTRICAL PRIMARY SERVICE

STATE OF TEXAS
GABRIEL BENAVIDES JR.
119255
LICENSED
PROFESSIONAL ENGINEER

03/18/2025

Pharr
CITY OF PHARR, TEXAS

GSA
GENERAL SERVICES ADMINISTRATION
819 TAYLOR STREET
FORT WORTH, TEXAS 76102-6195
817-978-3334
www.gsa.gov

TEXAS DEPARTMENT OF TRANSPORTATION

HALFF
5000 WEST MILITARY, SUITE 100, McALLEN, TEXAS 78503
TEL (956) 664-0286 FAX (956) 664-0282 TBPE FIRM #F-312

PHARR FY16 DAP - IMPORT DOCK AND AG LAB IMPROVEMENTS

ENLARGED ELECTRICAL PLANS

SCALE: AS NOTED	SHEET OF			
DRC	CONT	SECT	JOB	HIGHWAY
CK DRG	921	02	424,425,433	PHARR INT. BRIDGE
DWG	DIST		COUNTY	SHEET NO.
CK DWG	PHR		HIDALGO	E-402
TRS				
CK TRS				

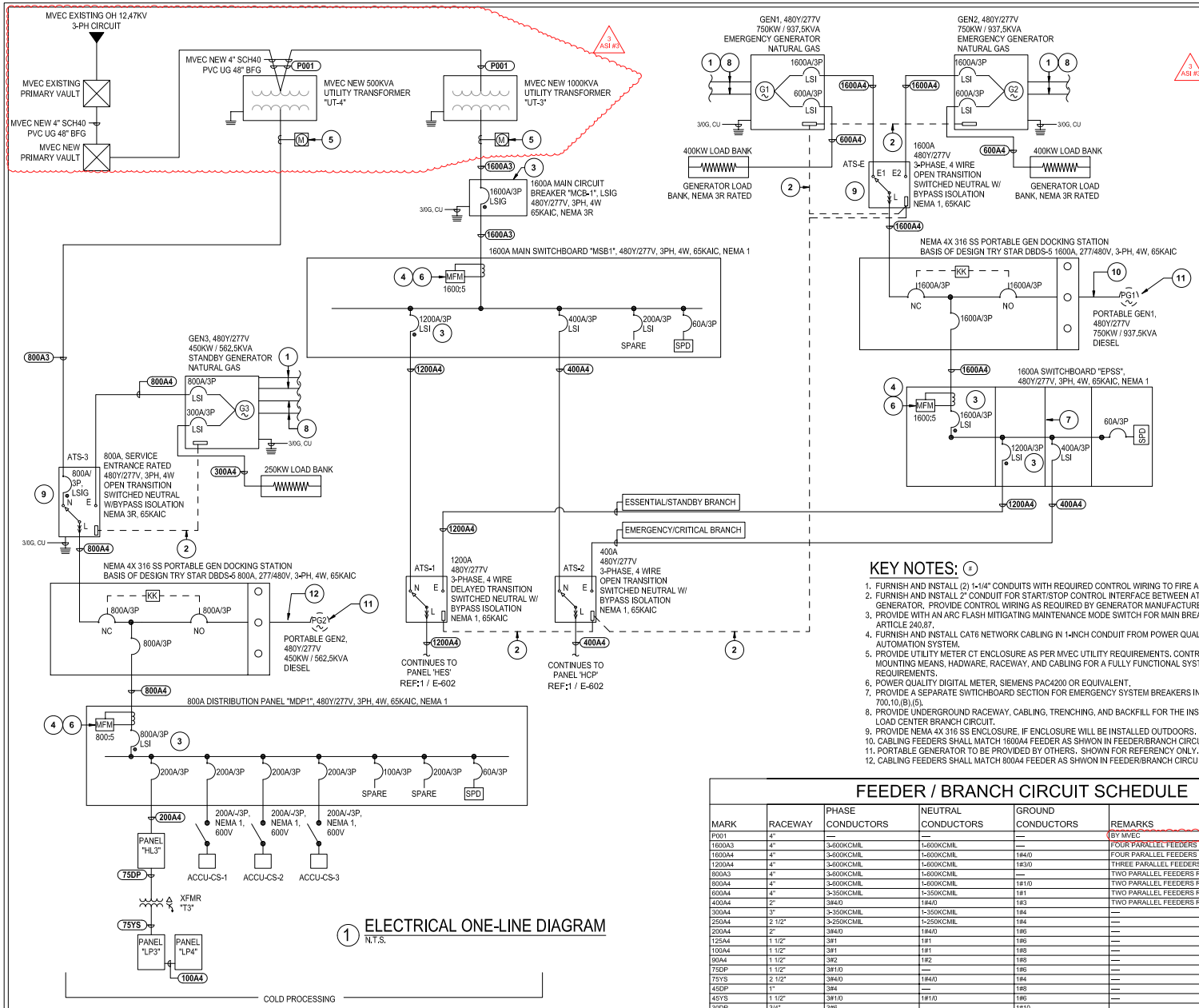

1 ELECTRICAL ONE-LINE DIAGRAM
N.T.S.

ONE LINE SYMBOLS LEGEND

MFM	MULTIFUNCTION POWER METER		UPS EQUIPMENT
M	UTILITY METER		
	SOLID STATE POWER BREAKER WITH ARC ENERGY REDUCTION PER NEC, 240.87(A) 2017	ATS-# N E L	AUTOMATIC TRANSFER SWITCH
	LOAD BANK EQUIPMENT		
TAG#	FIXED EQUIPMENT		
	DISCONNECT SWITCH	G#	POWER GENERATOR
	DRY TYPE DOE2016 TRANSFORMER	PG#	PORTABLE POWER GENERATOR
SPD	SURGE PROTECTION DEVICE	#	INDUCTION ELECTRIC MOTOR # INDICATES RATED HORSEPOWER
KK	KIRK KEY INTERLOCK MECHANISM		UTILITY PRIMARY VAULT

KEY NOTES:

1. FURNISH AND INSTALL (2) 1-1/4" CONDUITS WITH REQUIRED CONTROL WIRING TO FIRE ALARM CONTROL PANEL.
2. FURNISH AND INSTALL 2" CONDUIT FOR START/STOP CONTROL INTERFACE BETWEEN ATS AND EMERGENCY GENERATOR. PROVIDE CONTROL WIRING AS REQUIRED BY GENERATOR MANUFACTURER.
3. PROVIDE WITH AN ARC FLASH MITIGATING MAINTENANCE MODE SWITCH FOR MAIN BREAKER AS REQUIRED BY NEC ARTICLE 240.87.
4. FURNISH AND INSTALL CAT6 NETWORK CABLING IN 1-INCH CONDUIT FROM POWER QUALITY METER TO BUILDING AUTOMATION SYSTEM.
5. PROVIDE UTILITY METER CT ENCLOSURE AS PER MVEC UTILITY REQUIREMENTS. CONTRACTOR SHALL PROVIDE MOUNTING MEANS, HADWARE, RACEWAY, AND CABLING FOR A FULLY FUNCTIONAL SYSTEM AS PER MVEC REQUIREMENTS.
6. POWER QUALITY DIGITAL METER, SIEMENS PAC4200 OR EQUIVALENT.
7. PROVIDE A SEPARATE SWTICHBOARD SECTION FOR EMERGENCY SYSTEM BREAKERS IN COMPLIANCE WITH NEC 700.10.(B).(5).
8. PROVIDE UNDERGROUND RACEWAY, CABLING, TRENCHING, AND BACKFILL FOR THE INSTALLATION OF GENERATOR LOAD CENTER BRANCH CIRCUIT.
9. PROVIDE NEMA 4X 316 SS ENCLOSURE. IF ENCLOSURE WILL BE INSTALLED OUTDOORS.
10. CABLING FEEDERS SHALL MATCH 1600A4 FEEDER AS SHWON IN FEEDER/BRANCH CIRCUIT SCHEDULE.
11. PORTABLE GENERATOR TO BE PROVIDED BY OTHERS. SHOWN FOR REFERENCY ONLY.
12. CABLING FEEDERS SHALL MATCH 800A4 FEEDER AS SHWON IN FEEDER/BRANCH CIRCUIT SCHEDULE.

FEEDER / BRANCH CIRCUIT SCHEDULE

MARK	RACEWAY	PHASE CONDUCTORS	NEUTRAL CONDUCTORS	GROUND CONDUCTORS	REMARKS
P001	4"	—	—	—	BY MVEC
1600A3	4"	3-600KCMIL	1-600KCMIL	—	FOUR PARALLEL FEEDERS REQUIRED
1600A4	4"	3-600KCMIL	1-600KCMIL	1#4/0	FOUR PARALLEL FEEDERS REQUIRED
1200A4	4"	3-600KCMIL	1-600KCMIL	1#3/0	THREE PARALLEL FEEDERS REQUIRED
800A3	4"	3-600KCMIL	1-600KCMIL	—	TWO PARALLEL FEEDERS REQUIRED
800A4	4"	3-600KCMIL	1-600KCMIL	1#1/0	TWO PARALLEL FEEDERS REQUIRED
600A4	4"	3-350KCMIL	1-350KCMIL	1#1	TWO PARALLEL FEEDERS REQUIRED
400A4	2"	3#4/0	1#4/0	1#3	TWO PARALLEL FEEDERS REQUIRED
300A4	3"	3-350KCMIL	1-350KCMIL	1#4	—
250A4	2 1/2"	3-250KCMIL	1-250KCMIL	1#4	—
200A4	2"	3#4/0	1#4/0	1#6	—
125A4	1 1/2"	3#1	1#1	1#6	—
100A4	1 1/2"	3#1	1#1	1#8	—
90A4	1 1/2"	3#2	1#2	1#8	—
75DP	1 1/2"	3#1/0	—	1#6	—
75YS	2 1/2"	3#4/0	1#4/0	1#4	—
45DP	1"	3#4	—	1#8	—
45YS	1 1/2"	3#1/0	1#1/0	1#6	—
30DP	3/4"	3#6	—	1#10	—

REVISION		
NO.	DATE	DESCRIPTION
3	03/18/2025	RFI #34 - ELECTRICAL PRIMARY SERVICE

STATE OF TEXAS
GABRIEL BENAVIDES JR.
119255
LICENSED PROFESSIONAL ENGINEER
03/18/2025

Pharr
CITY OF PHARR, TEXAS

GSA
GENERAL SERVICES ADMINISTRATION
819 TAYLOR STREET
FORT WORTH, TEXAS 76102-6195
817-978-3334
www.gsa.gov

TEXAS DEPARTMENT OF TRANSPORTATION

HALFF
5000 WEST MILITARY, SUITE 100, McALLEN, TEXAS 78503
TEL (956) 664-0286 FAX (956) 664-0282 TBPE FIRM #F-312

PHARR FY16 DAP - IMPORT DOCK AND AG LAB IMPROVEMENTS

ELECTRICAL ONE-LINE DIAGRAM

SCALE: AS NOTED	SHEET OF			
DRC	CONT	SECT	JOB	HIGHWAY
CK DRG	921	02	424.425.433	PHARR INT. BRIDGE
DWG	DIST		COUNTY	SHEET NO.
CK DWG	PHR		HIDALGO	E-601
TRS				
CK TRS				

AVO# 33135

ONE LINE SYMBOLS LEGEND

MFM	MULTIFUNCTION POWER METER		UPS EQUIPMENT	G#	ELECTRICAL POWER GENERATOR
M	UTILITY METER			#	INDUCTION ELECTRIC MOTOR # INDICATES RATED HORSEPOWER
	SOLID STATE POWER BREAKER WITH ARC ENERGY REDUCTION PER NEC, 240.87(A) 2017	ATS-# N E L	AUTOMATIC TRANSFER SWITCH		DISCONNECT SWITCH
	LOAD BANK EQUIPMENT				DRY TYPE DOE2016 TRANSFORMER
TAG#	FIXED EQUIPMENT			SPD	SURGE PROTECTION DEVICE
				KK	KIRK KEY INTERLOCK MECHANISM

FEEDER / BRANCH CIRCUIT SCHEDULE

MARK	RACEWAY	PHASE CONDUCTORS	NEUTRAL CONDUCTORS	GROUND CONDUCTORS	REMARKS
P001	4"	—	—	—	BY MVEC
1600A3	4"	3-600KCMIL	1-600KCMIL	—	FOUR PARALLEL FEEDERS REQUIRED
1600A4	4"	3-600KCMIL	1-600KCMIL	1#4/0	FOUR PARALLEL FEEDERS REQUIRED
1200A4	4"	3-600KCMIL	1-600KCMIL	1#3/0	THREE PARALLEL FEEDERS REQUIRED
800A3	4"	3-600KCMIL	1-600KCMIL	—	TWO PARALLEL FEEDERS REQUIRED
800A4	4"	3-600KCMIL	1-600KCMIL	1#1/0	TWO PARALLEL FEEDERS REQUIRED
600A4	4"	3-350KCMIL	1-350KCMIL	1#1	TWO PARALLEL FEEDERS REQUIRED
400A4	2"	3#4/0	1#4/0	1#3	TWO PARALLEL FEEDERS REQUIRED
300A4	3"	3-350KCMIL	1-350KCMIL	1#4	—
250A4	2 1/2"	3-250KCMIL	1-250KCMIL	1#4	—
200A4	2"	3#4/0	1#4/0	1#6	—
125A4	1 1/2"	3#1	1#1	1#6	—
100A4	1 1/2"	3#1	1#1	1#8	—
90A4	1 1/2"	3#2	1#2	1#8	—
75DP	1 1/2"	3#1/0	—	1#6	—
75YS	2 1/2"	3#4/0	1#4/0	1#4	—
45DP	1"	3#4	—	1#8	—
45YS	1 1/2"	3#1/0	1#1/0	1#6	—
30DP	3/4"	3#6	—	1#10	—

3 ASI #3

KEY NOTES:

1. PROVIDE WITH AN ARC FLASH MITIGATING MAINTENANCE MODE SWITCH FOR MAIN BREAKER AS REQUIRED BY NEC ARTICLE 240.87.
2. FURNISH AND INSTALL CAT6 NETWORK CABLING IN 1-INCH CONDUIT FROM POWER QUALITY METER TO BUILDING AUTOMATION SYSTEM.
3. POWER QUALITY DIGITAL METER. SIEMENS PAC4200 OR EQUIVALENT.

halff

April 3, 2025
57325.002

ASI 003
Pharr FY16 DAP - Agricultural Lab, Dock Expansion I & II
City of Pharr
GSA & CBP
TxDOT

This Modification shall be considered part of the Bidding/Construction Documents and is issued to change, amplify, add to, delete from, or otherwise explain the plans and specifications. Where provisions of this Modification differ from those of the original Bidding/Construction Documents, this Modification shall take precedence over the original plans and specifications and shall govern.

CONSTRUCTION DOCUMENT SHEETS

FP-101
- Correction to Key Notes 1 and 2 to refer to the correct civil plan for continuation (Sheet C-402).

C-101
- Correction to Key Note 3 to refer to the correct civil plan for continuation (Sheet C-402).

C-102
- Correction to Key Note 12 to refer to the correct civil plan for continuation (Sheet C-402).

C-201
- Correction to continuation point to refer to Sheet C-402 for waste connection.

C-202
- Correction to continuation point to refer to Sheet C-402 for waste connection.

C-203
- Correction to continuation point to refer to Sheet C-402 for domestic water connection.

E-002
- General Abbreviations – Addition of "Below Finished Grade" (BFG).

E-101
- Power Site Plan – New Power Utility underground primary feeder location and path that included a new primary vault and two (2) Power Utility transformers, according to the updated MVEC service proposal.
- General Notes – Clarification on coordination required with the Power Utility about its equipment and clearances.
- General Notes – Clarification on coordination required with other disciplines work, including any digging task.

E-104
- Power Site Plan – Update on the number, location, and tagging of two (2) Power Utility transformers and a new primary vault, according to the updated MVEC proposal.

E-401
- Enlarged Power Site Plan – Update on the number, location, and tag of two (2) Power Utility transformers and a new primary vault according to the updated MVEC proposal.

E-402
- Enlarged Plan Electrical Room 154 – Update on the underground main low-voltage feeders location and tagging, coming to the main switchboard "MSB1" and the automatic transfer switch "ATS 2".

E-601
- Electrical One-Line Diagram - Update on the number, connection, and tagging of two (2) Power Utility transformers and a new primary vault, according to the updated MVEC proposal.
- One-Line Symbols Legend – Utility primary vault symbol included.
- Feeder-Branch Circuit Schedule – Update on the P001 feeder remark "By MVEC".

E-602
- Feeder-Branch Circuit Schedule – Update on the P001 feeder remark "By MVEC".

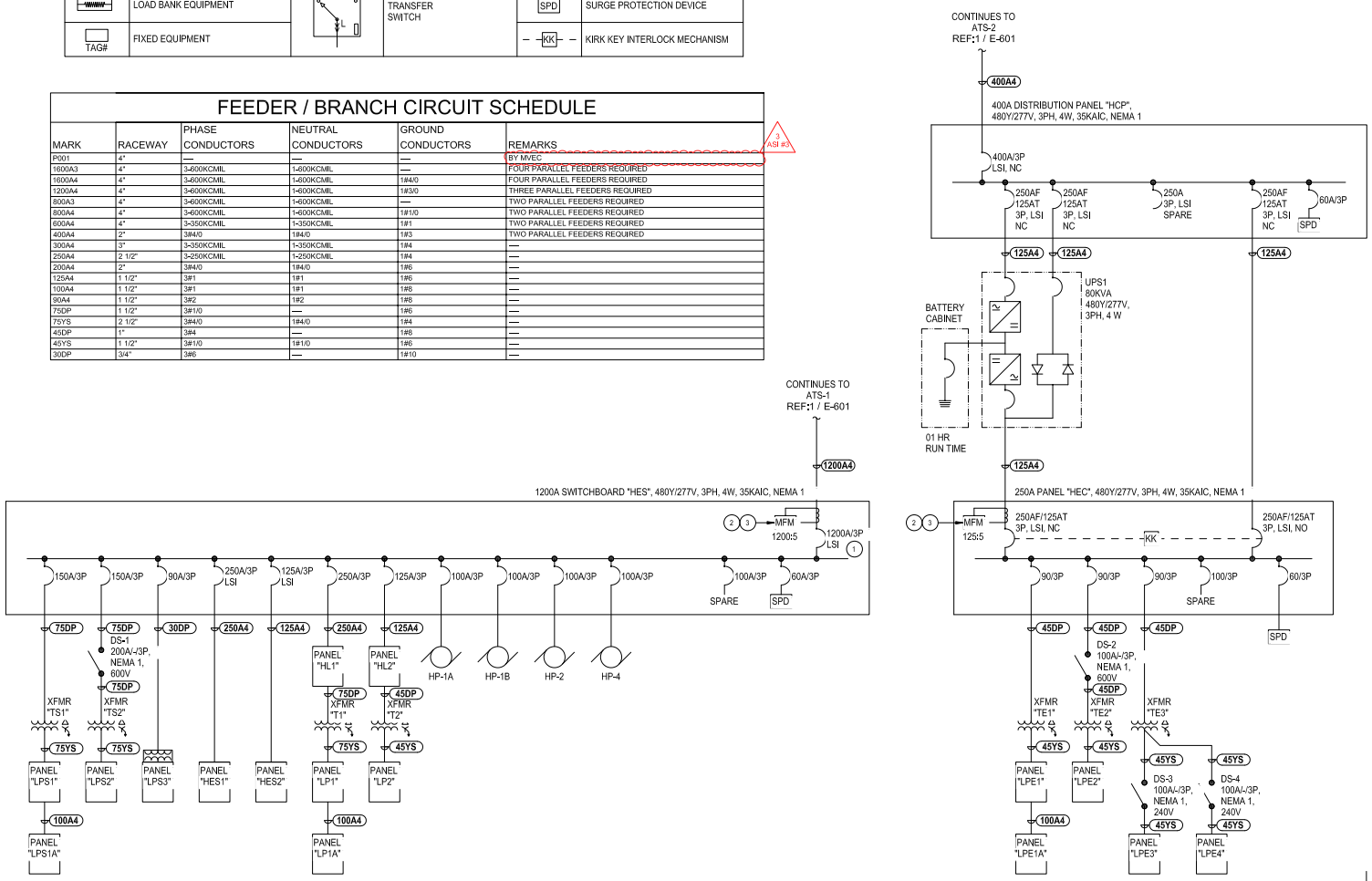

AGRICULTURAL LABS & OPERATIONS MANAGEMENT

1 ELECTRICAL ONE-LINE DIAGRAM CONTINUED
N.T.S.

REVISION		
NO.	DATE	DESCRIPTION
3	03/18/2025	RFI #34 - ELECTRICAL PRIMARY SERVICE

STATE OF TEXAS
GABRIEL BENAVIDES JR.
119255
LICENSED
PROFESSIONAL ENGINEER
03/18/2025

Pharr
CITY OF PHARR, TEXAS

GSA
GENERAL SERVICES ADMINISTRATION
819 TAYLOR STREET
FORT WORTH, TEXAS 76102-6195
817-978-3334
www.gsa.gov

TEXAS DEPARTMENT OF TRANSPORTATION

HALFF
5000 WEST MILITARY, SUITE 100, McALLEN, TEXAS 78503
TEL (956) 664-0286 FAX (956) 664-0282 TBPE FIRM #F-312

PHARR FY16 DAP - IMPORT DOCK AND AG LAB IMPROVEMENTS

ELECTRICAL ONE-LINE DIAGRAM CONT.

SCALE: AS NOTED	SHEET OF			
DRC	CONT	SECT	JOB	HIGHWAY
CK DRG	921	02	424,425,433	PHARR INT. BRIDGE
DWG	DIST	COUNTY		SHEET NO.
CK DWG	PHR	HIDALGO		E-602
TRS				
CK TRS				

D. Wilson Construction
PO Box 3455
McAllen, Texas 78502
P: (956) 686-9573
F: (956) 686-3270

Project: 24-235 Pharr FY16 DAP - Agricultural Lab, Dock Expansion I & II
9901 S Cage Blvd
Pharr, Texas 78577

RFI #34: Electrical Primary Service

Status	Closed on 03/04/25		
To	Sabrina Alvarez (Brownstone Consultants, LLC) Rolando Ayala (Brownstone Consultants, LLC) David Chacon (Brownstone Consultants, LLC)	**From**	Shukan Bhakta (D Wilson Construction Company) PO Box 3455 McAllen, Texas 78502
Date Initiated	Feb 19, 2025	**Due Date**	Feb 26, 2025
Location		**Project Stage**	
Cost Impact	Yes (Unknown)	**Schedule Impact**	
Spec Section		**Cost Code**	
Drawing Number	E-601	**Reference**	
Linked Drawings			
Received From	Leo Vela (D & F Industries, Inc.)	**Sub Job**	
Copies To	Pilar Anzaldua-Garza (D Wilson Construction Company), Vanessa Garza (D Wilson Construction Company), Emiliano Larios (D Wilson Construction Company), Sabas Lopez (D Wilson Construction Company), Arturo Perez (D Wilson Construction Company) , Claudio Velasco (D Wilson Construction Company), Roberto Villela (D Wilson Construction Company)		

Activity

Question

Question from Shukan Bhakta D Wilson Construction Company *on Wednesday, Feb 19, 2025 at 04:32 PM CST*

Sheet E-601 shows a new MVEC Utility Transformer UT-3 being served from existing Utility Transformer UT-2. In coordinating with MVEC, they determined that the existing utility line serving UT-2 does not have the capacity to carry the added load. In addition, the new utility transformer has a current lead time of close to a year. MVEC is proposing to serve the project with (2) transformers and a new utility vault. The (2) proposed transformers are currently in MVEC yard; which can be designated for this project. For your review, attached is the MVEC Proposed Service, Sheet E-601 Electrical One Line Diagram, and the Utility Yard coordination shop drawing. Please have the A/E/O team review this installation.

Attachments
electrical-primary-service-rfi-6.pdf

Official Response

Response from Emiliano Larios D Wilson Construction Company *on Monday, Mar 3, 2025 at 04:11 PM CST*

Response from Miguel Pineda on 2/27/2025:
Acknowledged, no objection.

Attachments
RFI#34 - Electrical Primary Service - Rev.2 - Response.pdf

All Replies

Response from Shukan Bhakta D Wilson Construction Company *on Wednesday, Feb 26, 2025 at 04:24 PM CST*

Response from Alfredo (Freddy) Ayala IV - MVEC on 2/25/2025:
MVEC has deemed that the 500KVA transformer is sufficient to safely power the ATS-3/DS-3/MDP-1 estimated demand. The transformer can handle up to 130-150% of its KVA for its lifespan. MVEC takes ownership of the transformer maintenance and replacements. If this transformer is deemed to need to be replaced in the future, MVEC will replace the transformer at no cost to the member.

Alfredo (Freddy) Ayala IV
Engineering Manager
Central Operations
M: (956)376-0163
E: aayala@magicvalley.coop

Attachments
RFI#34 MVEC Response.pdf

Response from Shukan Bhakta D Wilson Construction Company *on Monday, Feb 24, 2025 at 01:48 PM CST*

Response from Miguel Pineda on 2/24/2025:
1. We agree with the MVEC proposed primary design. However, all primary components and protections are under the scope of the MVEC Utility.
2. New MVEC transformers capacity vs. Projected Main Panelboards estimated demand comparison:
A) The new MVEC 1000 KVA transformer powering the MCB-1/MSB-1 - 1600A, 480Y/277V, 3-Phase, 4 Wire – Estimated Demand: 661 KVA (66% of transformer capacity - ✓).
B) The new MVEC 500 KVA transformer powering the ATS-3/DS-3/MDP-1 - 800A, 480Y/277V, 3-Phase, 4 Wire – Estimated Demand: 510 KVA (102% of transformer capacity - !!).
Important Note: It shall be reviewed by MVEC, to determine if a new MVEC 500 KVA transformer can safely power the ATS-3/DS-3/MDP-1 estimated demand.

3. Main feeder connections:
A) The new MVEC 1000 KVA transformer powering the projected feeder 1600A4.
B) The new MVEC 500 KVA transformer powering the projected feeder 800A3.
Important Note: Subject to MVEC review, as indicated in Item #2B (above).
C) Both meters and the rest of the equipment remain as projected.

Attachments
RFI#34 - Electrical Primary Service - Response.pdf

5000 West Military,
Ste 100 McAllen,
Texas 78503 (956) 664-0286
Fax (956) 664-0282

Request for Information

To:	Brownstone Consultants / MVEC	**Date:**	02/27/2025	
From:	Miguel Pineda	**AVO:**	57325.002	**RFI No:** #34 **Rev 2**
Email:	mpineda@halff.com	**Project:**	Pharr FY16 DAP – Agricultural Lab, Dock Expansion I & II	

Subject: Electrical Primary Service

☐Letter Dated: ☒Email Dated: 02/27/2025

☐Phone call Dated: ☐Fax Dated:

This confirms and records a request for information. Unless notified in writing within three days of the date noted above, it is agreed that a response generated from the request shall be provided to this office within five days.

Utility communication:

Good morning, All,

MVEC has deemed that the 500KVA transformer is sufficient to safely power the ATS-3/DS-3/MDP-1 estimated demand. The transformer can handle up to 130-150% of its KVA for its lifespan. MVEC takes ownership of the transformer maintenance and replacements. If this transformer is deemed to need to be replaced in the future, MVEC will replace the transformer at no cost to the member.

Please let me know if you have any questions or concerns.

Respectfully,

Alfredo (Freddy) Ayala IV
Engineering Manager
Central Operations
M: (956)376-0163
E: aayala@magicvalley.coop

Magic Valley MVEC Electric Cooperative

Response:
Acknowledged, no objection.

Answer by: Miguel Pineda

Copies: ☐ File ☐Owner ☐ Arch ☒ Other: General Contractor

Attachments: RFI#34 MVEC Response.

Outlook

RE: Pharr Bridge Expansion Project - DF coordination - Fault Current Study

From Alfredo Ayala <aayala@magicvalley.coop>
Date Tue 2/25/2025 10:37 AM
To Claudio Velasco <claudiov@dwilsonconstruction.com>; Leo Vela <lvela@dandfindustries.com>
Cc Pilar Anzaldua-Garza <pilara@dwilsonconstruction.com>; Emiliano Larios <Emilianol@dwilsonconstruction.com>; Roberto Villela <robertov@dwilsonconstruction.com>; Shukan Bhakta <shukanb@dwilsonconstruction.com>; Arturo Perez <arturop@dwilsonconstruction.com>

Caution:

This email originated from outside of D. Wilson Construction. Do not click links or open attachments unless you recognize the sender's email address (and not just the name) and know the content is safe.

Good morning, All,

MVEC has deemed that the 500KVA transformer is sufficient to safely power the ATS-3/DS-3/MDP-1 estimated demand. The transformer can handle up to 130-150% of its KVA for its lifespan. MVEC takes ownership of the transformer maintenance and replacements. If this transformer is deemed to need to be replaced in the future, MVEC will replace the transformer at no cost to the member.

Please let me know if you have any questions or concerns.

Respectfully,

Alfredo (Freddy) Ayala IV
Engineering Manager
Central Operations
M: (956)376-0163
E: aayala@magicvalley.coop

Magic Valley MVEC Electric Cooperative

From: Claudio Velasco <claudiov@dwilsonconstruction.com>
Sent: Tuesday, February 25, 2025 8:12 AM
To: Alfredo Ayala <aayala@magicvalley.coop>; Leo Vela <lvela@dandfindustries.com>
Cc: Pilar Anzaldua-Garza <pilara@dwilsonconstruction.com>; Emiliano Larios <Emilianol@dwilsonconstruction.com>; Roberto Villela <robertov@dwilsonconstruction.com>; Shukan Bhakta <shukanb@dwilsonconstruction.com>; Arturo Perez <arturop@dwilsonconstruction.com>
Subject: FW: Pharr Bridge Expansion Project - DF coordination - Fault Current Study

You don't often get email from claudiov@dwilsonconstruction.com. Learn why this is important

Outlook

Re: Pharr FY16 DAP - RFI #34 - Electrical Primary Service

From Sabrina Alvarez <Sabrina@bstone.biz>
Date Thu 2/27/2025 2:45 PM
To Shukan Bhakta <shukanb@dwilsonconstruction.com>
Cc Roberto Villela <robertov@dwilsonconstruction.com>; Vanessa J. Garza <vanessag@dwilsonconstruction.com>; Pilar Anzaldua-Garza <pilara@dwilsonconstruction.com>; Claudio Velasco <claudiov@dwilsonconstruction.com>; Emiliano Larios <Emilianol@dwilsonconstruction.com>; David Chacon <david@bstone.biz>; Rolando Ayala <rolando@bstone.biz>; Maria Rangel <maria.rangel@pharr-tx.gov>; Edwin Manrique <edwin.manrique@pharr-tx.gov>; pharr_fy16_dap_lpoe-eqmabpblyt4j56j@corr.acc.autodesk.com <pharr_fy16_dap_lpoe-eqmabpblyt4j56j@corr.acc.autodesk.com>

1 attachment (617 KB)
RFI#34 - Electrical Primary Service - Rev.2 - Response.pdf;

Caution:

This email originated from outside of D. Wilson Construction. Do not click links or open attachments unless you recognize the sender's email address (and not just the name) and know the content is safe.

Shukan,

Please find attached response to RFI #34 regarding MVEC's comments. Please let me know if you have any questions.

Best regards,

Sabrina Alvarez
Project Control Specialist, Brownstone Consultants
956.307.3057 | sabrina@bstone.biz

On Thu, Feb 27, 2025 at 8:34 AM Sabrina Alvarez <Sabrina@bstone.biz> wrote:

> Shukan,
>
> I'll forward it to the Engineer and update you as soon as I hear back.

Best Regards,

Sabrina Alvarez
Project Control Specialist, Brownstone Consultants

956.307.3057 | sabrina@bstone.biz

On Wed, Feb 26, 2025 at 4:11 PM Shukan Bhakta <shukanb@dwilsonconstruction.com> wrote:

Sabrina,

Please see attached response from MVEC to engineer's comments. Can you have engineer review and provide a response?

Thanks,

SHUKAN BHAKTA
Assistant Project Manager
Procore Administrator

Office: (956) 686-9573
Direct: (956) 800-6538
Cell: (956) 460-1120
Email: shukanb@dwilsonconstruction.com
Web: www.dwilsonconstruction.com
Address: P.O. Box 3455, McAllen, TX 78502-3455
1207 E. Pecan, McAllen, Texas 78502

D. WILSON CONSTRUCTION CO.
An Employee-Owned Company

From: Sabrina Alvarez <Sabrina@bstone.biz>
Sent: Monday, February 24, 2025 8:18 AM
To: Roberto Villela <robertov@dwilsonconstruction.com>; Shukan Bhakta <shukanb@dwilsonconstruction.com>; Vanessa J. Garza <vanessag@dwilsonconstruction.com>; Pilar Anzaldua-Garza <pilara@dwilsonconstruction.com>; Claudio Velasco <claudiov@dwilsonconstruction.com>; Emiliano Larios <Emilianol@dwilsonconstruction.com>
Cc: David Chacon <david@bstone.biz>; Rolando Ayala <rolando@bstone.biz>; Maria Rangel <maria.rangel@pharr-tx.gov>; Edwin Manrique <edwin.manrique@pharr-tx.gov>; pharr_fy16_dap_lpoe-eqmabpblyt4j56j@corr.acc.autodesk.com <pharr_fy16_dap_lpoe-eqmabpblyt4j56j@corr.acc.autodesk.com>
Subject: Pharr FY16 DAP - RFI #34 - Electrical Primary Service

Caution:

This email originated from outside of D. Wilson Construction. Do not click links or open attachments unless you recognize the sender's email address (and not just the name) and know the content is safe.

Good morning,

Attached is the response to RFI #34. Please let me know if you have any questions.

Best Regards,

Sabrina Alvarez
Project Control Specialist, Brownstone Consultants

956.307.3057 | sabrina@bstone.biz

D. Wilson Construction
PO Box 3455
McAllen, Texas 78502
P: (956) 686-9573
F: (956) 686-3270

Project: 24-235 Pharr FY16 DAP - Agricultural Lab, Dock Expansion I & II
9901 S Cage Blvd
Pharr, Texas 78577

RFI #34: Electrical Primary Service

Status	Open		
To	Sabrina Alvarez (Brownstone Consultants, LLC) Rolando Ayala (Brownstone Consultants, LLC) David Chacon (Brownstone Consultants, LLC)	**From**	Shukan Bhakta (D Wilson Construction Company) PO Box 3455 McAllen, Texas 78502
Date Initiated	Feb 19, 2025	**Due Date**	Feb 26, 2025
Location		**Project Stage**	
Cost Impact	Yes (Unknown)	**Schedule Impact**	
Spec Section		**Cost Code**	
Drawing Number	E-601	**Reference**	
Linked Drawings			
Received From	Leo Vela (D & F Industries, Inc.)	**Sub Job**	
Copies To	Pilar Anzaldua-Garza (D Wilson Construction Company), Vanessa Garza (D Wilson Construction Company), Emiliano Larios (D Wilson Construction Company), Sabas Lopez (D Wilson Construction Company), Arturo Perez (D Wilson Construction Company) , Claudio Velasco (D Wilson Construction Company), Roberto Villela (D Wilson Construction Company)		

Activity

Question

Question from Shukan Bhakta D Wilson Construction Company *on Wednesday, Feb 19, 2025 at 04:32 PM CST*

Sheet E-601 shows a new MVEC Utility Transformer UT-3 being served from existing Utility Transformer UT-2. In coordinating with MVEC, they determined that the existing utility line serving UT-2 does not have the capacity to carry the added load. In addition, the new utility transformer has a current lead time of close to a year. MVEC is proposing to serve the project with (2) transformers and a new utility vault. The (2) proposed transformers are currently in MVEC yard; which can be designated for this project. For your review, attached is the MVEC Proposed Service, Sheet E-601 Electrical One Line Diagram, and the Utility Yard coordination shop drawing. Please have the A/E/O team review this installation.

Attachments
electrical-primary-service-rfi-6.pdf

All Replies

Response from Shukan Bhakta D Wilson Construction Company *on Wednesday, Feb 26, 2025 at 04:24 PM CST*

Response from Alfredo (Freddy) Ayala IV - MVEC on 2/25/2025:
MVEC has deemed that the 500KVA transformer is sufficient to safely power the ATS-3/DS-3/MDP-1 estimated demand. The transformer can handle up to 130-150% of its KVA for its lifespan. MVEC takes ownership of the transformer maintenance and replacements. If this transformer is deemed to need to be replaced in the future, MVEC will replace the transformer at no cost to the member.

Alfredo (Freddy) Ayala IV
Engineering Manager
Central Operations
M: (956)376-0163
E: aayala@magicvalley.coop

Attachments
RFI#34 MVEC Response.pdf

Response from Shukan Bhakta D Wilson Construction Company *on Monday, Feb 24, 2025 at 01:48 PM CST*

Response from Miguel Pineda on 2/24/2025:
1. We agree with the MVEC proposed primary design. However, all primary components and protections are under the scope of the MVEC Utility.
2. New MVEC transformers capacity vs. Projected Main Panelboards estimated demand comparison:
A) The new MVEC 1000 KVA transformer powering the MCB-1/MSB-1 - 1600A, 480Y/277V, 3-Phase, 4 Wire – Estimated Demand: 661 KVA (66% of transformer capacity - ✓).
B) The new MVEC 500 KVA transformer powering the ATS-3/DS-3/MDP-1 - 800A, 480Y/277V, 3-Phase, 4 Wire – Estimated Demand: 510 KVA (102% of transformer capacity - !!).
Important Note: It shall be reviewed by MVEC, to determine if a new MVEC 500 KVA transformer can safely power the ATS-3/DS-3/MDP-1 estimated demand.

3. Main feeder connections:
A) The new MVEC 1000 KVA transformer powering the projected feeder 1600A4.
B) The new MVEC 500 KVA transformer powering the projected feeder 800A3.
Important Note: Subject to MVEC review, as indicated in Item #2B (above).
C) Both meters and the rest of the equipment remain as projected.

Attachments
RFI#34 - Electrical Primary Service - Response.pdf

Outlook

RE: Pharr Bridge Expansion Project - DF coordination - Fault Current Study

From Alfredo Ayala <aayala@magicvalley.coop>
Date Tue 2/25/2025 10:37 AM
To Claudio Velasco <claudiov@dwilsonconstruction.com>; Leo Vela <lvela@dandfindustries.com>
Cc Pilar Anzaldua-Garza <pilara@dwilsonconstruction.com>; Emiliano Larios <Emilianol@dwilsonconstruction.com>; Roberto Villela <robertov@dwilsonconstruction.com>; Shukan Bhakta <shukanb@dwilsonconstruction.com>; Arturo Perez <arturop@dwilsonconstruction.com>

Caution:

This email originated from outside of D. Wilson Construction. Do not click links or open attachments unless you recognize the sender's email address (and not just the name) and know the content is safe.

Good morning, All,

MVEC has deemed that the 500KVA transformer is sufficient to safely power the ATS-3/DS-3/MDP-1 estimated demand. The transformer can handle up to 130-150% of its KVA for its lifespan. MVEC takes ownership of the transformer maintenance and replacements. If this transformer is deemed to need to be replaced in the future, MVEC will replace the transformer at no cost to the member.

Please let me know if you have any questions or concerns.

Respectfully,

Alfredo (Freddy) Ayala IV
Engineering Manager
Central Operations
M: (956)376-0163
E: aayala@magicvalley.coop

Magic Valley MVEC Electric Cooperative

From: Claudio Velasco <claudiov@dwilsonconstruction.com>
Sent: Tuesday, February 25, 2025 8:12 AM
To: Alfredo Ayala <aayala@magicvalley.coop>; Leo Vela <lvela@dandfindustries.com>
Cc: Pilar Anzaldua-Garza <pilara@dwilsonconstruction.com>; Emiliano Larios <Emilianol@dwilsonconstruction.com>; Roberto Villela <robertov@dwilsonconstruction.com>; Shukan Bhakta <shukanb@dwilsonconstruction.com>; Arturo Perez <arturop@dwilsonconstruction.com>
Subject: FW: Pharr Bridge Expansion Project - DF coordination - Fault Current Study

You don't often get email from claudiov@dwilsonconstruction.com. Learn why this is important

Outlook

Re: Pharr FY16 DAP - RFI #34 - Electrical Primary Service

From Shukan Bhakta <shukanb@dwilsonconstruction.com>
Date Wed 2/26/2025 4:11 PM
To Sabrina Alvarez <Sabrina@bstone.biz>; Roberto Villela <robertov@dwilsonconstruction.com>; Vanessa J. Garza <vanessag@dwilsonconstruction.com>; Pilar Anzaldua-Garza <pilara@dwilsonconstruction.com>; Claudio Velasco <claudiov@dwilsonconstruction.com>; Emiliano Larios <Emilianol@dwilsonconstruction.com>
Cc David Chacon <david@bstone.biz>; Rolando Ayala <rolando@bstone.biz>; Maria Rangel <maria.rangel@pharr-tx.gov>; Edwin Manrique <edwin.manrique@pharr-tx.gov>; pharr_fy16_dap_lpoe-eqmabpblyt4j56j@corr.acc.autodesk.com <pharr_fy16_dap_lpoe-eqmabpblyt4j56j@corr.acc.autodesk.com>

1 attachment (382 KB)
RFI#34 MVEC Response.pdf;

Sabrina,

Please see attached response from MVEC to engineer's comments. Can you have engineer review and provide a response?

Thanks,

SHUKAN BHAKTA
Assistant Project Manager
Procore Administrator

Office: (956) 686-9573
Direct: (956) 800-6538
Cell: (956) 460-1120
Email: shukanb@dwilsonconstruction.com
Web: www.dwilsonconstruction.com
Address: P.O. Box 3455, McAllen, TX 78502-3455
1207 E. Pecan, McAllen, Texas 78502

D. WILSON CONSTRUCTION CO.
An Employee-Owned Company

From: Sabrina Alvarez <Sabrina@bstone.biz>
Sent: Monday, February 24, 2025 8:18 AM
To: Roberto Villela <robertov@dwilsonconstruction.com>; Shukan Bhakta <shukanb@dwilsonconstruction.com>; Vanessa J. Garza <vanessag@dwilsonconstruction.com>; Pilar Anzaldua-Garza <pilara@dwilsonconstruction.com>; Claudio Velasco <claudiov@dwilsonconstruction.com>; Emiliano Larios <Emilianol@dwilsonconstruction.com>
Cc: David Chacon <david@bstone.biz>; Rolando Ayala <rolando@bstone.biz>; Maria Rangel <maria.rangel@pharr-tx.gov>; Edwin Manrique <edwin.manrique@pharr-tx.gov>; pharr_fy16_dap_lpoe-eqmabpblyt4j56j@corr.acc.autodesk.com <pharr_fy16_dap_lpoe-eqmabpblyt4j56j@corr.acc.autodesk.com>
Subject: Pharr FY16 DAP - RFI #34 - Electrical Primary Service

Caution:
This email originated from outside of D. Wilson Construction. Do not click links or open attachments unless you recognize the sender's email address (and not just the name) and know the content is safe.

Good morning,

Attached is the response to RFI #34. Please let me know if you have any questions.

Best Regards,

Sabrina Alvarez
Project Control Specialist, Brownstone Consultants

956.307.3057 | sabrina@bstone.biz

D. Wilson Construction
PO Box 3455
McAllen, Texas 78502
P: (956) 686-9573
F: (956) 686-3270

Project: 24-235 Pharr FY16 DAP - Agricultural Lab, Dock Expansion I & II
9901 S Cage Blvd
Pharr, Texas 78577

RFI #34: Electrical Primary Service

Status	Open		
To	Sabrina Alvarez (Brownstone Consultants, LLC) Rolando Ayala (Brownstone Consultants, LLC) David Chacon (Brownstone Consultants, LLC)	**From**	Shukan Bhakta (D Wilson Construction Company) PO Box 3455 McAllen, Texas 78502
Date Initiated	Feb 19, 2025	**Due Date**	Feb 26, 2025
Location		**Project Stage**	
Cost Impact	Yes (Unknown)	**Schedule Impact**	
Spec Section		**Cost Code**	
Drawing Number	E-601	**Reference**	
Linked Drawings			
Received From	Leo Vela (D & F Industries, Inc.)	**Sub Job**	
Copies To	Pilar Anzaldua-Garza (D Wilson Construction Company), Vanessa Garza (D Wilson Construction Company), Emiliano Larios (D Wilson Construction Company), Sabas Lopez (D Wilson Construction Company), Arturo Perez (D Wilson Construction Company) , Claudio Velasco (D Wilson Construction Company), Roberto Villela (D Wilson Construction Company)		

Activity

Question

Question from Shukan Bhakta D Wilson Construction Company *on Wednesday, Feb 19, 2025 at 04:32 PM CST*

Sheet E-601 shows a new MVEC Utility Transformer UT-3 being served from existing Utility Transformer UT-2. In coordinating with MVEC, they determined that the existing utility line serving UT-2 does not have the capacity to carry the added load. In addition, the new utility transformer has a current lead time of close to a year. MVEC is proposing to serve the project with (2) transformers and a new utility vault. The (2) proposed transformers are currently in MVEC yard; which can be designated for this project. For your review, attached is the MVEC Proposed Service, Sheet E-601 Electrical One Line Diagram, and the Utility Yard coordination shop drawing. Please have the A/E/O team review this installation.

Attachments
electrical-primary-service-rfi-6.pdf

All Replies

Response from Shukan Bhakta D Wilson Construction Company *on Monday, Feb 24, 2025 at 01:48 PM CST*

Response from Miguel Pineda on 2/24/2025:
1. We agree with the MVEC proposed primary design. However, all primary components and protections are under the scope of the MVEC Utility.
2. New MVEC transformers capacity vs. Projected Main Panelboards estimated demand comparison:
A) The new MVEC 1000 KVA transformer powering the MCB-1/MSB-1 - 1600A, 480Y/277V, 3-Phase, 4 Wire – Estimated Demand: 661 KVA (66% of transformer capacity - ✓).
B) The new MVEC 500 KVA transformer powering the ATS-3/DS-3/MDP-1 - 800A, 480Y/277V, 3-Phase, 4 Wire – Estimated Demand: 510 KVA (102% of transformer capacity - !!).
Important Note: It shall be reviewed by MVEC, to determine if a new MVEC 500 KVA transformer can safely power the ATS-3/DS-3/MDP-1 estimated demand.

3. Main feeder connections:
A) The new MVEC 1000 KVA transformer powering the projected feeder 1600A4.
B) The new MVEC 500 KVA transformer powering the projected feeder 800A3.
Important Note: Subject to MVEC review, as indicated in Item #2B (above).
C) Both meters and the rest of the equipment remain as projected.

Attachments
RFI#34 - Electrical Primary Service - Response.pdf

5000 West Military,
Ste 100 McAllen,
Texas 78503 (956) 664-0286
Fax (956) 664-0282

Request for Information

To:	Brownstone Consultants.	**Date:**	02/21/2025	
From:	Miguel Pineda	**AVO:**	57325.002	**RFI No:** #34
Email:	mpineda@halff.com	**Project:**	Pharr FY16 DAP – Agricultural Lab, Dock Expansion I & II	

Subject: Electrical Primary Service

☐Letter Dated: ☒Email Dated: 02/20/2025

☐Phone call Dated: ☐Fax Dated:

This confirms and records a request for information. Unless notified in writing within three days of the date noted above, it is agreed that a response generated from the request shall be provided to this office within five days.

Question:
Sheet E-601 shows a new MVEC Utility Transformer UT-3 being served from existing Utility Transformer UT-2. In coordinating with MVEC, they determined that the existing utility line serving UT-2 does not have the capacity to carry the added load. In addition, the new utility transformer has a current lead time of close to a year. MVEC is proposing to serve the project with (2) transformers and a new utility vault. The (2) proposed transformers are currently in MVEC yard; which can be designated for this project. For your review, attached is the MVEC Proposed Service, Sheet E-601 Electrical One Line Diagram, and the Utility Yard coordination shop drawing. Please have the A/E/O team review this installation.

MVEC Proposal:

1. According to the Drawings E-601 and E-604, there are projected two main 480Y/277V feeders:
   A) MCB-1/MSB-1 - 1600A, 480Y/277V, 3-Phase, 4 Wire – Estimated Demand: 661 KVA.
   B) ATS-3/DS-3/MDP-1 - 800A, 480Y/277V, 3-Phase, 4 Wire – Estimated Demand: 510 KVA.
2. According to Notes on E-601, under the MVEC proposal there would be:
   A) A New primary vault and ending in an existing primary vault.
   B) A primary feeder from the primary vault to a new MVEC 500KVA.
   C) A primary feeder from a new MVEC 500KVA to a new MVEC 1000KVA.
   D) The projected feeder 800A3 will be powered by the new MVEC 500KVA.
   E) The projected feeder 1600A4 will be powered by the new MVEC 1000KVA.
   F) Both meters and the rest of the equipment remain as projected.
3. MVEC Facilities Plan View Description:
   A) A new MVEC primary feeder will run from the existing MVEC Primary Vault through a 4” SCH-40 PVC buried conduit to a new MVEC Primary Vault.
   B) That new MVEC primary feeder will continue from the new MVEC Primary Vault through a 4” SCH-40 PVC buried conduit to a new MVEC 1000 KVA transformer.
   C) A new MVEC primary feeder will run from the new MVEC 1000 KVA transformer through a 4” SCH-40 PVC buried conduit to a new MVEC 500 KVA transformer.
   D) Note: This MV configuration should be more convenient than described in Item #2 (above).

5000 West Military,
Ste 100 McAllen,
Texas 78503 (956) 664-0286
Fax (956) 664-0282

Response: **Exceptions as Noted.**

1. We agree with the MVEC proposed primary design. However, all primary components and protections are under the scope of the MVEC Utility.
2. New MVEC transformers capacity vs. Projected Main Panelboards estimated demand comparison:
   A) The new MVEC 1000 KVA transformer powering the MCB-1/MSB-1 - 1600A, 480Y/277V, 3-Phase, 4 Wire – Estimated Demand: 661 KVA (66% of transformer capacity - ✓).
   B) The new MVEC 500 KVA transformer powering the ATS-3/DS-3/MDP-1 - 800A, 480Y/277V, 3-Phase, 4 Wire – Estimated Demand: 510 KVA (102% of transformer capacity - !!).
   Important Note: It shall be reviewed by MVEC, to determine if a new MVEC 500 KVA transformer can safely power the ATS-3/DS-3/MDP-1 estimated demand.
3. Main feeder connections:
   A) The new MVEC 1000 KVA transformer powering the projected feeder 1600A4.
   B) The new MVEC 500 KVA transformer powering the projected feeder 800A3.
   Important Note: Subject to MVEC review, as indicated in Item #2B (above).
   C) Both meters and the rest of the equipment remain as projected.

Answer by: Miguel Pineda

Copies: ☐ File ☐Owner ☐ Arch ☒ Other: General Contractor

Attachments: RFI#34 Electrical Primary Service.

RFI detail

#34 Electrical Primary Service

Status	**Open** In Review
Created on	Feb 20, 2025 by **Sabrina Alvarez** (Brownstone Consultants)
RFI type	Default RFI workflow
Ball in court	**Rolando Ayala**
Due date	-

Question

-

References and Attachments

Files (1)

- 34 - Item - Electrical Primary Service.pdf

Impact

Cost impact	-
Schedule impact	-

Other attributes

Priority	Normal
Discipline	-
Category	-
Location	-
Location details	-

External id	-
Co-reviewer(s)	

Activities	By	At
Sabrina Alvarez added a reference to a File **34 - Item - Electrical Primary Service.pdf**	**Sabrina Alvarez**	Feb 20, 2025, 9:45 AM CST
Sabrina Alvarez (Brownstone Consultants) created this RFI in **Open** In Review status and set Ball in court to **Rolando Ayala**.	**Sabrina Alvarez**	Feb 20, 2025, 9:45 AM CST

D & F Industries, Inc
P.O Box 1680 3106 N. Sugar Road
Pharr Texas 78577
(PH) 956-781-2496

REQUEST FOR INFORMATION

Project Name: 24-235 Pharr FY16 DAP Agricultural Lab & Dock Expansion
Initiated By: Leonel Vela
Issued To: Shukan Bhakta

Reference #: 6
Date: 18 February 2025
Required By: **20 February 2025**

Subject

Electrical Primary Service

Details

Sheet E-601 shows a new MVEC Utility Transformer UT-3 being served from existing Utility Transformer UT-2. In coordinating with MVEC, they determined that the existing utility line serving UT-2 does not have the capacity to carry the added load. In addition, the new utility transformer has a current lead time of close to a year. MVEC is proposing to serve the project with (2) transformers and a new utility vault. The (2) proposed transformers are currently in MVEC yard; which can be designated for this project. For your review, attached is the MVEC Proposed Service, Sheet E-601 Electrical One Line Diagram, and the Utility Yard coordination shop drawing. Please have the A/E/O team review this installation.

Relevant / Reference Contract Documents

Sheet E-601

Response:

GRAPHIC SCALE: 1" = 1'-0" | GRAPHIC SCALE: 3/4" = 1'-0" | GRAPHIC SCALE: 1/2" = 1'-0" | GRAPHIC SCALE: 3/8" = 1'-0" | GRAPHIC SCALE: 1/4" = 1'-0" | GRAPHIC SCALE: 3/16" = 1'-0" | GRAPHIC SCALE: 1/8" = 1'-0" | GRAPHIC SCALE: 3/32" = 1'-0" | GRAPHIC SCALE: 1/16" = 1'-0" | GRAPHIC SCALE: 1/32" = 1'-0"

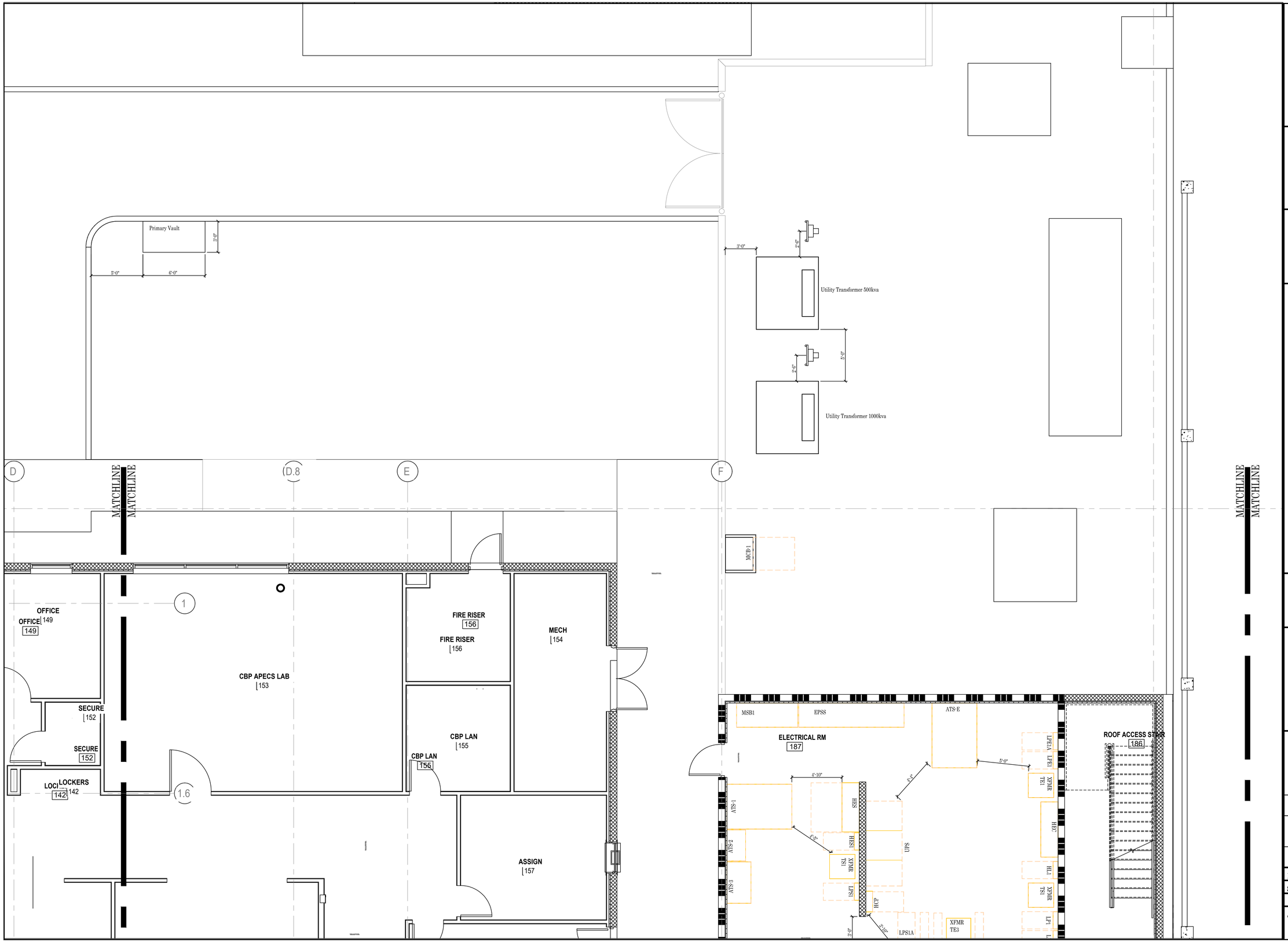

D&F INDUSTRIES, INC.
Electrical and Mechanical Contractors
P.O. Box 1680
Pharr, TX 78577
Phone: (956)781-2496
Fax: (956)781-0333

FOR REVIEW
DATE: 04/03/24 BY: CMQ

ENGINEER SEAL

Pharr FY16 DAP - Import Dock
And AG Lab Improvements

D&F RFI 6
Utility Yard MVEC Coord Layout

PLAN NORTH

TRUE NORTH

LEGEND:

REV	DATE	BY	DESCRIPTION

DATE Feb 18, 2025	DWN BY CMQ
SCALE 1/4" = 1' - 0"	CKD BY
ACAD FILE NAME	
JOB NO. 1293-1	DWG. NO. E1.0

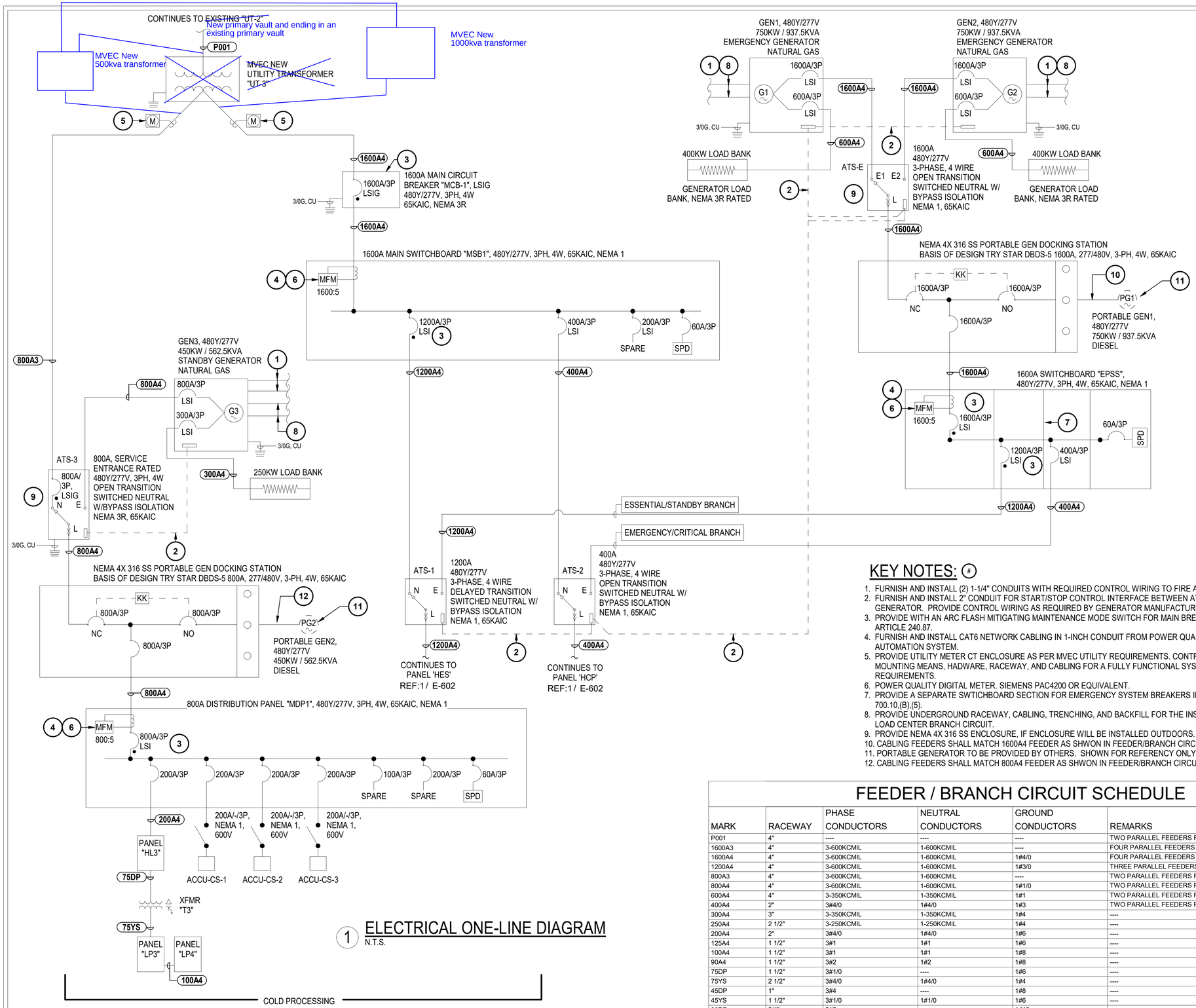

1 ELECTRICAL ONE-LINE DIAGRAM
N.T.S.

AVO# 33135

ONE LINE SYMBOLS LEGEND

MFM	MULTIFUNCTION POWER METER
M	UTILITY METER
	SOLID STATE POWER BREAKER WITH ARC ENERGY REDUCTION PER NEC, 240.87(A) 2017
	LOAD BANK EQUIPMENT
TAG#	FIXED EQUIPMENT
	UPS EQUIPMENT
ATS-# N E L	AUTOMATIC TRANSFER SWITCH
G#	POWER GENERATOR
PG#	PORTABLE POWER GENERATOR
#	INDUCTION ELECTRIC MOTOR # INDICATES RATED HORSEPOWER
	DISCONNECT SWITCH
	DRY TYPE DOE2016 TRANSFORMER
SPD	SURGE PROTECTION DEVICE
KK	KIRK KEY INTERLOCK MECHANISM

KEY NOTES: (#)

1. FURNISH AND INSTALL (2) 1-1/4" CONDUITS WITH REQUIRED CONTROL WIRING TO FIRE ALARM CONTROL PANEL.
2. FURNISH AND INSTALL 2" CONDUIT FOR START/STOP CONTROL INTERFACE BETWEEN ATS AND EMERGENCY GENERATOR. PROVIDE CONTROL WIRING AS REQUIRED BY GENERATOR MANUFACTURER.
3. PROVIDE WITH AN ARC FLASH MITIGATING MAINTENANCE MODE SWITCH FOR MAIN BREAKER AS REQUIRED BY NEC ARTICLE 240.87.
4. FURNISH AND INSTALL CAT6 NETWORK CABLING IN 1-INCH CONDUIT FROM POWER QUALITY METER TO BUILDING AUTOMATION SYSTEM.
5. PROVIDE UTILITY METER CT ENCLOSURE AS PER MVEC UTILITY REQUIREMENTS. CONTRACTOR SHALL PROVIDE MOUNTING MEANS, HADWARE, RACEWAY, AND CABLING FOR A FULLY FUNCTIONAL SYSTEM AS PER MVEC REQUIREMENTS.
6. POWER QUALITY DIGITAL METER. SIEMENS PAC4200 OR EQUIVALENT.
7. PROVIDE A SEPARATE SWTICHBOARD SECTION FOR EMERGENCY SYSTEM BREAKERS IN COMPLIANCE WITH NEC 700.10,(B),(5).
8. PROVIDE UNDERGROUND RACEWAY, CABLING, TRENCHING, AND BACKFILL FOR THE INSTALLATION OF GENERATOR LOAD CENTER BRANCH CIRCUIT.
9. PROVIDE NEMA 4X 316 SS ENCLOSURE, IF ENCLOSURE WILL BE INSTALLED OUTDOORS.
10. CABLING FEEDERS SHALL MATCH 1600A4 FEEDER AS SHWON IN FEEDER/BRANCH CIRCUIT SCHEDULE.
11. PORTABLE GENERATOR TO BE PROVIDED BY OTHERS. SHOWN FOR REFERENCY ONLY.
12. CABLING FEEDERS SHALL MATCH 800A4 FEEDER AS SHWON IN FEEDER/BRANCH CIRCUIT SCHEDULE.

FEEDER / BRANCH CIRCUIT SCHEDULE

MARK	RACEWAY	PHASE CONDUCTORS	NEUTRAL CONDUCTORS	GROUND CONDUCTORS	REMARKS
P001	4"	----	----	----	TWO PARALLEL FEEDERS REQUIRED
1600A3	4"	3-600KCMIL	1-600KCMIL	----	FOUR PARALLEL FEEDERS REQUIRED
1600A4	4"	3-600KCMIL	1-600KCMIL	1#4/0	FOUR PARALLEL FEEDERS REQUIRED
1200A4	4"	3-600KCMIL	1-600KCMIL	1#3/0	THREE PARALLEL FEEDERS REQUIRED
800A3	4"	3-600KCMIL	1-600KCMIL	----	TWO PARALLEL FEEDERS REQUIRED
800A4	4"	3-600KCMIL	1-600KCMIL	1#1/0	TWO PARALLEL FEEDERS REQUIRED
600A4	4"	3-350KCMIL	1-350KCMIL	1#1	TWO PARALLEL FEEDERS REQUIRED
400A4	2"	3#4/0	1#4/0	1#3	TWO PARALLEL FEEDERS REQUIRED
300A4	3"	3-350KCMIL	1-350KCMIL	1#4	----
250A4	2 1/2"	3-250KCMIL	1-250KCMIL	1#4	----
200A4	2"	3#4/0	1#4/0	1#6	----
125A4	1 1/2"	3#1	1#1	1#6	----
100A4	1 1/2"	3#1	1#1	1#8	----
90A4	1 1/2"	3#2	1#2	1#8	----
75DP	1 1/2"	3#1/0	----	1#6	----
75YS	2 1/2"	3#4/0	1#4/0	1#4	----
45DP	1"	3#4	----	1#8	----
45YS	1 1/2"	3#1/0	1#1/0	1#6	----
30DP	3/4"	3#6	----	1#10	----

ISSUED FOR CONSTRUCTION

10-14-2022
STATE OF TEXAS
GABRIEL BENAVIDES JR.
119255
LICENSED PROFESSIONAL ENGINEER

Pharr
CITY OF PHARR, TEXAS

GSA
GENERAL SERVICES ADMINISTRATION
819 TAYLOR STREET
FORT WORTH, TEXAS 76102-6195
817-978-3334
www.gsa.gov

©2018
TEXAS DEPARTMENT OF TRANSPORTATION

HALFF
5000 WEST MILITARY, SUITE 100, McALLEN, TEXAS 78503
TEL (956) 664-0286 FAX (956) 664-0282 TBPE FIRM #F-312

PHARR FY16 DAP - IMPORT DOCK AND AG LAB IMPROVEMENTS

ELECTRICAL ONE-LINE DIAGRAM

SCALE: AS NOTED	SHEET OF			
DN:	CONT	SECT	JOB	HIGHWAY
CK DN:	921	02	424,425,433	PHARR INT. BRIDGE
DW:	DIST		COUNTY	SHEET NO.
CK DW:	PHR		HIDALGO	E-601
TR:				
CK TR:				

Capote Central Ave
Capote Central Ave
Capote Central Ave
Capote Central Ave
S Cage Blvd
Pharr Texas Port of Entry
MVEC PRIMARY VAULT - EXISTING
4" SCHEDULE 40 PVC - MINIMUM DEPTH OF 48"
MVEC PRIMARY VAULT- PROPOSED
MVEC EXISTING TRANSFORMER
MVEC 1000 KVA TRANSFORMER - PROPOSED
MVEC 500 KVA TRANSFORMER - PROPOSED
10 CN 37528
15 35978
300 69737
25-35146
25-35142
25-35143
15-73514
15-73513
15-73512
10 95669
750 26849
DG
25 97261
75 100029
500 27940
750 73430
75 90652
75 42408
Esri Community Maps Contributors, Texas Parks & Wildlife, © OpenStreetMap, Microsoft, CONANP, Esri, TomTom, Garmin, Foursquare, SafeGraph, GeoTech

PCO #013

D. Wilson Construction
PO Box 3455
McAllen, Texas 78502
Phone: (956) 686-9573

Project: 24-235 - Pharr FY16 DAP-Agricultural Lab, Dock Expansion I & II
9901 S Cage Blvd
Pharr, Texas 78577

DRAFT

Prime Contract Potential Change Order #013: Construction Exit Savings

TO:	City Of Pharr PO Box 1729 Pharr, Texas 78577	**FROM:**	D Wilson Construction Company PO Box 3455 McAllen, Texas 78502
PCO NUMBER/REVISION:	013 / 0	**CONTRACT:**	24-235 - City of Pharr Dock Expansion
REQUEST RECEIVED FROM:	Rolando Ayala **(Brownstone Consultants, LLC)**	**CREATED BY:**	Pilar Anzaldua-Garza **(D Wilson Construction Company)**
STATUS:	Draft	**CREATED DATE:**	5/13/2025
REFERENCE:	VE	**PRIME CONTRACT CHANGE ORDER:**	None
EXECUTED:	No	**SIGNED CHANGE ORDER RECEIVED DATE:**	
SCHEDULE IMPACT:		**TOTAL AMOUNT:**	($14,383.00)

POTENTIAL CHANGE ORDER TITLE: Construction Exit Savings

CHANGE REASON: Client Request

POTENTIAL CHANGE ORDER DESCRIPTION: *(The Contract Is Changed As Follows)*
CE #017 - Credit for Construction Entrance Savings
Credits for Construction Exit savings. As a budget savings, we can offer the following cost savings to the Construction Entrance Line Item 506-6020.

The Original Budget for 56-6020 Construction Exit was 49,595.00 (700 LF @ 70.85 = 49,595.00)
To date, we've spent $30,961.45 and estimate an additional $4,250 to relocate it to the East Side = $35,212.00
Leaving a surplus of $14,343.00

ATTACHMENTS:

#	Budget Code	Description	Amount
1	001.02-006.S	Savings on Construction Entrance materials and labor not used.	$(14,383.00)
		Grand Total:	**$(14,383.00)**

Brownstone Consultants, LLC
P.O. Box 3898
McAllen, Texas 78505

SIGNATURE 05-21-2025 **DATE**

City Of Pharr
PO Box 1729
Pharr, Texas 78577

SIGNATURE Maria Luisa Rangel 5/26/2025 **DATE**

D Wilson Construction Company
PO Box 3455
McAllen, Texas 78502

SIGNATURE **DATE**

CHANGE ORDER WORKSHEET

PROJECT: **24-235 Pharr FY16 DAP Ag Bldg, Cold Storage & Dock Expansion** **$ (14,383)**

DESCIPTION: **PCO 13 Savings on Construction Entrance**

Please add 10% for overhead, 5% for profit, 1.5 % for Insurance and 1% for bond, cumulatively.

						Cost Subcontractor
01-000	GENERAL CONDITIONS					
			Subtotal			
				$		-
02-000	SITEWORK			$		-
506-6020	Construction Exit origial Budget	-700	LF	70.85	$	(49,595.00)
COSTS TO DATE					$	-
506-6020	Materials (FOD Panels)	10	EA	2400	$	24,000.00
506-6020	Labor to Install	10	EA	402	$	4,020.00
506-6020	Overhead and Profit 5%	1.05	2802	2,802	$	2,942.10
Anticipated Costs to Relocate					$	-
506-6020	Estimate to relocate entrance to East side	10	EA	425	$	4,250.00
			Subtotal		$	(14,382.90)
				$		-
03-000	CONCRETE			$		-
04-000	MASONRY			$		-
			Subtotal			
				$		-
05-000	STRUCTURAL STEEL			$		-
06-000	CARPENTRY & MILLWORK			$		-
07-000	MOISTURE PROTECTION			$		-
08-000	DOORS & WINDOWS			$		-
09-000	FINISHES			$		-
10-000	SPECIALTIES			$		-
15-000	HVAC & PLUMBING			$		-
			Subtotal			
16-000	Electrical			$		-
			Subtotal	$		-
			Combined Cost	$		(14,382.90)
				$		(14,382.90)

Comments / Clarifications:

1. The Original Budget for 56-6020 Construction Exit was 49,595.00 (700 LF @ 70.85 $49,595.00)
2. To date, we've spent $30,961.45 Materials & labor to install
   $ 4,250.00 Est. to relocate it
   $35,212.00 Total Expenses
3. Leaving a surplus of $14,383.00

Cost	$	(14,382.90)
OH, Insurance & Bonds		
Profit 5%		
Ins 1.5%		
Bond 1%		
Subtotal	$	(14,383)
Potential Change Order Total	$	(14,383)

PCO #014

D. Wilson Construction
PO Box 3455
McAllen, Texas 78502
Phone: (956) 686-9573

Project: 24-235 - Pharr FY16 DAP-Agricultural Lab, Dock Expansion I & II
9901 S Cage Blvd
Pharr, Texas 78577

DRAFT

Prime Contract Potential Change Order #014: ASI 01 Credit for Gas Changes

TO:	City Of Pharr PO Box 1729 Pharr, Texas 78577	**FROM:**	D Wilson Construction Company PO Box 3455 McAllen, Texas 78502
PCO NUMBER/REVISION:	014 / 0	**CONTRACT:**	24-235 - City of Pharr Dock Expansion
REQUEST RECEIVED FROM:	Rolando Ayala **(Brownstone Consultants, LLC)**	**CREATED BY:**	Pilar Anzaldua-Garza **(D Wilson Construction Company)**
STATUS:	Draft	**CREATED DATE:**	5/19/2025
REFERENCE:	ASI 01 Rev	**PRIME CONTRACT CHANGE ORDER:**	None
EXECUTED:	No	**SIGNED CHANGE ORDER RECEIVED DATE:**	
SCHEDULE IMPACT:		**TOTAL AMOUNT:**	($11,811.24)

POTENTIAL CHANGE ORDER TITLE: ASI 01 Credit for Gas Changes

CHANGE REASON: Existing Condition

POTENTIAL CHANGE ORDER DESCRIPTION: *(The Contract Is Changed As Follows)*
CE #018 - ASI 01 Gas Line Changes
496-6152 - Remove STR - Gas Main. As per ASI 01 - C-007 provide credit for 602 LF of gas main - previous quantities per plan 1222, remaining to remove 620 LF.

ATTACHMENTS:

#	Budget Code	Description	Amount
1	001.02-050.S	496-6152 - Remove STR - Gas Main. As per ASI 01 - C-007 provide credit for 602 LF of gas main - previous quantities per plan 1222, remaining to remove 620 LF.	$(11,811.24)
		Grand Total:	**$(11,811.24)**

Brownstone Consultants, LLC	**City Of Pharr**	**D Wilson Construction Company**
P.O. Box 3898	PO Box 1729	PO Box 3455
McAllen, Texas 78505	Pharr, Texas 78577	McAllen, Texas 78502
05/29/2025	Maria Luisa Rangel 06/11/2025	
SIGNATURE **DATE**	**SIGNATURE** **DATE**	**SIGNATURE** **DATE**

CHANGE ORDER WORKSHEET

PROJECT: **24-235 Pharr FY16 DAP Ag Bldg, Cold Storage & Dock Expansion** **5/27/2025**

DESCIPTION: **PCO 14 ASI 01 - GAS LINE CHANGES**

Please add 5% for overhead & profit and 1% for bond, cumulatively.

					Cost Subcontractor
01-000	GENERAL CONDITIONS				
					$ -
			Subtotal		$ -
02-000	SITEWORK				
496-6152	Credit for 602 LF removal of Gas L	-602 lf	$ 19.620		$ (11,811.24)
			Subtotal		$ (11,811.24)
03-000	CONCRETE				
			Subtotal		$ -
04-000	MASONRY				
			Subtotal		$ -
05-000	STRUCTURAL STEEL				
			Subtotal		$ -
06-000	CARPENTRY & MILLWORK				
			Subtotal		$ -
07-000	MOISTURE PROTECTION				
			Subtotal		$ -
08-000	DOORS & WINDOWS				
			Subtotal		$ -
09-000	FINISHES				
			Subtotal		$ -
10-000	SPECIALTIES				
			Subtotal		$ -
15-000	HVAC & PLUMBING				
		0 LF	$ -		$ -
		0 LF	$ -		$ -
			Subtotal		$ -
16-000	Electrical				
			Subtotal		$ -
			Combined Cost		$ (11,811.24)

Comments / Clarifications:
ASI 01 - Omitted the removal of 602 LF of gas line item 496-6152 by Gonzalez
ASI 01 Added 35 LF of Gase Pipe 2" Diameter Item 7401-6004 by TO BE ADDED AS OVER RUN IF NEEDED IN FUTURE.

Cost	$	(11,811.24)
OH, Insurance & Bonds		
Bond 1%		
Subtotal	$	(11,811.24)

D. WILSON CONSTRUCTION CO.

PROJECT : **24-235 Pharr FY16 DAP Ag Bldg, Cold Storage & Dock Expansion**

PCO 14 **ASI 01 - GAS LINE CHANGES**

DESCRIPTION	QUANTITY	UNIT	UNIT COST L	UNIT COST M	UNIT COST S	LABOR	MATERIAL	SUB
						-	-	-
						-	-	-
496-6152 Remove Gas Line		lf				-	-	-
Original Plans 1,222 LF		lf				-	-	-
ASI 01 - Remove Gas Line 620 LF		lf				-	-	-
Credit for 602 LF removal of Gas Line	-602	lf			19.62	-	-	(11,811.24)
						-	-	-
						-	-	-
						-	-	-
						-	-	-
						-	-	-
						-	-	-
						-	-	-
						-	-	-
						-	-	-
						-	-	-
						-	-	-
						-	-	-
						-	-	-
						-	-	-
						-	-	-
						-	-	-
						-	-	-
						-	-	-
						-	-	-
						-	-	-
						-	-	-
						-	-	-
						-	-	-
						-	-	-
						-	-	-
						-	-	-
						-	-	-
						-	-	-
						-	-	-
						-	-	-
SUBTOTALS						-	-	(11,811.24)

TOTAL **(11,811)**

Sheet No. 1 **Item:** **ASI 01 - GAS LINE CHANGES**

November 13, 2024
57325.002

ASI 001

Pharr FY16 DAP - Agricultural Lab, Dock Expansion I & II
City of Pharr
GSA & CBP
TxDOT

This Modification shall be considered part of the Bidding/Construction Documents and is issued to change, amplify, add to, delete from, or otherwise explain the plans and specifications. Where provisions of this Modification differ from those of the original Bidding/Construction Documents, this Modification shall take precedence over the original plans and specifications and shall govern.

CONSTRUCTION DOCUMENT SHEETS

C-007

- Reduction in quantity for Item 496 6152 – REMOV STR (GAS MAIN) from 1222 Linear Feet to 620 Linear Feet.
- Addition of quantity for item 7401 6006 – GAS PIPE 2" DIA. From 1409 Linear Feet to 1444 Linear Feet.

C-009

- Reduction in quantity for Item 496 6152 – REMOV STR (GAS MAIN) from 1222 Linear Feet to 620 Linear Feet.
- Addition of quantity for item 7401 6006 – GAS PIPE 2" DIA. From 1409 Linear Feet to 1444 Linear Feet.

C-012

- Existing gas line servicing the DAP FY 15 Generators are represented on the sheet as an approximate location.
- Removal of "existing" natural gas line (north and south segment, from Prime Canopy to north bend) linework and callout, this line was removed during a previous project's construction activity.
- Reduction in quantity for Item 496 6152 – REMOV STR (GAS MAIN) from 1222 Linear Feet to 620 Linear Feet.

C-202

- Reestablished the control point: GSA NO. 4 Concrete monument w/ alum. Disk to a nearby location.
- Establish a new control point: GSA NO. 9 Concrete monument w/ alum. Disk stamped "HALFF".

C-203

- Reestablished the control point: GSA NO. 4 Concrete monument w/ alum. Disk to a nearby location.

C-401

- Realignment for the proposed Natural Gas Line to maintain service to DAP FY 15 Generators.

C-402

- Decrease of quantity for item 7401 6006 – GAS PIPE 2” DIA. From 354 Linear Feet to 309 Linear Feet.

ESTIMATE QUANTITY AGRICULTURAL LAB CSJ: 0921-02-433

ITEM CODE		DESCRIPTION	UNIT	TOTAL	
ITEM CODE	DESC. CODE			EST.	FINAL
100	6002	PREPARING ROW	AC	7	
104	6001	REMOVING CONC (PAV)	SY	6080	
104	6015	REMOVING CONC (SIDEWALKS)	SY	28	
104	6022	REMOVING CONC (CURB AND GUTTER)	LF	1450	
110	6001	EXCAVATION	CY	6546	
132	6006	EMBANKMENT (FINAL)(DENS CONT)(TY C)	CY	4335	
160	6003	FURNISHING AND PLACING TOPSOIL (4")	SY	4975	
164	6027	CELL FBR MLCH SEED (PERM) (URBAN) (CLAY)	SY	4975	
164	6100	LANDSCAPING & IRRIGATION	LS	1	
168	6001	VEGETATIVE WATERING	MG	50	
216	6001	PROOF ROLLING	HR	20	
260	6043	LIME (HYD, COM OR QK)(SLURRY)	TON	761	
260	6084	LIME TRT (SUBGRADE) (12")	SY	21774	
292	6004	ASPHALT STAB BASE (GR 2)(PG 76)	TON	744	
310	6009	PRIME COAT (MC-30)	GAL	4355	
3076	6050	D-GR HMA TY-D SAC-B PG76-22	TON	6066	
360	6001	CONC PVMT (CONT REINF - CRCP) (7")	SY	1050	
360	6015	CONC PVMT (CONT. REINF - CRCP) (12 1/2")	SY	20652	
400	6007	CUT & RESTORE CONC PAVING	SY	520	
402	6001	TRENCH EXCAVATION PROTECTION	LF	1828	
420	6007	CL A CONC (FLUME)	CY	2	
423	6050	SLAB ON GRADE 6" (COMPLETE) W/FORMS, FILL, REINF, FINISH	SF	1260	
423	6051	CONC PADS FOR EMERG GENERATORS - 12' THICK	SF	715	
423	6052	CONC STRIP FOOTING (1'-6" X 2'-6" DEPTH)	CY	35	
423	6053	CONC STRIP FOOTING (4'-0" X 3'-2" DEPTH)	CY	6	
423	6054	CMU WALL (8") W/ REINF, CLN & PT 2-S (SHAFOLDING)	SF	1790	
442	6040	METAL GRATING WALKWAYS, STEPS, & RAILING (EM GEN)	SF	120	
464	6017	RC PIPE (CL IV) (18IN)	LF	164	
464	6018	RC PIPE (CL IV) (24IN)	LF	1495	
464	6019	RC PIPE (CL IV) (30IN)	LF	83	
465	6002	MANH (COMPL) (PRM) (48IN)	EA	1	
465	6004	MANH (COMPL) (PRM) (72IN)	EA	1	
465	6127	INLET (COMPL) (PSL) (FG) (4FTX4FT-3FTX3FT)	EA	5	
465	6137	INLET (COMPL) (PSL) (FG) (5FTX6FT-3FTX3FT)	EA	2	
465	6700	CONNECT TO EXISTING INLET/STORM LINE	EA	3	
467	6388	SET (TY II) (24IN) (RCP) (3:1)	EA	3	
496	6002	REMOV STR (INLET)	EA	2	
496	6018	REMOV STR (CONC)	EA	6	
496	6201	REMOV STR (TEL/COMM DUCTBANK UNDERGROUND)	LF	1088	
496	6202	REMOV STR (TEL/COMM MANHOLE)	EA	1	
496	6150	REMOV STR (WATER MAIN) (8")	LF	556	
496	6151	REMOV STR (STORM SEWER)	LF	535	
496	6152	REMOV STR (GAS MAIN)	LF	620	1
496	6153	REMOV STR (ELECTRICAL DUCTBANK UNDERGROUND)	LF	1883	
496	6154	REMOV STR (ELECTRICAL BOX)	EA	4	
496	6155	REMOV STR (SITE POLE LITE)	EA	4	
500	6001	MOBILIZATION	LS	1	
502	6001	BARRICADES, SIGNS, AND TRAFFIC HANDLING	MO	22	
506	6020	CONSTRUCTION EXITS (INSTALL) (TY 1)	SY	700	
506	6024	CONSTUCTION EXITS (REMOVE)	SY	700	
506	6038	TEMP SEDMT CONT FENCE (INSTALL)	LF	1350	
506	6039	TEMP SEDMT CONT FENCE (REMOVE)	LF	1350	
506	6047	TEMP SDMT CONT FENCE (INLET PROTECTION) (INSTALL)	LF	196	
506	6047	TEMP SDMT CONT FENCE (INLET PROTECTION) (REMOVE)	LF	196	
506	6060	EROSION CONTROL MAINTENANCE	MO	18	
529	6005	CONC CURB (MONO) (TY II)	LF	1542	
531	6001	CONC SIDEWALKS (4")	SY	235	
531	6004	CURB RAMPS (TY 1)	EA	1	
531	6005	CURB RAMPS (TY 2)	EA	2	
550	6008	CHAIN LINK FENCE (INSTALL) (8') GALV SL, 6 GA., 2" POSTS @ 10' OC, INCL BASE	LF	1905	
550	6040	CHAIN LINK FENCE (INSTALL) (8') GALV SL, 6 GA., POSTS INCL BASE	EA	1	

ESTIMATE QUANTITY AGRICULTURAL LAB CSJ: 0921-02-433

ITEM CODE		DESCRIPTION	UNIT	TOTAL	
ITEM CODE	DESC. CODE			EST.	FINAL
618	6033	2-4" PVC CONDUITS, F/O" 12 STRAND, 100 PR CAT 6 CUC CA. CONC ENCASSEMENT. & EXCAV, BF, CMPT	LF	1723	
618	6034	4" PVC CONDUIT, 100 PR CAT 6 CU CA. CONC ENCASEMENT. & EXCAV, BF, CMPT	LF	1600	
636	6002	ALUMINUM SIGNS (TY G)	SF	24	
644	6001	IN SM RD SN SUP&AM TY10BWG(1)SA(P)	EA	2	
666	6309	RE PM W/RET REQ TY I (W) 6" (SLD) (100 MIL)	LF	11052	
666	6356	REFL PAV MRK TY II (R&W) 6" (FIRE LANE)	LF	3500	
668	6055	RE PM TY B (ACC PRK) (BL&WH) (W/BORDER) LG	EA	2	
690	6027	REMOVAL OF SIGNAL RELATED SIGNS	EA	10	
690	6127	REMOVE LUMINAIRE POLE	EA	4	
4122	6050	HDPE (18 IN) STORM SEWER LINE	LF	150	
4122	6051	HDPE STORM DRAIN BASIN	EA	3	
5008	6001	WHEEL STOPS	EA	2	
5084	6001	FIXED BOLLARD	EA	30	
6500	6001	STNLS STL WALL MTD PULL BOX (3'X3'X3')	EA	1	
6500	6002	H-SERIES POLYMER PULL BOX (4'X4'X4')	EA	5	
6500	6003	CONNECT TO EXISTING COMM DUCTBANK & PROTECT EXISTING	LS	1	
6500	6004	UTILITY TRANSFORMER, 480/277V, 3-PH, 4-W SECY	EA	1	
6500	6005	ELECT METER	EA	1	
6500	6006	GROUND ROD (COMPLETE)	EA	1	
6500	6007	800A4 - 2/4" COND - 4-600 KMIL, #1/0 89600) 2(1/0) 2(4")	LF	125	
6500	6008	1600A4 - 4/4" COND - 4-600 KML, #4/0 16(600) 4(4/0) 4(4")	LF	75	
6500	6009	RELOCATE EXISTING ELECTRICAL SERVICE EQUIPMENT. DISCONNECT CONDUIT FROM ENCLOSED CIRCUIT BREAKER. SAW CINC SLAB TO REMOVE UNGRD CONDUIT. VERIFY EQUIP BEING FED. WORK TO BE DONE DURING NON-OPERATING HOURS. DEMOLITION OF STORAGE BLDG APPROX 400SF. DEMO CMU WALL. SITE IMPROVEMENTS: CMU WALL, CONC SLAB & FOUNDATION, UTILITTY YARD GATE 12'W X 7' HI-GALV SQ POSTS, 2" CORR METAL PNLS	LS	1	
7017	6004	SANITARY SEWER (6") (PVC) (C900)	LF	23	
7017	6005	SANITARY SEWER (8 IN) (PVC) (C900)	LF	210	
7017	6015	SANITARY SEWER (4 IN) (PVC) (C900)	LF	6	
7017	6051	MANHOLE (SAN SEWER) (4' DIA)	EA	3	
7017	6200	YARD CLEAN OUTS	EA	8	
7017	6201	SAND/OIL SEPARATOR	EA	1	
7112	6002	PRESSURE WTR PIPE C-900 DR-18 PVC 8"	LF	127	
7112	6003	PRESSURE WTR PIPE C-900 DR-18 PVC 6"	LF	486	
7112	6004	CONNECT TO EXISTING WATER LINE 8"	EA	2	
7112	6011	GATE VALVE W/ BOX ASSEMBLY 8"	EA	2	
7112	6015	FIRE HYDRANT, VALVE & ASSEMBLY	EA	2	
7049	6373	SERVICE LINE (SHORT SIDE)(2-1/2" TO 4")	LF	9	
7112	6041	COMPOUND WATER METER 2-1/2" DIA	EA	1	
7112	6042	BOX, MISC VALVES, FITTINGS	EA	1	
7112	6043	DOUBLE CHECK VALVE BACKFLOW ASSEMBLY	LS	1	
7112	6044	VAULT, MISC VALVES, FITTINGS	LS	1	
7112	6045	FREE STANDING FDC	EA	1	
7112	6046	4" FDC LINE	LF	240	
7266	6036	ENCASEMENT PIPE (16")	LF	24	
7400	6001	ACID WASTE PIPE 3" DIA.	LF	25	
7400	6002	ACID WASTE PIPE 4" DIA.	LF	75	
7400	6003	ACID WASTE SAMPLE WELL	EA	2	
7401	6001	GAS PIPE 1/2" DIA.	LF	225	
7401	6002	GAS PIPE 3/4" DIA.	LF	150	
7401	6003	GAS PIPE 1" DIA.	LF	200	
7401	6004	GAS PIPE 2" DIA.	LF	1444	1
7401	6005	GAS CONNECTIONS	LS	1	
9700	6003	AGRICULTURAL LAB BUILDING (COMPLETE)	LS	1	

halff

November 13, 2024
57325.002

ASI 001

Pharr FY16 DAP - Agricultural Lab, Dock Expansion I & II
City of Pharr
GSA & CBP
TxDOT

This Modification shall be considered part of the Bidding/Construction Documents and is issued to change, amplify, add to, delete from, or otherwise explain the plans and specifications. Where provisions of this Modification differ from those of the original Bidding/Construction Documents, this Modification shall take precedence over the original plans and specifications and shall govern.

CONSTRUCTION DOCUMENT SHEETS

C-007
- Reduction in quantity for Item 496 6152 – REMOV STR (GAS MAIN) from 1222 Linear Feet to 620 Linear Feet.
- Addition of quantity for item 7401 6006 – GAS PIPE 2" DIA. From 1409 Linear Feet to 1444 Linear Feet.

C-009
- Reduction in quantity for Item 496 6152 – REMOV STR (GAS MAIN) from 1222 Linear Feet to 620 Linear Feet.
- Addition of quantity for item 7401 6006 – GAS PIPE 2" DIA. From 1409 Linear Feet to 1444 Linear Feet.

C-012
- Existing gas line servicing the DAP FY 15 Generators are represented on the sheet as an approximate location.
- Removal of "existing" natural gas line (north and south segment, from Prime Canopy to north bend) linework and callout, this line was removed during a previous project's construction activity.
- Reduction in quantity for Item 496 6152 – REMOV STR (GAS MAIN) from 1222 Linear Feet to 620 Linear Feet.

C-202
- Reestablished the control point: GSA NO. 4 Concrete monument w/ alum. Disk to a nearby location.
- Establish a new control point: GSA NO. 9 Concrete monument w/ alum. Disk stamped "HALFF".

C-203
- Reestablished the control point: GSA NO. 4 Concrete monument w/ alum. Disk to a nearby location.

C-401
- Realignment for the proposed Natural Gas Line to maintain service to DAP FY 15 Generators.

C-402
- Decrease of quantity for item 7401 6006 – GAS PIPE 2" DIA. From 354 Linear Feet to 309 Linear Feet.

STATE OF TEXAS
SOLVEIG A. KLASSEN
147784
LICENSED
PROFESSIONAL ENGINEER
11/13/2024
S. Klassen

REVISION LOG		
NO.	DATE	DESCRIPTION
1	11/13/2024	ASI 001

ISSUED FOR CONSTRUCTION

STATE OF TEXAS
ROBERT L. SAENZ
82072
REGISTERED
PROFESSIONAL ENGINEER
5-13-2024

Pharr
CITY OF PHARR, TEXAS

GSA
GENERAL SERVICES ADMINISTRATION
819 TAYLOR STREET
FORT WORTH, TEXAS 76102-6195
817-978-3334
www.gsa.gov

© 2018
TEXAS DEPARTMENT OF TRANSPORTATION

halff
5000 WEST MILITARY, SUITE 100, McALLEN, TEXAS 78503
TEL (956) 664-0286 FAX (956) 664-0282 TBPE FIRM #F-312

PHARR FY16 DAP - IMPORT DOCK AND AG LAB IMPROVEMENTS

ESTIMATE QUANTITY

SCALE: AS NOTED	SHEET 1 OF 2			
DN:	CONT	SECT	JOB	HIGHWAY
CK DN:	921	02	424,425,433	PHARR INT. BRIDGE
DW: IE	DIST		COUNTY	SHEET NO.
CK DW: RD	PHR		HIDALGO	C-007
TR:				
CK TR:				

AGRICULTURAL LAB CSJ: 0921-02-433 REMOVAL SUMMARY

LOCATION (SHEET)	100-6002	104-6001	104-6015	104-6022	496-6002	496-6018	496-6150	496-6151	496-6152	496-6153	496-6154	496-6155	496-6201	496-6202	690-6027	690-6127
	PREPARING ROW	REMOVING CONC (PAV)	REMOVING CONC (SIDEWALK)	REMOVING CONC (CURB AND GUTTER)	REMOV STR (INLET)	REMOV STR (CONC)	REMOV STR (WATER MAIN) (8")	REMOV STR (STORM SEWER)	REMOV STR (GAS MAIN)	REMOV STR (ELECTRICAL DUCTBANK UNDERGROUND)	REMOV STR (ELECTRICAL BOX)	REMOV STR (SITE POLE LITE)	REMOV STR (TEL/COMM DUCTBANK UNDERGROUND)	REMOV STR (TEL/COMM MANHOLE)	REMOVAL OF SIGNAL RELATED SIGNS	REMOVE LUMINAIRE POLE
	AC	SY	SY	LF	EA	EA	LF	LF	LF	LF	EA	EA	LF	EA	EA	EA
C-012	7	6080	28	1450	2	6	556	535	603	1883	4	4	1088	1	10	4
TOTAL	7	6080	28	1450	2	6	556	535	603	1883	4	4	1088	1	10	4

AGRICULTURAL LAB CSJ: 0921-02-433 DRAINAGE SUMMARY

LOCATION (SHEET)	464-6017	464-6018	464-6019	465-6002	465-6004	465-6127	465-6137	465-6700	467-6388	4122-6050	4122-6051
	RC PIPE (CL IV) (18IN)	RC PIPE (CL IV) (24IN)	RC PIPE (CL IV) (30IN)	MANH (COMPL) (PRM) (48IN)	MANH (COMPL) (PRM) (72IN)	INLET (COMPL) (PSL) (FG) (4FTX4FT-3FTX3FT)	INLET (COMPL) (PSL) (FG) (5FTX6FT-3FTX3FT)	CONNECT TO EXISTING -INLET/STORM LINE	SET (TY II) (24IN) (RCP) (3:1)	HDPE (18IN) STORM SEWER LINE	HDPE STORM DRAIN BASIN
	LF	LF	LF	EA	EA	EA	EA	EA	EA	LF	EA
C-303	164	1495	83	1	1	5	2	3	3	0	0
C-304	0	0	0	0	0	0	0	0	0	150	3
TOTAL	164	1495	83	1	1	5	2	3	3	150	3

AGRICULTURAL LAB CSJ: 0921-02-433 PAVING SUMMARY

LOCATION (SHEET)	110-6001	132-6006	260-6043	260-6084	292-6004	310-6009	3076-6050	360-6001	360-6015	400-6007	420-6007	500-6001	529-6005	531-6001	531-6004	531-6005
	EXCAVATION	EMBANKMENT (FINAL)(DENS CONT) (TY C)	LIME (HYD, COM OR OK) (SLURRY)	LIME TRT (SUBGRADE) (12")	ASPHALT STAB BASE (GR 2) (PG 76)	PRIME COAT (MC-30)	D-GR HMA TY-D SAC-B PG76-22	CONC PVMT (CONT. REINF CRCP) (7")	CONC PVMT (CONT. REINF CRCP) (12-1/2")	CUT & RESTORE CONC PAVING	CL A CONC (FLUME)	MOBILIZATION	CONC CURB (MONO) (TY II)	CONC SIDEWALKS (4")	CURB RAMPS (TY 1)	CURB RAMPS (TY 2)
	CY	CY	TON	SY	TON	GAL	TON	SY	SY	SY	CY	LS	LF	SY	EA	EA
C-206	6546	4335	761	20652	594	4131	6066	0	20652	520	0	1	728	0	0	0
C-207	0	0	0	1122	150	224	0	1050	0	0	2	0	814	235	1	2
TOTAL	6546	4335	761	21774	744	4355	6066	1050	20652	520	2	1	1542	235	1	2

AGRICULTURAL LAB CSJ: 0921-02-433 PAVEMENT MARKINGS & SIGNS SUMMARY

LOCATION (SHEET)	502-6001	644-6001	666-6309	668-6055	666-6356
	BARRICADES, SIGNS, AND TRAFFIC HANDLING	IN SM RD SN SUP&AM TY10BWG(1)SA(P)	RE PM W/RET REQ TY I (W) (6") (SLD) (100 MIL)	PRE PM TY B (ACC PRK) (BL&WH) (W/BORDER) LG	REFL PAV MRK TY II (R&W) 6" (FIRE LANE)
	MO	EA	LF	EA	LF
C-501	22	0	10467	0	3500
C-502	0	2	585	2	0
TOTAL	22	2	11052	2	3500

AGRICULTURAL LAB CSJ: 0921-02-433 MISCELLANEOUS ITEMS SUMMARY

LOCATION (SHEET)	7400-6001	7400-6002	7400-6003	7401-6001	7401-6002	7401-6003	7401-6005	7401-6006	9700-6003
	ACID WASTE PIPE 3" DIA.	ACID WASTE PIPE 4" DIA.	ACID WASTE SAMPLE WELL	GAS PIPE 1/2" DIA.	GAS PIPE 3/4" DIA.	GAS PIPE 1" DIA.	GAS CONNECTIONS	GAS PIPE 2" DIA.	AGRICULTURAL LAB BUILDING (COMPLETE)
	LF	LF	EA	LF	LF	LF	LS	LF	LS
C-011	25	75	2	225	150	200	1	0	1
C-401	0	0	0	0	0	0	0	1135	0
C-402	0	0	0	0	0	0	0	309	0
TOTAL	25	75	2	225	150	200	1	1444	1

NOTE: ALL GENERATORS FOR THE AG LAB ARE SUBSIDIARY TO THE BID AT NO EXTRA COST TO THE OWNER.

halff

November 13, 2024
57325.002

ASI 001

Pharr FY16 DAP - Agricultural Lab, Dock Expansion I & II
City of Pharr
GSA & CBP
TxDOT

This Modification shall be considered part of the Bidding/Construction Documents and is issued to change, amplify, add to, delete from, or otherwise explain the plans and specifications. Where provisions of this Modification differ from those of the original Bidding/Construction Documents, this Modification shall take precedence over the original plans and specifications and shall govern.

CONSTRUCTION DOCUMENT SHEETS

C-007
- Reduction in quantity for Item 496 6152 – REMOV STR (GAS MAIN) from 1222 Linear Feet to 620 Linear Feet.
- Addition of quantity for item 7401 6006 – GAS PIPE 2" DIA. From 1409 Linear Feet to 1444 Linear Feet.

C-009
- Reduction in quantity for Item 496 6152 – REMOV STR (GAS MAIN) from 1222 Linear Feet to 620 Linear Feet.
- Addition of quantity for item 7401 6006 – GAS PIPE 2" DIA. From 1409 Linear Feet to 1444 Linear Feet.

C-012
- Existing gas line servicing the DAP FY 15 Generators are represented on the sheet as an approximate location.
- Removal of "existing" natural gas line (north and south segment, from Prime Canopy to north bend) linework and callout, this line was removed during a previous project's construction activity.
- Reduction in quantity for Item 496 6152 – REMOV STR (GAS MAIN) from 1222 Linear Feet to 620 Linear Feet.

C-202
- Reestablished the control point: GSA NO. 4 Concrete monument w/ alum. Disk to a nearby location.
- Establish a new control point: GSA NO. 9 Concrete monument w/ alum. Disk stamped "HALFF".

C-203
- Reestablished the control point: GSA NO. 4 Concrete monument w/ alum. Disk to a nearby location.

C-401
- Realignment for the proposed Natural Gas Line to maintain service to DAP FY 15 Generators.

C-402
- Decrease of quantity for item 7401 6006 – GAS PIPE 2" DIA. From 354 Linear Feet to 309 Linear Feet.

STATE OF TEXAS
SOLVEIG A. KLASSEN
147784
LICENSED
PROFESSIONAL ENGINEER
11/13/2024
S. Klassen

REVISION LOG		
NO.	DATE	DESCRIPTION
1	11/13/2024	ASI 001

ISSUED FOR CONSTRUCTION

STATE OF TEXAS
ROBERT L. SAENZ
82072
REGISTERED
PROFESSIONAL ENGINEER
5-15-2024

Pharr
CITY OF PHARR, TEXAS

GSA
GENERAL SERVICES ADMINISTRATION
819 TAYLOR STREET
FORT WORTH, TEXAS 76102-6195
817-978-3334
www.gsa.gov

©2018
TEXAS DEPARTMENT OF TRANSPORTATION

halff
5000 WEST MILITARY, SUITE 100, McALLEN, TEXAS 78503
TEL (956) 664-0286 FAX (956) 664-0282 TBPE FIRM #F-312

PHARR FY16 DAP - IMPORT DOCK AND AG LAB IMPROVEMENTS

SUMMARIES

SCALE: AS NOTED	SHEET 1 OF 2			
DN:	CONT	SECT	JOB	HIGHWAY
CK DN:	921	02	424,425,433	PHARR INT. BRIDGE
DW: IE	DIST		COUNTY	SHEET NO.
CK DW: RD	PHR		HIDALGO	C-009
TR:				
CK TR:				

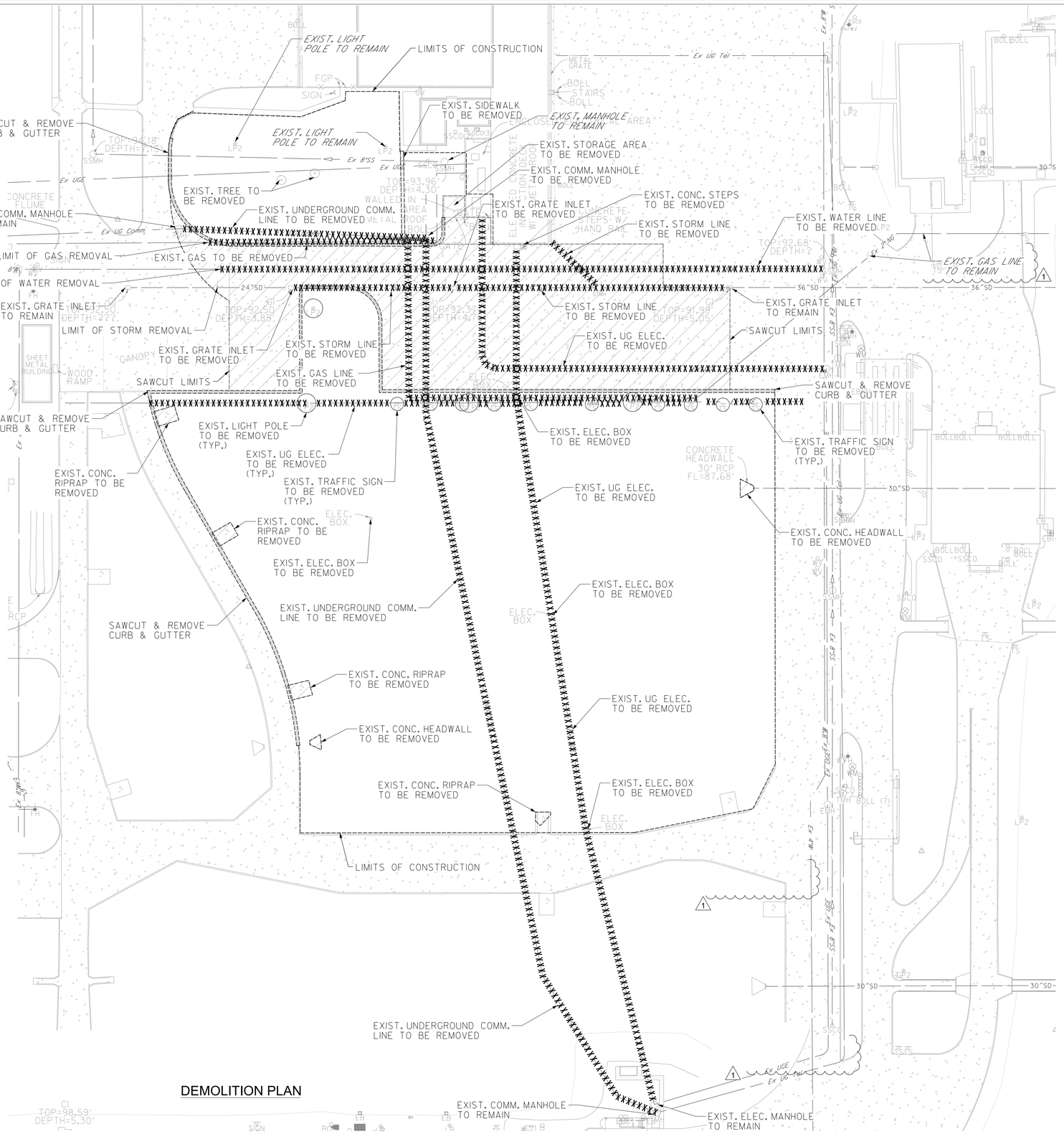

DEMOLITION PLAN

halff

November 13, 2024
57325.002

ASI 001
Pharr FY16 DAP - Agricultural Lab, Dock Expansion I & II
City of Pharr
GSA & CBP
TxDOT

This Modification shall be considered part of the Bidding/Construction Documents and is issued to change, amplify, add to, delete from, or otherwise explain the plans and specifications. Where provisions of this Modification differ from those of the original Bidding/Construction Documents, this Modification shall take precedence over the original plans and specifications and shall govern.

CONSTRUCTION DOCUMENT SHEETS

C-007
- Reduction in quantity for Item 496 6152 – REMOV STR (GAS MAIN) from 1222 Linear Feet to 620 Linear Feet.
- Addition of quantity for item 7401 6006 – GAS PIPE 2" DIA. From 1409 Linear Feet to 1444 Linear Feet.

C-009
- Reduction in quantity for Item 496 6152 – REMOV STR (GAS MAIN) from 1222 Linear Feet to 620 Linear Feet.
- Addition of quantity for item 7401 6006 – GAS PIPE 2" DIA. From 1409 Linear Feet to 1444 Linear Feet.

C-012
- Existing gas line servicing the DAP FY 15 Generators are represented on the sheet as an approximate location.
- Removal of "existing" natural gas line (north and south segment, from Prime Canopy to north bend) linework and callout, this line was removed during a previous project's construction activity.
- Reduction in quantity for Item 496 6152 – REMOV STR (GAS MAIN) from 1222 Linear Feet to 620 Linear Feet.

C-202
- Reestablished the control point: GSA NO. 4 Concrete monument w/ alum. Disk to a nearby location.
- Establish a new control point: GSA NO. 9 Concrete monument w/ alum. Disk stamped "HALFF".

C-203
- Reestablished the control point: GSA NO. 4 Concrete monument w/ alum. Disk to a nearby location.

C-401
- Realignment for the proposed Natural Gas Line to maintain service to DAP FY 15 Generators.

C-402
- Decrease of quantity for item 7401 6006 – GAS PIPE 2" DIA. From 354 Linear Feet to 309 Linear Feet.

N

0 25 50 75 100
SCALE: 1"=50'

LEGEND

LIMITS OF DEMOLITION	----------
EXISTING CONCRETE PAVEMENT TO BE REMOVED	
EXIST. UTIL. TO BE REMOVED	XXXXXXXXXX

SHEET SUMMARY (CSJ: 0921-02-433)

ITEM CODE	DESCRIPTION	UNIT	QUANTITY
104-6001	REMOVING CONC (PAV)	SY	6080
104-6015	REMOVING CONC (SIDEWALKS)	SY	28
104-6022	REMOVING CONC (CURB AND GUTTER)	LF	1450
496-6002	REMOV STR (INLET)	EA	2
496-6018	REMOV STR (CONC)	EA	6
496-6150	REMOV STR (WATER MAIN) (8")	LF	556
496-6151	REMOV STR (STORM SEWER)	LF	535
496-6152	REMOV STR (GAS MAIN)	LF	620 (1)
496-6153	REMOV STR (ELECTRICAL DUCTBANK UNDERGROUND)	LF	1883
496-6154	REMOV STR (ELECTRICAL BOX)	EA	4
496-6155	REMOV STR (SITE POLE LIGHT)	EA	4
496-6201	REMOV STR (TEL/COMM DUCTBANK UNDERGROUND)	LF	1088
496-6202	REMOV STR (TEL/COMM MANHOLE)	EA	1
690-6027	REMOVAL OF SIGNAL RELATED SIGNS	EA	10
690-6127	REMOVE LUMINAIRE POLE	EA	4

ISSUED FOR CONSTRUCTION

STATE OF TEXAS
ROBERT L. SAENZ
82072
REGISTERED PROFESSIONAL ENGINEER
5-15-2024

Pharr
CITY OF PHARR, TEXAS

GSA
GENERAL SERVICES ADMINISTRATION
819 TAYLOR STREET
FORT WORTH, TEXAS 76102-6195
817-978-3334
www.gsa.gov

©2018
TEXAS DEPARTMENT OF TRANSPORTATION

halff
5000 WEST MILITARY, SUITE 100, McALLEN, TEXAS 78503
TEL (956) 664-0286 FAX (956) 664-0282 TBPE FIRM #F-312

STATE OF TEXAS
SOLVEIG A. KLASSEN
147784
LICENSED PROFESSIONAL ENGINEER
11/13/2024
S. Klassen

PHARR FY16 DAP - IMPORT DOCK AND AG LAB IMPROVEMENTS

DEMOLITION PLAN

REVISION LOG		
NO.	DATE	DESCRIPTION
1	11/13/2024	ASI 001

SCALE: AS NOTED
DN:
CK DN:
DW: IE
CK DW: RD
TR:
CK TR:

SHEET 1 OF 1

CONT	SECT	JOB	HIGHWAY
921	02	424,425,433	PHARR INT. BRIDGE
DIST		COUNTY	SHEET NO.
PHR		HIDALGO	C-012

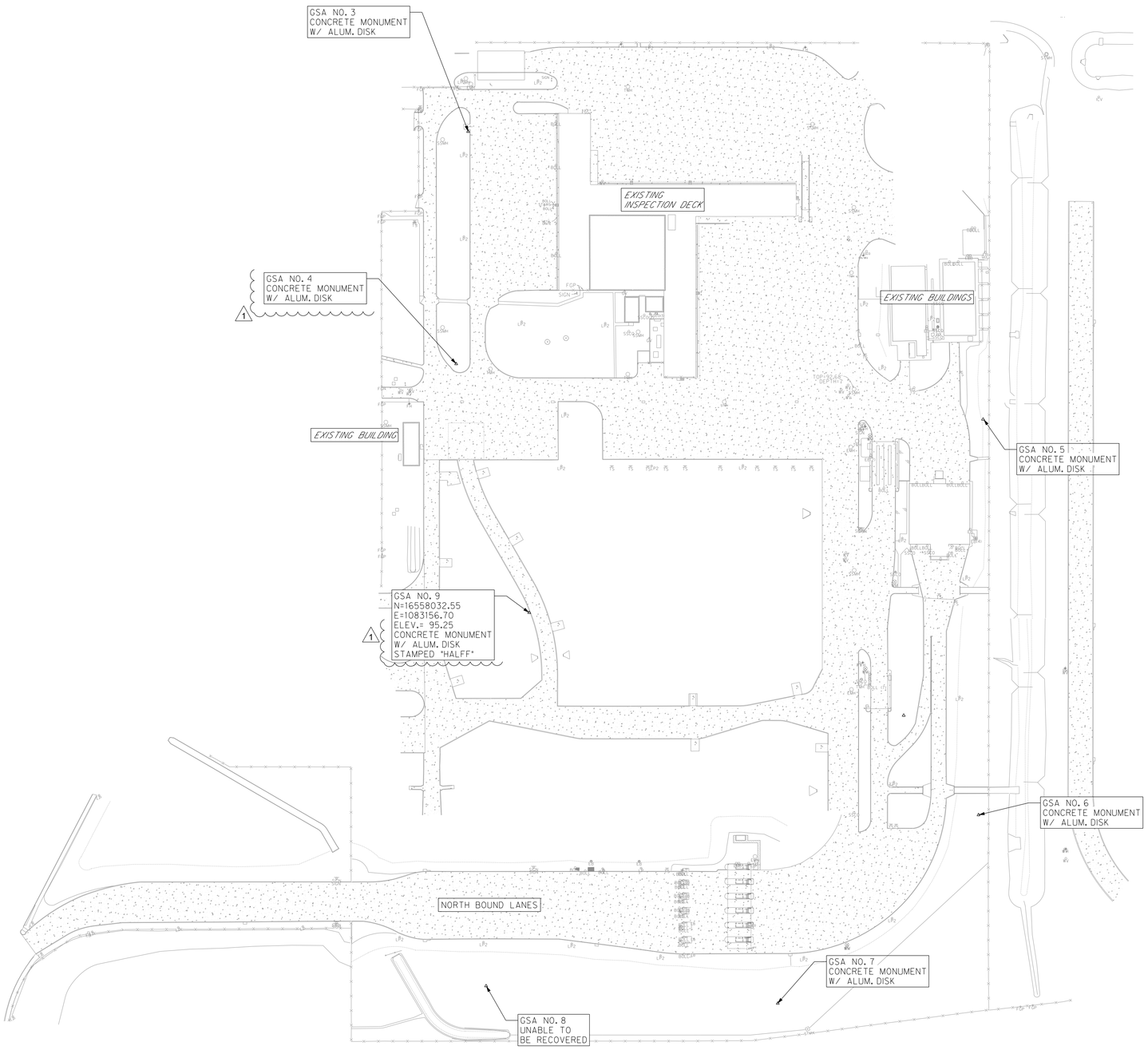

HORIZONTAL/ VERTICAL CONTROL INDEX SHEET

N

0 50 100 150 200

SCALE: 1"=100'

halff

November 13, 2024
57325.002

ASI 001

Pharr FY16 DAP - Agricultural Lab, Dock Expansion I & II
City of Pharr
GSA & CBP
TxDOT

This Modification shall be considered part of the Bidding/Construction Documents and is issued to change, amplify, add to, delete from, or otherwise explain the plans and specifications. Where provisions of this Modification differ from those of the original Bidding/Construction Documents, this Modification shall take precedence over the original plans and specifications and shall govern.

CONSTRUCTION DOCUMENT SHEETS

C-007
- Reduction in quantity for Item 496 6152 – REMOV STR (GAS MAIN) from 1222 Linear Feet to 620 Linear Feet.
- Addition of quantity for item 7401 6006 – GAS PIPE 2" DIA. From 1409 Linear Feet to 1444 Linear Feet.

C-009
- Reduction in quantity for Item 496 6152 – REMOV STR (GAS MAIN) from 1222 Linear Feet to 620 Linear Feet.
- Addition of quantity for item 7401 6006 – GAS PIPE 2" DIA. From 1409 Linear Feet to 1444 Linear Feet.

C-012
- Existing gas line servicing the DAP FY 15 Generators are represented on the sheet as an approximate location.
- Removal of "existing" natural gas line (north and south segment, from Prime Canopy to north bend) linework and callout, this line was removed during a previous project's construction activity.
- Reduction in quantity for Item 496 6152 – REMOV STR (GAS MAIN) from 1222 Linear Feet to 620 Linear Feet.

C-202
- Reestablished the control point: GSA NO. 4 Concrete monument w/ alum. Disk to a nearby location.
- Establish a new control point: GSA NO. 9 Concrete monument w/ alum. Disk stamped "HALFF".

C-203
- Reestablished the control point: GSA NO. 4 Concrete monument w/ alum. Disk to a nearby location.

C-401
- Realignment for the proposed Natural Gas Line to maintain service to DAP FY 15 Generators.

C-402
- Decrease of quantity for item 7401 6006 – GAS PIPE 2" DIA. From 354 Linear Feet to 309 Linear Feet.

ISSUED FOR CONSTRUCTION

STATE OF TEXAS
ROBERT L. SAENZ
82072
REGISTERED PROFESSIONAL ENGINEER
5-15-2024

Pharr
CITY OF PHARR, TEXAS

GSA
GENERAL SERVICES ADMINISTRATION
819 TAYLOR STREET
FORT WORTH, TEXAS 76102-6195
817-978-3334
www.gsa.gov

©2018
TEXAS DEPARTMENT OF TRANSPORTATION

halff
5000 WEST MILITARY, SUITE 100, McALLEN, TEXAS 78503
TEL (956) 664-0286 FAX (956) 664-0282 TBPE FIRM #F-312

STATE OF TEXAS
SOLVEIG A. KLASSEN
147784
LICENSED
PROFESSIONAL ENGINEER
11/13/2024

PHARR FY16 DAP - IMPORT DOCK AND AG LAB IMPROVEMENTS

HORIZONTAL/ VERTICAL CONTROL INDEX SHEET

REVISION LOG		
NO.	DATE	DESCRIPTION
1	11/13/2024	ASI 001

SCALE: AS NOTED

DN:
CK DN:
DW: IE
CK DW: RD
TR:
CK TR:

SHEET 1 OF 1

CONT	SECT	JOB	HIGHWAY
921	02	424,425,433	PHARR INT. BRIDGE
DIST	COUNTY		SHEET NO.
PHR	HIDALGO		C-202

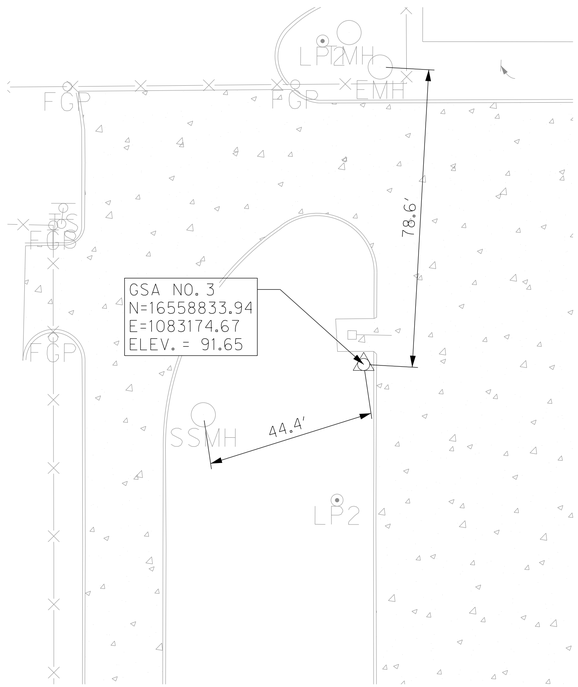

DESCRIPTION: 5/8" IRON ROD WITH ALUMINUM CAP STAMPED, "GSA 3" SET IN CONCRETE

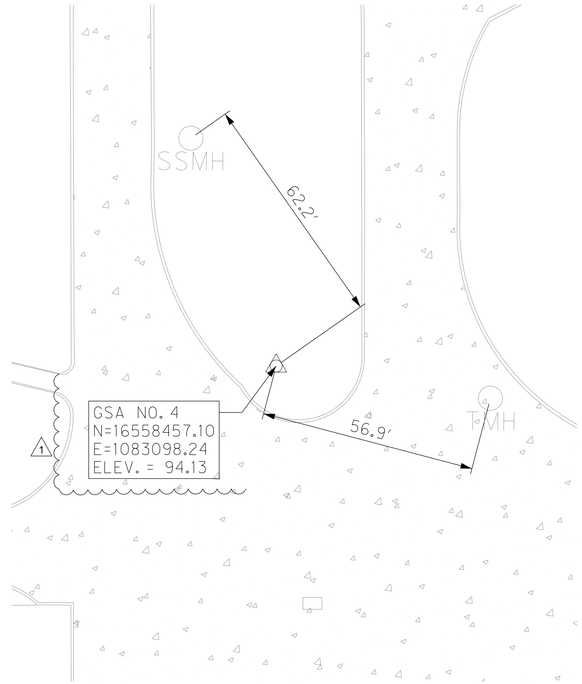

1 DESCRIPTION: 5/8" IRON ROD WITH ALUMINUM CAP STAMPED, "HALFF" SET IN CONCRETE

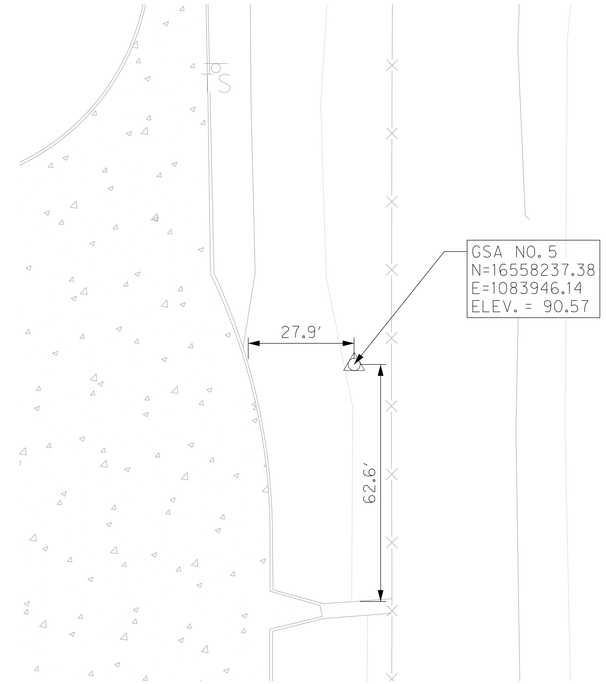

DESCRIPTION: 5/8" IRON ROD WITH ALUMINUM CAP STAMPED, "GSA 5" SET IN CONCRETE

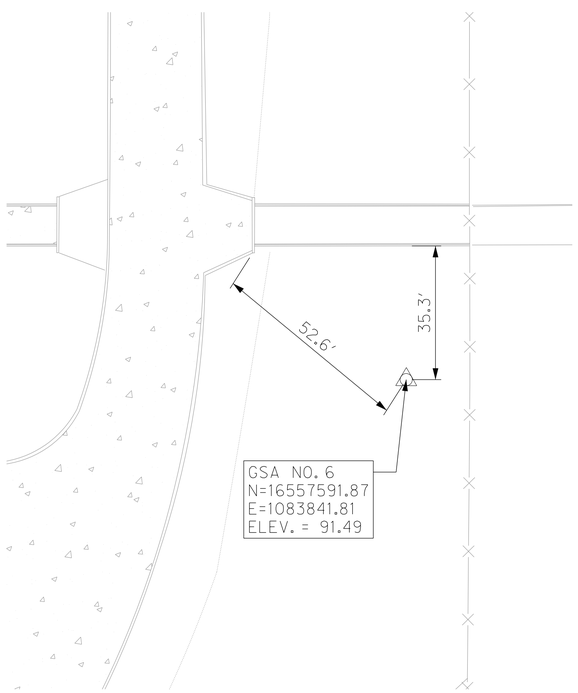

DESCRIPTION: 5/8" IRON ROD WITH ALUMINUM CAP STAMPED, "GSA 6" SET IN CONCRETE

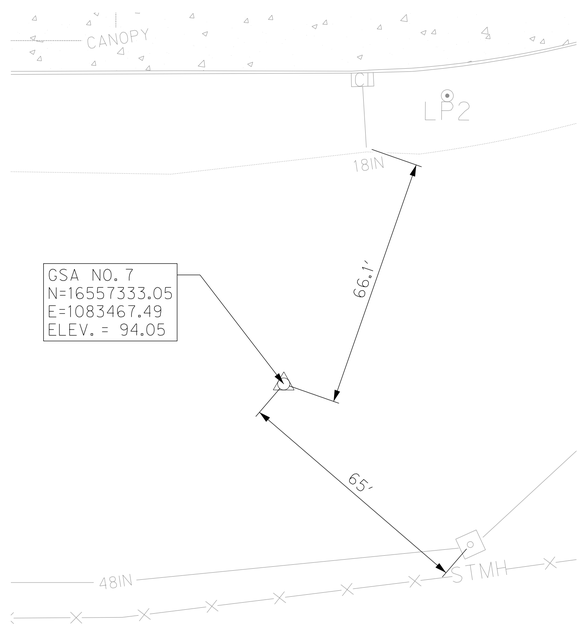

DESCRIPTION: 5/8" IRON ROD WITH ALUMINUM CAP STAMPED, "GSA 7" SET IN CONCRETE

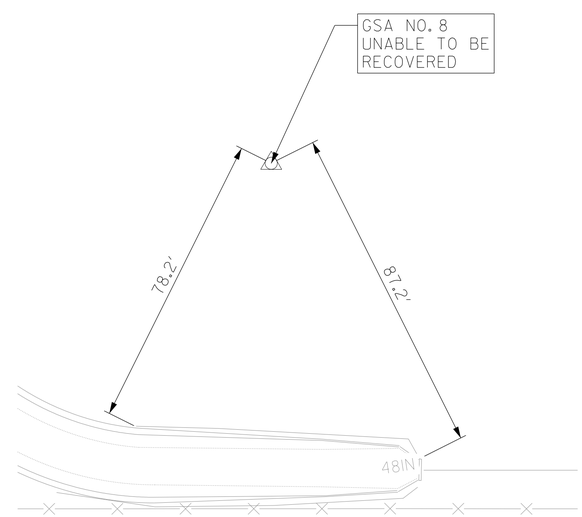

DESCRIPTION: 5/8" IRON ROD WITH ALUMINUM CAP STAMPED, "GSA 8" SET IN CONCRETE

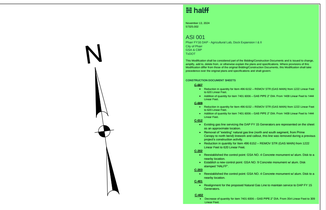

NOTES:

1. COORDINATES ARE SURFACE IN US SURVEY FEET, TO CONVERT TO GRID DIVIDE BY THE COMBINED SCALE FACTOR OF 1.00004.
2. HORIZONTAL CONTROL ARE NAD83 (2011) STATE PLANE COORDINATES, TEXAS ZONE 4205 SOUTH ZONE AND WERE DERIVED FROM ALLTERRA VRS NETWORK.
3. VERTICAL DATUM IS NAVD 88 AND BENCHMARKS WERE GPS DERIVED AND CALIBRATED USING TRIMBLE BUSINESS CENTER, SET BY KURT SCHUMACHER RPLS NO. 6333 AS PER SIGNED vPHARR BSIIF FACILITY HORIZONTAL & VERTICAL CONTROL SHEETv DATED 03-23-2015.
4. BENCHMARKS WERE RECOVERED AUGUST 2, 2021.

STATE OF TEXAS
SOLVEIG A. KLASSEN
147784
LICENSED
PROFESSIONAL ENGINEER
11/13/2024
S. Klassen

REVISION LOG		
NO.	DATE	DESCRIPTION
1	11/13/2024	ASI 001

ISSUED FOR CONSTRUCTION

STATE OF TEXAS
ROBERT L. SAENZ
82072
REGISTERED
PROFESSIONAL ENGINEER
5-13-2024

Pharr
CITY OF PHARR, TEXAS

GSA
GENERAL SERVICES ADMINISTRATION
819 TAYLOR STREET
FORT WORTH, TEXAS 76102-6195
817-978-3334
www.gsa.gov

©2018
TEXAS DEPARTMENT OF TRANSPORTATION

halff
5000 WEST MILITARY, SUITE 100, McALLEN, TEXAS 78503
TEL (956) 664-0286 FAX (956) 664-0282 TBPE FIRM #F-312

PHARR FY16 DAP - IMPORT DOCK AND AG LAB IMPROVEMENTS

HORIZONTAL/ VERTICAL CONTROL

1"=20'

SHEET 1 OF 1

DN:	CONT	SECT	JOB	HIGHWAY
CK DN:				
DW: IE	921	02	424,425,433	PHARR INT. BRIDGE
CK DW: RD	DIST		COUNTY	SHEET NO.
TR:				
CK TR:	PHR		HIDALGO	C-203

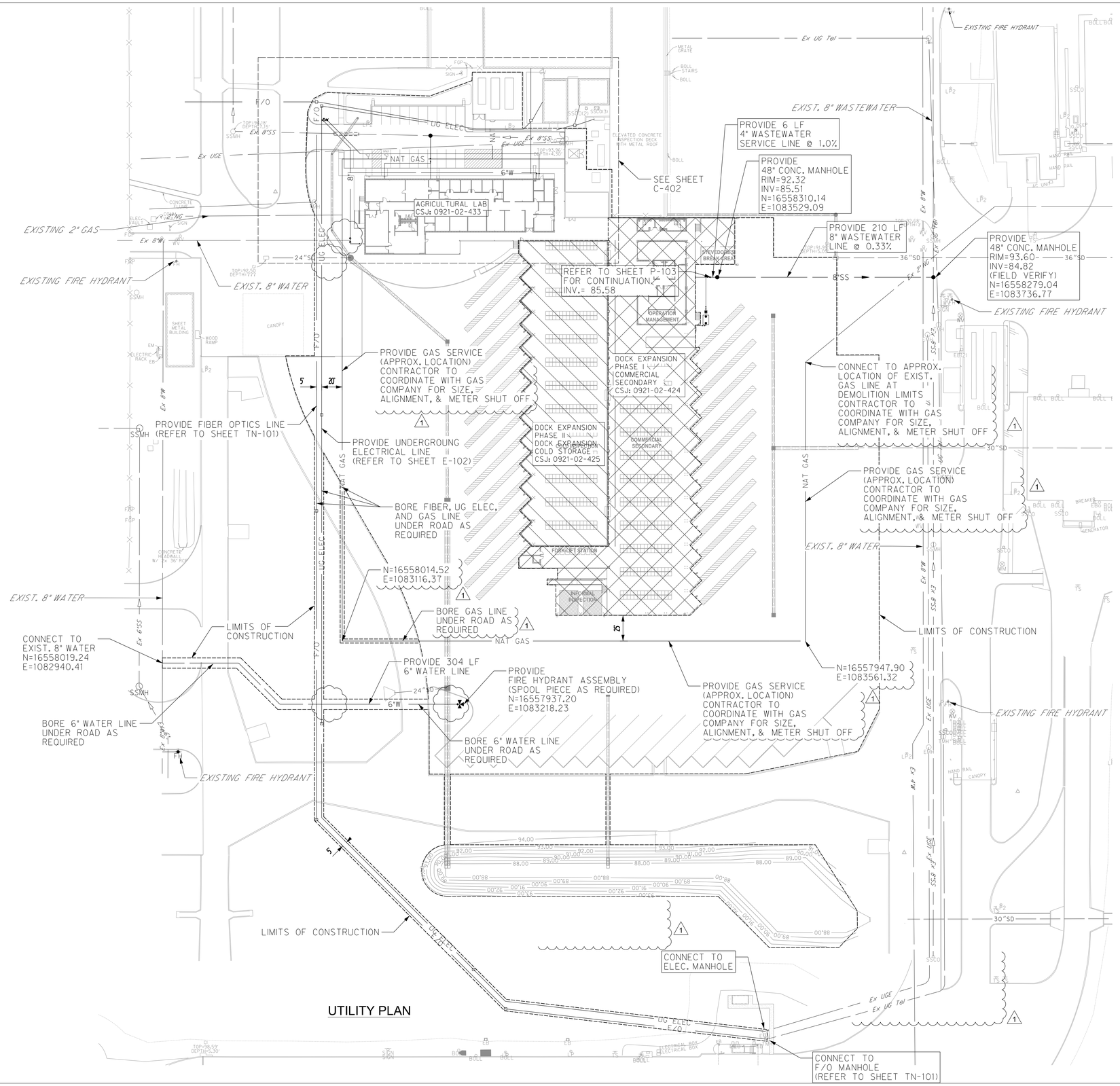

halff

November 13, 2024
9:59:00 AM

ASI 001

Pharr FY16 DAP - Agricultural Lab, Dock Expansion I & II
CSJ: 0921-02-433
GSA # CMP
TxDOT

This Modification shall be considered part of the Bidding/Construction Documents and is issued to change, amplify, add to, delete from, or otherwise explain the plans and specifications. Where provisions of this Modification and the Bidding/Construction Documents conflict, the Modification shall take precedence over the original plans and specifications and shall govern.

CONSTRUCTION DOCUMENT SHEETS

C-101
- Reduction in quantity for item 496-6152 – REMOV STR (GAS MAIN) from 1202 Linear Feet to 1000 Linear Feet.
- Addition of quantity for item 740-8006 – GAS PIPE 2" DIA. From 1400 Linear Feet to 1406 Linear Feet.

C-102
- Reduction in quantity for item 496-6152 – REMOV STR (GAS MAIN) from 1202 Linear Feet to 920 Linear Feet.
- Addition of quantity for item 740-8006 – GAS PIPE 2" DIA. From 1406 Linear Feet to 1406 Linear Feet.

C-103
- Existing gas line servicing the DAP FY 15 Generators are represented on the sheet as an approximate location.
- Removal of "welding" natural gas line (north and south segment, from Prime Contractor Staging Area to Generators and collect, this line was removed during a previous project's construction activities.
- Reduction in quantity for item 496-6152 – REMOV STR (GAS MAIN) from 1202 Linear Feet to 920 Linear Feet.

C-201
- Reestablished the control point: GSA NO. A Concrete monument w/ alum. Disk is a nearby location.

C-202
- Establish a new control point: GSA NO. 3 Concrete monument w/ alum. Disk stamped "HALFF".

C-203
- Reestablished the control point: GSA NO. A Concrete monument w/ alum. Disk is a nearby location.

C-401
- Realignment for the proposed Natural Gas Line to maintain service to DAP FY 15 Generators.

C-402
- Decrease of quantity for item 740-8006 – GAS PIPE 2" DIA. From 3ft Linear Feet to 3ft Linear Feet.

N

0 25 50 75 100

SCALE: 1"=50'

SHEET SUMMARY (CSJ: 0921-02-433)			
ITEM CODE	DESCRIPTION	UNIT	QUANTITY
7017-6004	SANITARY SEWER (6IN) (PVC)(C900)	LF	0
7017-6005	SANITARY SEWER (8IN) (PVC)(C900)	LF	210
7017-6051	MANHOLE (SANITARY SEWER) (4' DIA)	EA	2
7017-6015	SANITARY SEWER (4 IN) (PVC) (SDR 26)	LF	6
7017-6200	YARD CLEAN OUTS	EA	8
7017-6201	SAND/OIL SEPARATOR	EA	1
7112-6042	BOX, MISC VALVES, FITTINGS	LS	0
7112-6043	DOUBLE CHECK VALVE BACKFLOW ASSEMBLY	LS	0
7112-6044	VAULT, MISC VALVES, FITTINGS	LS	0
7266-6036	ENCASEMENT PIPE (16")	LF	0

SHEET SUMMARY (CSJ: 0921-02-433)			
ITEM CODE	DESCRIPTION	UNIT	QUANTITY
7112-6002	PRESSURE WATER PIPE C-900 DR-18 PVC (8")	LF	0
7112-6003	PRESSURE WATER PIPE C-900 DR-18 PVC (6")	LF	304
7112-6004	CONNECT TO EXISTING WATER LINE (8")	EA	1
7112-6011	GATE VALVE W/ BOX ASSEMBLY (8")	EA	0
7112-6015	FIRE HYDRANT, VALVE & ASSEMBLY	EA	1
7049-6373	SERVICE LINE (SHORT SIDE)(2-1/2" TO 4")	LF	0
7112-6041	COMPOUND WATER METER 2-1/2" DIA	EA	0
7112-6046	4" FDC LINE	LF	0
7112-6045	FREE STANDING FDC	EA	0

SHEET SUMMARY (CSJ: 0921-02-433)			
ITEM CODE	DESCRIPTION	UNIT	QUANTITY
7401-6006	GAS PIPE 2" DIA.	LF	1135

ISSUED FOR CONSTRUCTION

STATE OF TEXAS
ROBERT L. SAENZ
82072
REGISTERED PROFESSIONAL ENGINEER
5-13-2024

Pharr
CITY OF PHARR, TEXAS

GSA
GENERAL SERVICES ADMINISTRATION
819 TAYLOR STREET
FORT WORTH, TEXAS 76102-6195
817-978-3334
www.gsa.gov

©2018
TEXAS DEPARTMENT OF TRANSPORTATION

halff
5000 WEST MILITARY, SUITE 100, McALLEN, TEXAS 78503
TEL (956) 664-0286 FAX (956) 664-0282 TBPE FIRM #F-312

STATE OF TEXAS
SOLVEIG A. KLASSEN
147784
LICENSED PROFESSIONAL ENGINEER
11/13/2024
S. Klassen

PHARR FY16 DAP - IMPORT DOCK AND AG LAB IMPROVEMENTS

UTILITY PLAN

REVISION LOG		
NO.	DATE	DESCRIPTION
1	11/13/2024	ASI 001

SCALE: AS NOTED

SHEET 1 OF 1

DN:	CONT	SECT	JOB	HIGHWAY
CK DN:				
DW: IE	921	02	424,425,433	PHARR INT. BRIDGE
CK DW: RD	DIST		COUNTY	SHEET NO.
TR:				
CK TR:	PHR		HIDALGO	C-401

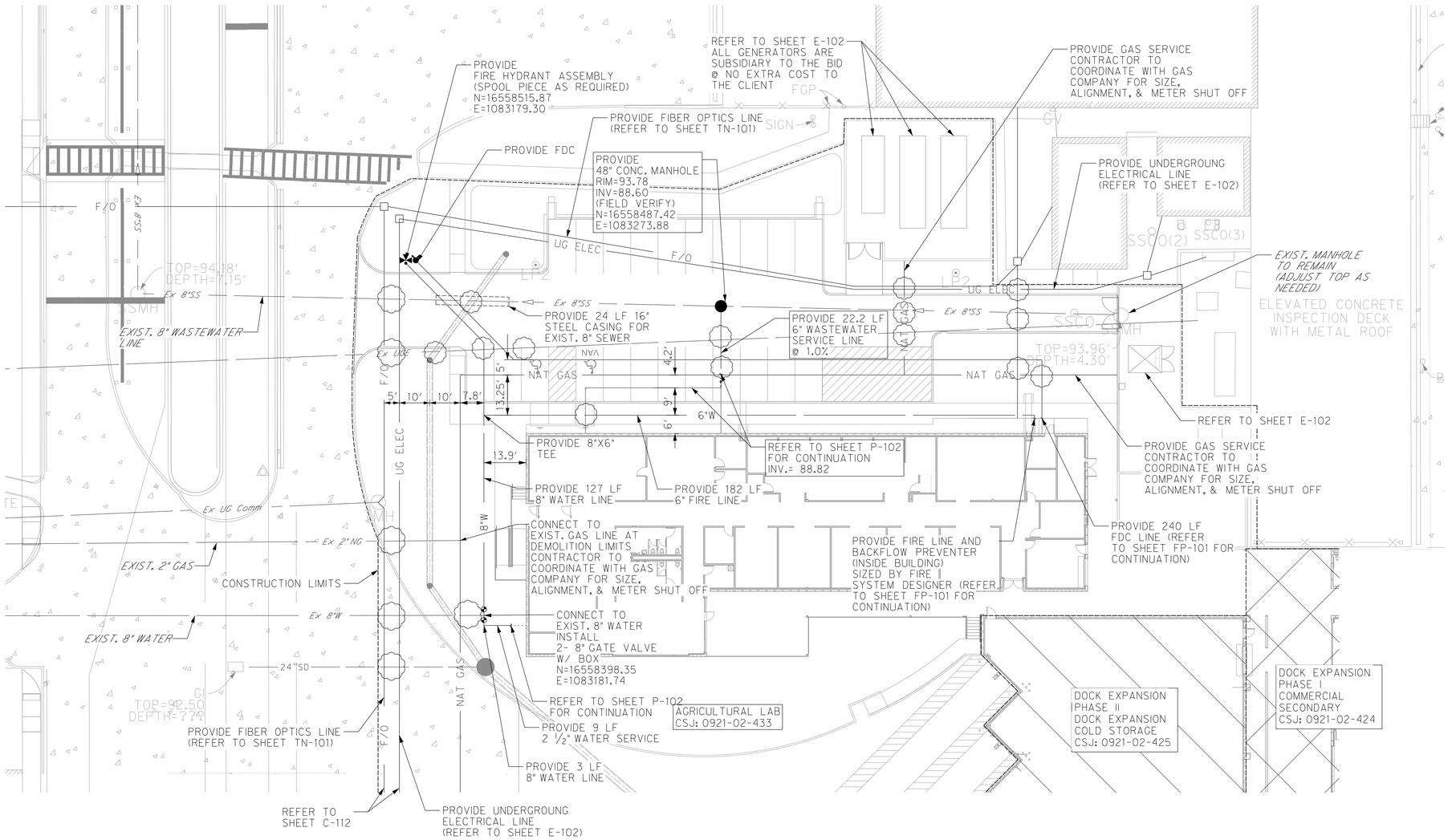

ENLARGED UTILITY PLAN

N

0 10 20 30 40

SCALE: 1"=20'

halff

November 13, 2024
9:52:00 AM

ASI 001

(Plan FY16 DAP - Agricultural Lab, Dock Expansion I & II
CSJ: 0921-02-433
CSJ & 1 DAP
TxDOT

This Modification shall be considered part of the Bidding/Construction Documents and is issued to change, amplify, and clarify the contract documents and drawings and specifications. Where provisions of this modification differ from those of the original Bidding/Construction Documents and specifications, this Modification shall take precedence over the original plans and specifications and shall govern.

CONSTRUCTION DOCUMENT SHEETS

C-102
- Reduction in quantity for item 496 6152 – REMOV STR (GAS MAIN) from 1222 Linear Feet to 1000 Linear Feet.

C-103
- Addition of quantity for item 1401 6006 – GAS PIPE 2" DIA. From 1409 Linear Feet to 1446 Linear Feet.

C-105
- Reduction in quantity for item 496 6152 – REMOV STR (GAS MAIN) from 1222 Linear Feet to 931 Linear Feet.
- Addition of quantity for item 1401 6006 – GAS PIPE 2" DIA. From 1409 Linear Feet to 1446 Linear Feet.

C-112
- Existing gas line servicing the DAP FY 15 Generators are represented on the sheet as an approximate location.
- Removal of "existing" natural gas line (north and south segment, from Prime Contractor to Generators) shown on the sheet yellow, this line was removed during a previous project's construction activity.
- Reduction in quantity for item 496 6152 – REMOV STR (GAS MAIN) from 1222 Linear Feet to 931 Linear Feet.

C-201
- Reestablished the control point: CSA NO. 4 Concrete monument w/ alum. Disk in a nearby location.
- Establish a new control point: CSA NO. 5 Concrete monument w/ alum. Disk stamped "HALFF".

C-203
- Reestablished the control point: CSA NO. 3 Concrete monument w/ alum. Disk in a nearby location.

C-402
- Realignment for the proposed Natural Gas Line to maintain service to DAP FY 15 Generators.

C-403
- Decrease of quantity for item 1401 6006 – GAS PIPE 2" DIA. From 354 Linear Feet to 309 Linear Feet.

SHEET SUMMARY (CSJ: 0921-02-433)			
ITEM CODE	DESCRIPTION	UNIT	QUANTITY
7017-6004	SANITARY SEWER (6IN) (PVC)(C900)	LF	23
7017-6005	SANITARY SEWER (8IN) (PVC)(C900)	LF	0
7017-6051	MANHOLE (SANITARY SEWER) (4' DIA)	EA	1
7017-6015	SANITARY SEWER (4 IN) (PVC) (SDR 26)	LF	0
7017-6200	YARD CLEAN OUTS	EA	0
7017-6201	SAND/OIL SEPARATOR	EA	0
7112-6042	BOX, MISC VALVES, FITTINGS	EA	1
7112-6043	DOUBLE CHECK VALVE BACKFLOW ASSEMBLY	EA	1
7112-6044	VAULT, MISC VALVES, FITTINGS	EA	1
7266-6036	ENCASEMENT PIPE (16")	LF	24

SHEET SUMMARY (CSJ: 0921-02-433)			
ITEM CODE	DESCRIPTION	UNIT	QUANTITY
7112-6002	PRESSURE WATER PIPE C-900 DR-18 PVC (8")	LF	127
7112-6003	PRESSURE WATER PIPE C-900 DR-18 PVC (6")	LF	182
7112-6004	CONNECT TO EXISTING WATER LINE (8")	EA	1
7112-6011	GATE VALVE W/ BOX ASSEMBLY (8")	EA	2
7112-6015	FIRE HYDRANT, VALVE & ASSEMBLY	EA	1
7049-6373	SERVICE LINE (SHORT SIDE)(2-1/2" TO 4")	LF	9
7112-6041	COMPOUND WATER METER 2-1/2" DIA	EA	1
7112-6046	4" FDC LINE	LF	240
7112-6045	FREE STANDING FDC	EA	1

SHEET SUMMARY (CSJ: 0921-02-433)			
ITEM CODE	DESCRIPTION	UNIT	QUANTITY
7401-6006	GAS PIPE 2" DIA.	LF	309

1

ISSUED FOR CONSTRUCTION

STATE OF TEXAS
ROBERT L. SAENZ
82072
REGISTERED PROFESSIONAL ENGINEER
5-15-2024

Pharr
CITY OF PHARR, TEXAS

GSA
GENERAL SERVICES ADMINISTRATION
819 TAYLOR STREET
FORT WORTH, TEXAS 76102-6195
817-978-3334
www.gsa.gov

©2018
TEXAS DEPARTMENT OF TRANSPORTATION

halff
5000 WEST MILITARY, SUITE 100, McALLEN, TEXAS 78503
TEL (956) 664-0286 FAX (956) 664-0282 TBPE FIRM #F-312

PHARR FY16 DAP - IMPORT DOCK AND AG LAB IMPROVEMENTS

ENLARGED UTILITY PLAN

STATE OF TEXAS
SOLVEIG A. KLASSEN
147784
LICENSED PROFESSIONAL ENGINEER
11/13/2024
S. Klassen

REVISION LOG		
NO.	DATE	DESCRIPTION
1	11/13/2024	ASI 001

SCALE: AS NOTED
DN:
CK DN:
DW: IE
CK DW: RD
TR:
CK TR:

SHEET 1 OF 1

CONT	SECT	JOB	HIGHWAY
921	02	424,425,433	PHARR INT. BRIDGE
DIST		COUNTY	SHEET NO.
PHR		HIDALGO	C-402

PCO #016

D. Wilson Construction
PO Box 3455
McAllen, Texas 78502
Phone: (956) 686-9573

Project: 24-235 - Pharr FY16 DAP-Agricultural Lab, Dock Expansion I & II
9901 S Cage Blvd
Pharr, Texas 78577

DRAFT

Prime Contract Potential Change Order #016: Omit Building Plaque

TO:	City Of Pharr PO Box 1729 Pharr, Texas 78577	**FROM:**	D Wilson Construction Company PO Box 3455 McAllen, Texas 78502
PCO NUMBER/REVISION:	016 / 0	**CONTRACT:**	24-235 - City of Pharr Dock Expansion
REQUEST RECEIVED FROM:	Rolando Ayala **(Brownstone Consultants, LLC)**	**CREATED BY:**	Pilar Anzaldua-Garza **(D Wilson Construction Company)**
STATUS:	Draft	**CREATED DATE:**	7/7/2025
REFERENCE:	RFI 40	**PRIME CONTRACT CHANGE ORDER:**	None
EXECUTED:	No	**SIGNED CHANGE ORDER RECEIVED DATE:**	
SCHEDULE IMPACT:	0 days	**TOTAL AMOUNT:**	($3,860.00)

POTENTIAL CHANGE ORDER TITLE: Omit Building Plaque

CHANGE REASON: Client Request

POTENTIAL CHANGE ORDER DESCRIPTION: *(The Contract Is Changed As Follows)*
CE #025 - Building Plaque Credit
As per RFI 40 - Building Plaque is not required.

ATTACHMENTS:

#	Budget Code	Description	Amount
1	112.10-403.M	RFI 40 - Omit Building Plaque from scope, labor and materials	$(3,860.00)
		Grand Total:	**$(3,860.00)**

Brownstone Consultants, LLC
P.O. Box 3898
McAllen, Texas 78505

07/10/2025
SIGNATURE **DATE**

City Of Pharr
PO Box 1729
Pharr, Texas 78577

7/22/2025
SIGNATURE **DATE**

D Wilson Construction Company
PO Box 3455
McAllen, Texas 78502

SIGNATURE **DATE**

CHANGE ORDER WORKSHEET

PROJECT: **24-235 Pharr FY16 DAP Ag Bldg, Cold Storage & Dock Expansion** **07/07/25**

DESCIPTION: **PCO 16 RFI 40 Building Plaque Credit**

SPEC	DESCRIPTION	SUBCONTRACTOR	QTY	UNIT	AMOUNT		EXTENSION
01-000	GENERAL CONDITIONS						
						$	-
					Subtotal	$	-
02-000	SITEWORK						
						$	-
					Subtotal	$	-
03-000	CONCRETE						
					Subtotal	$	-
04-000	MASONRY						
					Subtotal	$	-
05-000	STRUCTURAL STEEL						
					Subtotal	$	-
06-000	CARPENTRY & MILLWORK						
					Subtotal	$	-
07-000	MOISTURE PROTECTION						
					Subtotal	$	-
08-000	DOORS & WINDOWS						
					Subtotal	$	-
09-000	FINISHES						
					Subtotal	$	-
10-000	SPECIALTIES						
10-403	Omit Building Plaque	REFCO	-1	ea	3860		($3,860.00)
					Subtotal	$	(3,860.00)
15-000	HVAC & PLUMBING						
					Subtotal	$	-
16-000	Electrical						
					Subtotal	$	-
					Combined Cost	$	(3,860.00)

Comments / Clarifications:
RFI 40 Response - Per the City of Pharr, no building plaque will be installed or required for this project.

Cost	($3,860.00)
Change Proposal Total	($3,860.00)

D. Wilson Construction
PO Box 3455
McAllen, Texas 78502
P: (956) 686-9573

Project: 24-235 Pharr FY16 DAP-Agricultural Lab, Dock Expansion I & II
9901 S Cage Blvd
Pharr, Texas 78577

Email - Building Plaque #40: Building Plaque

Subject:	**24-235 Pharr DAP - RFI #40: Building Plaque**	**Sent: Jun 24, 2025 04:53 PM CDT**

From Emiliano Larios (D Wilson Construction Company)

To AJ Saldana, Adrian Aguilar, Alex Saldana, Alma Bazarte, Brandon Sligar, Brian Aguilar, Buster Smith, Carlos Coronado, Christian Quiroz, Claudette Minor, Clemente Cruz, Cliff Carnahan, David Navarro, Debbie Graham, Deborah Ochoa, Dennis Covert, Dickie Friedrichs, Dustin Kitchen, Edgar Perez, Eduardo Gonzalez, Elizabeth Garcia, Eloy Salazar, Erasmo Escamilla, Estanislado Mireles, Frank Anzaldua, Gene Espinoza, Gene Espinoza, Hector Noyola, Jacob M, Janete Castillo, Jerry Ring, Joanna Colunga, Jose Manuel Saenz, Jose Tovar, Juan Leon, Julio Monroy, Karla Garza, Kyle Hunter, Laura Alvarez, Leo Rodriguez, Leo Vela, Lisa Ring, Lucy Navarro, Luis Lucio, Luis Martinez, Luis Rodea, Marco Minor, Mike Kehner, Moises Benitez, Nelda Guerrero, Nick Gonzalez, Norman Munoz, Pedro Aguilar, Ray Gonzales, Robert Arevalo, Roger Gonzales, Rolando Leal, Rosalia Villegas, Scarlett Olivares Chapa, Tamie Bocanegra, Tavo Tenorio, Tim Hudson, Trent Hausenfluck, Vanessa Garcia, Vicente Garza

Cc Arturo Perez, Claudio Velasco, Emiliano Larios, Joe Pequeno, Pilar Anzaldua-Garza, Roberto Villela, Vanessa Garza

Attachments 24-235 Pharr DAP RFI 040 - Building Plaque RESP 6-24-25.pdf

Message Good Afternoon Team:

Attached is the response to **RFI #40: Building Plaque** for **24-235 Pharr FY16 DAP**. While this response may not impact your scope of work, it is being distributed to all subcontractors to ensure awareness of any clarifications or potential changes. It remains the subcontractor's responsibility to thoroughly review the document and determine if modifications affect their scope of work.

If this document impacts your scope, please provide your proposal for the specified scope as soon as possible. Subcontractors shall submit any cost impacts and additional days required due to this document if it affects the project schedule or their scope of work. Any revisions resulting from this document will be considered at NO COST and NO DELAY to the project if the subcontractor does not respond within **five (5) working days** of receipt. No work related to this document shall proceed until any additional cost and time are formally approved.

Emiliano Larios
Assistant Project Manager
Office: (956) 686-9573
Email: EmilianoL@DWilsonConstruction.com
Web: www.dwilsonconstruction.com
Address: P.O. Box 3455, McAllen, TX 78502-3455

D. Wilson Construction
PO Box 3455
McAllen, Texas 78502
P: (956) 686-9573

Project: 24-235 Pharr FY16 DAP-Agricultural Lab, Dock Expansion I & II
9901 S Cage Blvd
Pharr, Texas 78577

RFI #40: Building Plaque

Status	Closed on 06/24/25		
To	David Chacon (Brownstone Consultants, LLC) Rolando Ayala (Brownstone Consultants, LLC) Sabrina Alvarez (Brownstone Consultants, LLC)	**From**	Vicki Delgado (REFCO - R.E. Friedrichs Company) PO Box 4079 McAllen, Texas 78502
Date Initiated	Mar 14, 2025	**Due Date**	Mar 21, 2025
Location		**Project Stage**	Course of Construction
Cost Impact		**Schedule Impact**	
Spec Section	10 14 16 - Plaques	**Cost Code**	
Drawing Number		**Reference**	
Linked Drawings			
Received From	Dickie Friedrichs (REFCO - R.E. Friedrichs Company)	**Sub Job**	
Copies To	Pilar Anzaldua-Garza (D Wilson Construction Company), Vanessa Garza (D Wilson Construction Company), Emiliano Larios (D Wilson Construction Company), Sabas Lopez (D Wilson Construction Company), Joe Pequeno (D Wilson Construction Company), Arturo Perez (D Wilson Construction Company), Claudio Velasco (D Wilson Construction Company), Roberto Villela (D Wilson Construction Company)		

Activity

Question

Question from Vicki Delgado REFCO - R.E. Friedrichs Company *on Wednesday, Mar 5, 2025 at 10:50 AM CST*

After further review of the drawings, we do not see where a plaque is specified to be installed. While there is a specification for a plaque, it is not referenced on the plans, and the specifications do not indicate a required size. Provide clarification on the intended location, size, and any additional details regarding the plaque.

Please provide marked-up drawing sheets for any changes to ensure clarity and accurate documentation.

Attachments
RFI 40 - Building Plaque.pdf

Official Response

Response from Emiliano Larios D Wilson Construction Company *on Tuesday, Jun 24, 2025 at 04:48 PM CDT*

Response from Benjamin A. Luna on 6/24/2025:

Per the City of Pharr's direction, no building plaque will be installed or required for this project.

Attachments
RFI #40 - Building Plaque - Response.pdf

halff

Request for Information Response

To:	D. Wilson Construction Attn. Shukan Bhakta, APM 1207 E Pecan Blvd, McAllen, TX 78501	**Date:**	6/24/2025		
From:	Benjamin A. Luna, PE	**AVO:**	57325.002	**RFI No.:**	40
Email:	bluna@halff.com	**Project:**	Pharr FY 16 DAP – Agricultural Lab, Dock Expansion I & II		
Subject:	Building Plaque				

☐ Letter dated:

☒ Email dated: 3/14/2025

☐ Phone call dated:

This confirms and records a request for information. Unless notified in writing within three days of date noted above, it is agreed that a response generated from the request shall be provided to this office within five days.

REQUEST

After further review of the drawings, we do not see where a plaque is specified to be installed. While there is a specification for a plaque, it is not referenced on the plans, and the specifications do not indicate a required size. Provide clarification on the intended location, size, and any additional details regarding the plaque.

Please provide marked-up drawing sheets for any changes to ensure clarity and accurate documentation.

ANSWER

Per the City of Pharr's direction, no building plaque will be installed or required for this project.

Answered by: Benjamin A. Luna

COPIES: ☐ File ☒ Owner ☒ Owner ☐ Other

Attachments: Original RFI Document Provided by Brownstone.

RFI detail

#40 Building Plaque

Status	**Open** In Review
Created on	Mar 14, 2025 by **Sabrina Alvarez** (Brownstone Consultants)
RFI type	Default RFI workflow
Ball in court	**Rolando Ayala**
Due date	-

Question

-

References and Attachments

Files (1)

- 40 -Item - Building Plaque.pdf

Impact

Cost impact	-
Schedule impact	-

Other attributes

Priority	Normal
Discipline	-
Category	-
Location	-
Location details	-

External id	-
Co-reviewer(s)	

Activities	By	At
Sabrina Alvarez changed title to: *Building Plaque*	**Sabrina Alvarez**	Mar 14, 2025, 4:05 PM CDT
Sabrina Alvarez added a reference to a File **40 -Item - Building Plaque.pdf**	**Sabrina Alvarez**	Mar 14, 2025, 4:02 PM CDT
Sabrina Alvarez (Brownstone Consultants) created this RFI in **Open** In Review status and set Ball in court to **Rolando Ayala**.	**Sabrina Alvarez**	Mar 14, 2025, 4:02 PM CDT

D. Wilson Construction
PO Box 3455
McAllen, Texas 78502
P: (956) 686-9573

Project: 24-235 Pharr FY16 DAP - Agricultural Lab, Dock Expansion I & II
9901 S Cage Blvd
Pharr, Texas 78577

RFI #40: Building Plaque

Status	Open		
To	Sabrina Alvarez (Brownstone Consultants, LLC) Rolando Ayala (Brownstone Consultants, LLC) David Chacon (Brownstone Consultants, LLC)	**From**	Vicki Delgado (REFCO - R.E. Friedrichs Company) PO Box 4079 McAllen, Texas 78502
Date Initiated	Mar 14, 2025	**Due Date**	Mar 21, 2025
Location		**Project Stage**	Course of Construction
Cost Impact		**Schedule Impact**	
Spec Section	10 14 16 - Plaques	**Cost Code**	
Drawing Number		**Reference**	
Linked Drawings			
Received From	Dickie Friedrichs (REFCO - R.E. Friedrichs Company)	**Sub Job**	
Copies To	Pilar Anzaldua-Garza (D Wilson Construction Company), Vanessa Garza (D Wilson Construction Company), Emiliano Larios (D Wilson Construction Company), Sabas Lopez (D Wilson Construction Company), Joe Pequeno (D Wilson Construction Company), Arturo Perez (D Wilson Construction Company), Claudio Velasco (D Wilson Construction Company), Roberto Villela (D Wilson Construction Company)		

Activity

Question

Question from Vicki Delgado REFCO - R.E. Friedrichs Company *on Wednesday, Mar 5, 2025 at 10:50 AM CST*

After further review of the drawings, we do not see where a plaque is specified to be installed. While there is a specification for a plaque, it is not referenced on the plans, and the specifications do not indicate a required size. Provide clarification on the intended location, size, and any additional details regarding the plaque.

Please provide marked-up drawing sheets for any changes to ensure clarity and accurate documentation.

Attachments
RFI 40 - Building Plaque.pdf

Awaiting an Official Response

Estimating

From: Estimating
Sent: Tuesday, December 17, 2024 10:52 AM
To: ROBERTOV@DWILSONCONSTRUCTION.COM
Cc: vanessag@dwilsonconstruction.com
Subject: Pharr FY16 DAP - Ag Lab, Dock Expansion I / section 101416 Dedicatory Building Plaque

Howdy!
Please advise what size the dedicatory building plaque for this project needs to be and advise back.
Thank you!

www.REFCO.ws
Dickie Friedrichs
PO Box 4079 McAllen, Texas 78502
3409 S. Jackson Rd. Pharr, Texas 78577
T956 687 8261
F956 687 6164

Home of the Door Doctor!

SECTION 101416 - PLAQUES

PART 1 - GENERAL

1.1 SUMMARY

A. Section includes metal plaques.

1.2 ACTION SUBMITTALS

A. Product Data: For each type of product.

B. Shop Drawings: For plaques.

1. Include fabrication and installation details and attachments to other work.
2. Show plaque mounting heights, locations of supplementary supports to be provided by other installers, and accessories.
3. Show message list, typestyles, graphic elements, including raised characters and Braille, and layout for each plaque full.

C. Samples: For each exposed product and for each color and texture specified.

1.3 INFORMATIONAL SUBMITTALS

A. Sample warranty.

1.4 CLOSEOUT SUBMITTALS

A. Maintenance data.

1.5 WARRANTY

A. Special Warranty: Manufacturer agrees to repair or replace components of plaques that fail in materials or workmanship within specified warranty period.

1. Warranty Period: Five years from date of Substantial Completion.

SENSITIVE BUT UNCLASSIFIED (SBU) PROPERTY OF THE UNITED STATES GOVERNMENT.
FOR OFFICIAL USE ONLY.
Do not remove this notice. Properly destroy documents when no longer needed.

PART 2 - PRODUCTS

2.1 PERFORMANCE REQUIREMENTS

A. Accessibility Standard: Comply with applicable provisions in the USDOJ's "2010 ADA Standards for Accessible Design", the ABA standards of the Federal agency having jurisdiction, and ICC A117.1.

2.2 PLAQUES

A. Cast Plaque: Cast-metal plaque with background texture, border, and characters having uniform faces, sharp corners, and precisely formed lines and profiles; and as follows:

1. Manufacturers: Subject to compliance with requirements, available manufacturers offering products that may be incorporated into the Work include, but are not limited to the following:

   a. A.R.K. Ramos.
   b. ASI Sign Systems, Inc.
   c. Gemini Incorporated.
   d. Metal Arts.
   e. Southwell Company (The).

2. Plaque Material: Cast aluminum.
3. Plaque Thickness: 0.50 inch (12.7 mm).
4. Finishes:

   a. Integral Metal Finish: Mill finish raised surfaces and text with dark baked enamel or powder-coated background.
   b. Baked-Enamel or Powder-Coat Background Finish: Manufacturer's standard, in color as selected by Architect from manufacturer's full range.
   c. Overcoat: Manufacturer's standard baked-on clear coating.

5. Background Texture: Leatherette.
6. Integrally Cast Border Style: Raised flat band.
7. Mounting: Concealed studs.

2.3 ACCESSORIES

A. Fasteners and Anchors: Manufacturer's standard as required for secure anchorage of plaques, noncorrosive and compatible with each material joined, and complying with the following:

1. Use concealed fasteners and anchors unless indicated to be exposed.
2. Furnish stainless-steel devices unless otherwise indicated.

SENSITIVE BUT UNCLASSIFIED (SBU) PROPERTY OF THE UNITED STATES GOVERNMENT.
FOR OFFICIAL USE ONLY.
Do not remove this notice. Properly destroy documents when no longer needed.

B. Bituminous Paint: Cold-applied asphalt emulsion complying with ASTM D1187/D1187M.

2.4 FABRICATION

A. General: Provide manufacturer's standard plaques according to requirements indicated.

1. Provide rabbets, lugs, and tabs necessary to attach to existing work. Drill and tap for required fasteners. Use concealed fasteners.
2. Castings: Fabricate castings free of warp, cracks, blowholes, pits, scale, sand holes, and other defects that impair appearance or strength. Grind, wire brush, sandblast, and buff castings to remove seams, gate marks, casting flash, and other casting marks before finishing.

PART 3 - EXECUTION

3.1 INSTALLATION

A. General: Install plaques using mounting methods indicated and according to manufacturer's written instructions.

1. Install plaques level, plumb, true to line, and at locations and heights indicated, with plaque surfaces free of distortion and other defects in appearance.
2. Install plaques so they do not protrude or obstruct according to the accessibility standard.
3. Before installation, verify that plaque surfaces are clean and free of materials or debris that would impair installation.
4. Corrosion Protection: Coat concealed surfaces of exterior aluminum in contact with grout, concrete, masonry, wood, or dissimilar metals, with a heavy coat of bituminous paint.

B. Mounting Methods:

1. Concealed Studs: Using a template, drill holes in substrate aligning with studs on back of plaque. Remove loose debris from hole and substrate surface.

a. Masonry Substrates: Fill holes with adhesive. Leave recess space in hole for displaced adhesive. Place plaque in position and push until flush to surface, embedding studs in holes. Temporarily support plaque in position until adhesive fully sets.
b. Thin or Hollow Surfaces: Place plaque in position and flush to surface, install washers and nuts on studs projecting through opposite side of surface, and tighten.

C. Remove temporary protective coverings and strippable films as plaques are installed.

SENSITIVE BUT UNCLASSIFIED (SBU) PROPERTY OF THE UNITED STATES GOVERNMENT.
FOR OFFICIAL USE ONLY.
Do not remove this notice. Properly destroy documents when no longer needed.

D. Wilson Construction
PO Box 3455
McAllen, Texas 78502
P: (956) 686-9573

Project: 24-235 Pharr FY16 DAP - Agricultural Lab, Dock Expansion I & II
9901 S Cage Blvd
Pharr, Texas 78577

RFI #40: Building Plaque

Status	Open		
To	Sabrina Alvarez (Brownstone Consultants, LLC) Rolando Ayala (Brownstone Consultants, LLC) David Chacon (Brownstone Consultants, LLC)	**From**	Vicki Delgado (REFCO - R.E. Friedrichs Company) PO Box 4079 McAllen, Texas 78502
Date Initiated	Mar 14, 2025	**Due Date**	Mar 21, 2025
Location		**Project Stage**	Course of Construction
Cost Impact		**Schedule Impact**	
Spec Section	10 14 16 - Plaques	**Cost Code**	
Drawing Number		**Reference**	
Linked Drawings			
Received From	Dickie Friedrichs (REFCO - R.E. Friedrichs Company)	**Sub Job**	
Copies To	Pilar Anzaldua-Garza (D Wilson Construction Company), Vanessa Garza (D Wilson Construction Company), Emiliano Larios (D Wilson Construction Company), Sabas Lopez (D Wilson Construction Company), Joe Pequeno (D Wilson Construction Company), Arturo Perez (D Wilson Construction Company), Claudio Velasco (D Wilson Construction Company), Roberto Villela (D Wilson Construction Company)		

Activity

Question

Question from Vicki Delgado REFCO - R.E. Friedrichs Company *on Wednesday, Mar 5, 2025 at 10:50 AM CST*

After further review of the drawings, we do not see where a plaque is specified to be installed. While there is a specification for a plaque, it is not referenced on the plans, and the specifications do not indicate a required size. Provide clarification on the intended location, size, and any additional details regarding the plaque.

Please provide marked-up drawing sheets for any changes to ensure clarity and accurate documentation.

Attachments
RFI 40 - Building Plaque.pdf

Awaiting an Official Response

Estimating

From: Estimating
Sent: Tuesday, December 17, 2024 10:52 AM
To: ROBERTOV@DWILSONCONSTRUCTION.COM
Cc: vanessag@dwilsonconstruction.com
Subject: Pharr FY16 DAP - Ag Lab, Dock Expansion I / section 101416 Dedicatory Building Plaque

Howdy!
Please advise what size the dedicatory building plaque for this project needs to be and advise back.
Thank you!

www.REFCO.ws
Dickie Friedrichs
PO Box 4079 McAllen, Texas 78502
3409 S. Jackson Rd. Pharr, Texas 78577
T956 687 8261
F956 687 6164

Home of the Door Doctor!

SECTION 101416 - PLAQUES

PART 1 - GENERAL

1.1 SUMMARY

A. Section includes metal plaques.

1.2 ACTION SUBMITTALS

A. Product Data: For each type of product.

B. Shop Drawings: For plaques.

1. Include fabrication and installation details and attachments to other work.
2. Show plaque mounting heights, locations of supplementary supports to be provided by other installers, and accessories.
3. Show message list, typestyles, graphic elements, including raised characters and Braille, and layout for each plaque full.

C. Samples: For each exposed product and for each color and texture specified.

1.3 INFORMATIONAL SUBMITTALS

A. Sample warranty.

1.4 CLOSEOUT SUBMITTALS

A. Maintenance data.

1.5 WARRANTY

A. Special Warranty: Manufacturer agrees to repair or replace components of plaques that fail in materials or workmanship within specified warranty period.

1. Warranty Period: Five years from date of Substantial Completion.

SENSITIVE BUT UNCLASSIFIED (SBU) PROPERTY OF THE UNITED STATES GOVERNMENT.
FOR OFFICIAL USE ONLY.
Do not remove this notice. Properly destroy documents when no longer needed.

PART 2 - PRODUCTS

2.1 PERFORMANCE REQUIREMENTS

A. Accessibility Standard: Comply with applicable provisions in the USDOJ's "2010 ADA Standards for Accessible Design", the ABA standards of the Federal agency having jurisdiction, and ICC A117.1.

2.2 PLAQUES

A. Cast Plaque: Cast-metal plaque with background texture, border, and characters having uniform faces, sharp corners, and precisely formed lines and profiles; and as follows:

1. Manufacturers: Subject to compliance with requirements, available manufacturers offering products that may be incorporated into the Work include, but are not limited to the following:

   a. A.R.K. Ramos.
   b. ASI Sign Systems, Inc.
   c. Gemini Incorporated.
   d. Metal Arts.
   e. Southwell Company (The).

2. Plaque Material: Cast aluminum.
3. Plaque Thickness: 0.50 inch (12.7 mm).
4. Finishes:

   a. Integral Metal Finish: Mill finish raised surfaces and text with dark baked enamel or powder-coated background.
   b. Baked-Enamel or Powder-Coat Background Finish: Manufacturer's standard, in color as selected by Architect from manufacturer's full range.
   c. Overcoat: Manufacturer's standard baked-on clear coating.

5. Background Texture: Leatherette.
6. Integrally Cast Border Style: Raised flat band.
7. Mounting: Concealed studs.

2.3 ACCESSORIES

A. Fasteners and Anchors: Manufacturer's standard as required for secure anchorage of plaques, noncorrosive and compatible with each material joined, and complying with the following:

1. Use concealed fasteners and anchors unless indicated to be exposed.
2. Furnish stainless-steel devices unless otherwise indicated.

SENSITIVE BUT UNCLASSIFIED (SBU) PROPERTY OF THE UNITED STATES GOVERNMENT.
FOR OFFICIAL USE ONLY.
Do not remove this notice. Properly destroy documents when no longer needed.

B. Bituminous Paint: Cold-applied asphalt emulsion complying with ASTM D1187/D1187M.

2.4 FABRICATION

A. General: Provide manufacturer's standard plaques according to requirements indicated.

1. Provide rabbets, lugs, and tabs necessary to attach to existing work. Drill and tap for required fasteners. Use concealed fasteners.
2. Castings: Fabricate castings free of warp, cracks, blowholes, pits, scale, sand holes, and other defects that impair appearance or strength. Grind, wire brush, sandblast, and buff castings to remove seams, gate marks, casting flash, and other casting marks before finishing.

PART 3 - EXECUTION

3.1 INSTALLATION

A. General: Install plaques using mounting methods indicated and according to manufacturer's written instructions.

1. Install plaques level, plumb, true to line, and at locations and heights indicated, with plaque surfaces free of distortion and other defects in appearance.
2. Install plaques so they do not protrude or obstruct according to the accessibility standard.
3. Before installation, verify that plaque surfaces are clean and free of materials or debris that would impair installation.
4. Corrosion Protection: Coat concealed surfaces of exterior aluminum in contact with grout, concrete, masonry, wood, or dissimilar metals, with a heavy coat of bituminous paint.

B. Mounting Methods:

1. Concealed Studs: Using a template, drill holes in substrate aligning with studs on back of plaque. Remove loose debris from hole and substrate surface.

a. Masonry Substrates: Fill holes with adhesive. Leave recess space in hole for displaced adhesive. Place plaque in position and push until flush to surface, embedding studs in holes. Temporarily support plaque in position until adhesive fully sets.
b. Thin or Hollow Surfaces: Place plaque in position and flush to surface, install washers and nuts on studs projecting through opposite side of surface, and tighten.

C. Remove temporary protective coverings and strippable films as plaques are installed.

SENSITIVE BUT UNCLASSIFIED (SBU) PROPERTY OF THE UNITED STATES GOVERNMENT.
FOR OFFICIAL USE ONLY.
Do not remove this notice. Properly destroy documents when no longer needed.

PCO #017

D. Wilson Construction
PO Box 3455
McAllen, Texas 78502
Phone: (956) 686-9573

Project: 24-235 - Pharr FY16 DAP-Agricultural Lab, Dock Expansion I & II
9901 S Cage Blvd
Pharr, Texas 78577

DRAFT

Prime Contract Potential Change Order #017: CE #026 - RFI 75 - Commercial Dock 102 Slope

TO:	City Of Pharr PO Box 1729 Pharr, Texas 78577	**FROM:**	D Wilson Construction Company PO Box 3455 McAllen, Texas 78502
PCO NUMBER/REVISION:	017 / 0	**CONTRACT:**	24-235 - City of Pharr Dock Expansion
REQUEST RECEIVED FROM:	Rolando Ayala **(Brownstone Consultants, LLC)**	**CREATED BY:**	Pilar Anzaldua-Garza **(D Wilson Construction Company)**
STATUS:	Draft	**CREATED DATE:**	7/14/2025
REFERENCE:	RFI 75	**PRIME CONTRACT CHANGE ORDER:**	None
EXECUTED:	No	**SIGNED CHANGE ORDER RECEIVED DATE:**	
SCHEDULE IMPACT:	14 days	**TOTAL AMOUNT:**	$24,278.03

POTENTIAL CHANGE ORDER TITLE: CE #026 - RFI 75 - Commercial Dock 102 Slope

CHANGE REASON: Client Request

POTENTIAL CHANGE ORDER DESCRIPTION: *(The Contract Is Changed As Follows)*

CE #026 - RFI 75 - Commercial Dock 102 Slope
Slope will be required for a portion of Room 102 (Commercial Secondary). Approximately 40 feet of the concrete dock of Room 102 (Commercial Secondary) is to be sloped downward at 1/16" towards the eastern dock edge. As a result, the dock edge would be lowered 2-1/2". This will result in the concrete pavement being lowered by 2-1/2" to maintain the required minimum dock height of 48". Please refer to the provided exhibit, which illustrates this response. An ASI will be issued with revised Civil, Architectural, and Structural drawings to memorialize this modification.

ATTACHMENTS:

RFI 75 COVER.pdf

#	Budget Code	Description	Amount
1	114.03-100.S	RFI 75 - Slope Partial Room 102 - Remove installed and cut rebar to accommodate for new slope requirement. Reinstall forms to adjusted slope as per RFI 75.	$22,893.00
		Subtotal:	**$22,893.00**
		Overhead and Profit (5.00% Includes Cost Type (20)):	$1,144.65
		Bond (1.00% Applies to All Line Items):	$240.38
		Grand Total:	**$24,278.03**

Brownstone Consultants, LLC	**City Of Pharr**	**D Wilson Construction Company**
P.O. Box 3898	PO Box 1729	PO Box 3455
McAllen, Texas 78505	Pharr, Texas 78577	McAllen, Texas 78502
07/16/2025	7/16/2025	
SIGNATURE **DATE**	**SIGNATURE** **DATE**	**SIGNATURE** **DATE**

CHANGE ORDER WORKSHEET

PROJECT: **24-235 Pharr FY16 DAP Ag Bldg, Cold Storage & Dock Expansion** **07/16/25**

DESCIPTION: **PCO 17 RFI 75 - Dock 102 Slope for drainage**

SPEC	DESCRIPTION	SUBCONTRACTOR	QTY	UNIT	AMOUNT		EXTENSION
01-000	GENERAL CONDITIONS						
						$	-
					Subtotal	$	-
02-000	SITEWORK						
						$	-
					Subtotal	$	-
03-000	CONCRETE						
	RFI 75 - Slope Partial Room 102 - Remove installed and cut rebar to accommodate for new slope requirement. Reinstall forms to adjusted slope as per RFI 75.		Refer to Breakdown Attached	LF	0	$	22,893.00
					Subtotal	$	22,893.00
04-000	MASONRY						
					Subtotal	$	-
05-000	STRUCTURAL STEEL						
					Subtotal	$	-
06-000	CARPENTRY & MILLWORK						
					Subtotal	$	-
07-000	MOISTURE PROTECTION						
					Subtotal	$	-
08-000	DOORS & WINDOWS						
					Subtotal	$	-
09-000	FINISHES						
					Subtotal	$	-
10-000	SPECIALTIES						
					Subtotal	$	-
15-000	HVAC & PLUMBING						
					Subtotal	$	-
16-000	Electrical						
					Subtotal	$	-
					Combined Cost	$	22,893.00

Comments / Clarifications:
Slope will be required for a portion of Room 102 (Commercial Secondary). Approximately 40 feet of the concrete dock of Room 102 (Commercial Secondary) is to be sloped downward at 1/16" towards the eastern dock edge. As a result, the dock edge would be lowered 2-1/2". This will result in the concrete pavement being lowered by 2-1/2" to maintain the required minimum dock height of 48". Please refer to the provided exhibit, which illustrates this response. An ASI will be issued with revised Civil, Architectural, and Structural drawings to memorialize this modification.

Cost		$22,893.00
Overhead	$	1,144.65
Bond 1%		$240.38
Change Proposal Total		$24,278.03

J. SALAZAR CONSTRUCTION INC.
956.240.8830
CONCRETE SERVICES

PROJECT : 24-235 Pharr FY16 DAP Ag Bldg, Cold Storage & Dock Expansion

PCO 17 — RFI 75 - Dock 102 Slope for drainage

	QUANTITY	UNIT	UNIT COST L	UNIT COST M	UNIT COST E	UNIT COST S	EXTENSION LABOR	EXTENSION MATERIAL	EXTENSION EQUIP	EXTENSION SUB
SUB: J Salazar Construction inc.							-	-	-	-
Labor							-	-	-	-
Foreman Salary	40	Hr	32				1,280.00	-	-	-
Operator skyttrack	40	Hr	20				800.00	-	-	-
carpenter	80	Hr	18				1,440.00	-	-	-
Laborer	80	Hr	16				1,280.00	-	-	-
rod buster (2 worker)	80	hr	18				1,440.00	-	-	-
Equipment							-	-	-	-
F-150 Pickup Truck Z (2 trucks)	60	Hr			46.17		-	-	2,770.20	-
skytrak	40	Hr			111.22		-	-	4,448.80	-
							-	-	-	-
							-	-	-	-
Material							-	-	-	-
2" x 4"x 16'spf	68	LF		6.32			-	429.76	-	-
3/4" ply form	8	EA		60			-	480.00	-	-
misc materiel	1	ls		489			-	489.00	-	-
							-	-	-	-
							-	-	-	-
							-	-	-	-
							-	-	-	-
							-	-	-	-
							-	-	-	-
							-	-	-	-
							-	-	-	-
							-	-	-	-
							-	-	-	-
Labor & Tax							-	-	-	-
Overtime Factor	0						-	-	-	-
Labor Burden (Salary)	55%		1,095.00				602.25	-	-	-
Labor Burdern (Hourly)	55%		6,240.00				3,432.00	-	-	-
Tax on Materials	0						-	-	-	-
SUB DIRECT COSTS							**10,274.25**	**1,398.76**	**7,219.00**	**-**
OVERHEAD AND PROFIT										
Compensation							-	-	-	-
Labor	25%						2,568.56	-	-	-
Material	25%						-	349.69	-	-
Equipment	15%						-	-	1,082.85	-
Subcontractors Subcontractor	5%						-	-	-	-
							-	-	-	-
SUBCONTRACTOR'S OH & Profit							**2,568.56**	**349.69**	**1,082.85**	**-**
							-	-	-	-
							-	-	-	-
							-	-	-	-
							-	-	-	-
SUBTOTALS							**12,842.81**	**1,748.45**	**8,301.85**	**-**
					TOTAL			**22,893**	**-**	**22,893.11**

Sheet No. 1 **Item:** **RFI 75 - Dock 102 Slope for drainage** **QUOTE TO GC** **22,893.00**

Industrial, Commercial www.jsconstructionrgv.com

701 Palmview Dr. 956.205.1780 O
Mission, Texas 78574 956.205.1785 F
james@jsconstructionrgv.com 956.638.8430 C

Change Order

RE: Pharr Dock Expansion Date:7/8/25

Concrete construction to include the following items:

Cost seems excessive, Re-Evaluate & Provide A Breakdown

Item	Description-Concrete construction	Qty	unit	Cost	TOTAL
	Remove installed forms and cut rebar to accommodate for new slope requirement. Reinstall forms to adjusted slope as per owner.	415	LF	$32,435.00	$32,435.00
				Total	**$32,435.00**

INCLUDES: All wood for forms, form-set, trenching, excavating beams and footings, place and tie reinforcing steel, install imbeds and anchor bolts, place and finish concrete, saw-cut control joints, and apply curing compound. Price valid for 30 days.

EXCLUDES: Concrete ready mix, reinforcing steel and equipment for slab on grade. Surveying of building corners, alternates not indicated, fill dirt, sand, asphalt, pipe bollards, anchor bolts, drilling and epoxy setting rebar dowels for block, concrete stairs or stairways, concrete bond beams or concrete columns, concrete retaining walls, grout or grouting, sealing expansion or saw-cut joints, weld plates, steel hand rails for handicap ramps, access tiles or domed brick, pavers for handicap ramps, angle iron, grates for trench drains, welding, miscellaneous steel items, void forms, treated lumber for blocking at concrete panels, sealing concrete panel joints, shoring for cast in place bond beams or slabs, specialty forms for columns, lab-testing, marking of and locating utility lines when excavating or trenching, hauling off excavated material from foundations or footings, hoisting and crane operations, striping for parking spaces, concrete parking blocks, permits, or anything else not mentioned above. Work is to be performed during normal working hours. Overtime rates will be added and charged for work performed outside normal working hours.

Respectfully submitted by:

James R. Longoria

J Salazar Construction Inc.

D. Wilson Construction
PO Box 3455
McAllen, Texas 78502
P: (956) 686-9573

Project: 24-235 Pharr FY16 DAP-Agricultural Lab, Dock Expansion I & II
9901 S Cage Blvd
Pharr, Texas 78577

RFI #75: Room 102 Slope

Status	Open		
To	Alex Corona (Brownstone Consultants, LLC) David Chacon (Brownstone Consultants, LLC) Rolando Ayala (Brownstone Consultants, LLC) Sabrina Alvarez (Brownstone Consultants, LLC)	**From**	Emiliano Larios (D Wilson Construction Company) PO Box 3455 McAllen, Texas 78502
Date Initiated	Jun 18, 2025	**Due Date**	Jun 25, 2025
Location		**Project Stage**	
Cost Impact		**Schedule Impact**	
Spec Section		**Cost Code**	
Drawing Number		**Reference**	
Linked Drawings	A-113, A-114, A-112		
Received From	Roberto Villela (D Wilson Construction Company)	**Sub Job**	
Copies To	Pilar Anzaldua-Garza (D Wilson Construction Company), Vanessa Garza (D Wilson Construction Company), Emiliano Larios (D Wilson Construction Company), Joe Pequeno (D Wilson Construction Company), Arturo Perez (D Wilson Construction Company), Claudio Velasco (D Wilson Construction Company), Roberto Villela (D Wilson Construction Company)		

Activity

Question

Question from Emiliano Larios D Wilson Construction Company *on Wednesday, Jun 18, 2025 at 04:24 PM CDT*

On Sheets A-112, A-113, and A-114, there is a note stating "Slope Floor to Drain." However, no specific slope percentage or directional guidance is provided. The structural foundation plans and details do not indicate any sloping or elevation changes. Please clarify if a floor slope is required at Room 102. If so, provide the intended slope percentage/ratio and the location of any proposed drains. Additionally, please provide revised or new section details that reflect the change in elevation. If a slope is required, please also consider how it will affect the column plinth, as the structural drawings do not currently indicate any slope.

Attachments
RFI 75 - Room 102 Slope.pdf

Awaiting an Official Response

All Replies

Response from Emiliano Larios D Wilson Construction Company *on Tuesday, Jul 8, 2025 at 09:17 AM CDT*

Response from Cameron Vester, PE / Benjamin A. Luna, PE / Andy L. Mata Jr. on 7/8/2025:
Slope will be required for a portion of Room 102 (Commercial Secondary). Approximately 40 feet of the concrete dock of Room 102 (Commercial Secondary) is to be sloped downward at 1/16" towards the eastern dock edge. As a result, the dock edge would be lowered 2-1/2". This will result in the concrete pavement being lowered by 2-1/2" to maintain the required minimum dock height of 48". Please refer to the provided exhibit, which illustrates this response. An ASI will be issued with revised Civil, Architectural, and Structural drawings to memorialize this modification.

Attachments
RFI #75 - Room 102 Slope - Response.pdf

halff

Request for Information Response

To:	D. Wilson Construction Attn. Shukan Bhakta, APM 1207 E Pecan Blvd, McAllen, TX 78501	**Date:**	7/7/2025		
From:	Benjamin A. Luna, PE	**AVO:**	57325.002	**RFI No.:**	75
Email:	bluna@halff.com	**Project:**	Pharr FY 16 DAP – Agricultural Lab, Dock Expansion I & II		
Subject:	Room 102 Slope				

☐ Letter dated:

☐ Phone call dated:

☒ Email dated: 6/18/2025

This confirms and records a request for information. Unless notified in writing within three days of date noted above, it is agreed that a response generated from the request shall be provided to this office within five days.

REQUEST

On Sheets A-112, A-113, and A-114, there is a note stating "Slope Floor to Drain." However, no specific slope percentage or directional guidance is provided. The structural foundation plans and details do not indicate any sloping or elevation changes. Please clarify if a floor slope is required at Room 102. If so, provide the intended slope percentage/ratio and the location of any proposed drains. Additionally, please provide revised or new section details that reflect the change in elevation. If a slope is required, please also consider how it will affect the column plinth, as the structural drawings do not currently indicate any slope.

ANSWER

Slope will be required for a portion of Room 102 (Commercial Secondary). Approximately 40 feet of the concrete dock of Room 102 (Commercial Secondary) is to be sloped downward at 1/16" towards the eastern dock edge. As a result, the dock edge would be lowered 2-1/2". This will result in the concrete pavement being lowered by 2-1/2" to maintain the required minimum dock height of 48". Please refer to the provided exhibit, which illustrates this response. An ASI will be issued with revised Civil, Architectural, and Structural drawings to memorialize this modification.

Answered by: Cameron Vester, PE / Benjamin A. Luna, PE / Andy L. Mata Jr.

COPIES: ☐ File ☒ Owner ☒ Owner ☐ Other

Attachments: Sheet A-101

Original RFI Document Provided by Brownstone.

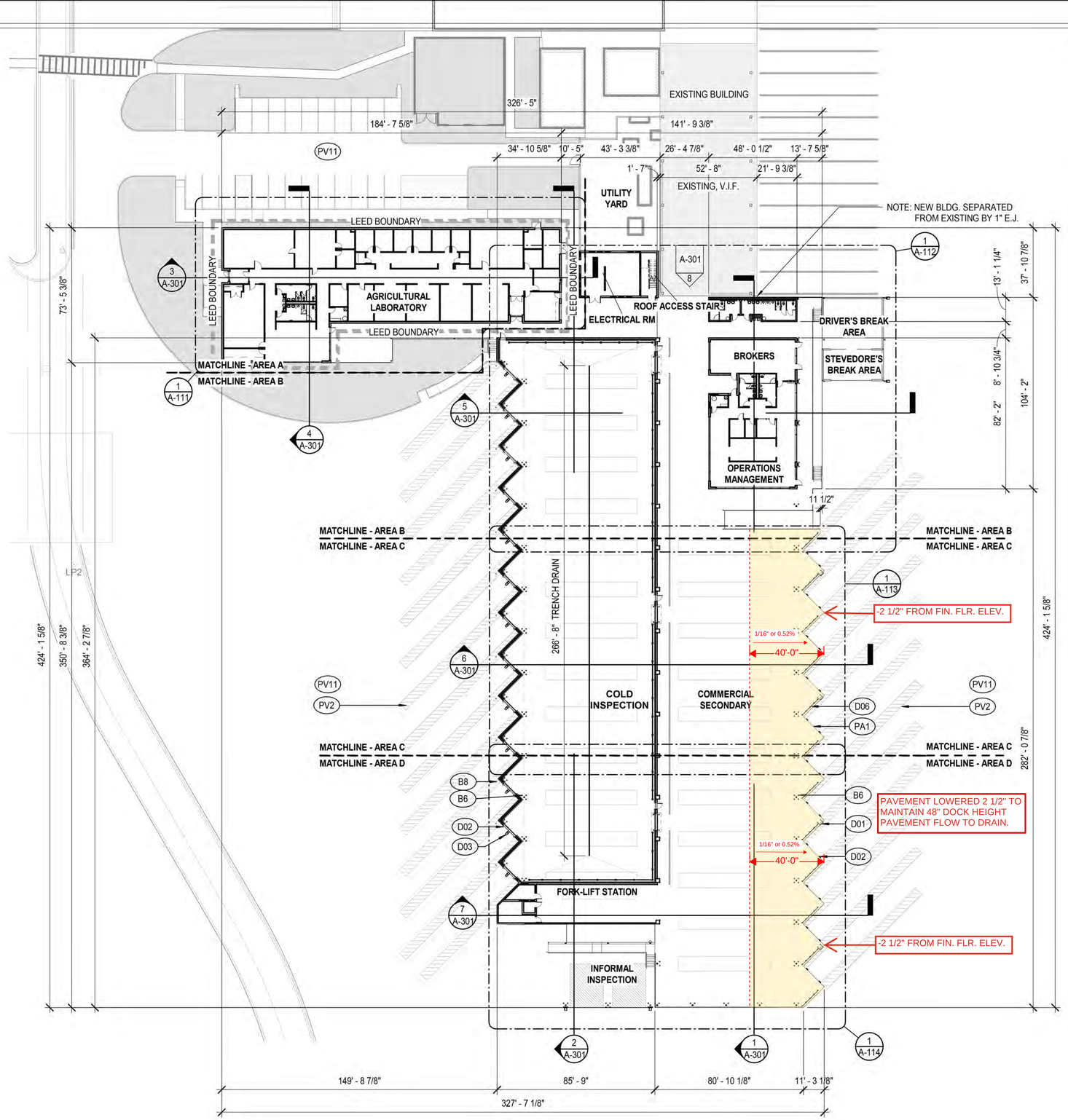

1 OVERALL FLOOR PLAN
1" = 30'-0"

NOTE: DIMENSIONS ON THIS PLAN ARE TO BUILDING CORNERS NOT TO COLUMN CENTER LINES OR SITE FEATURES.

OVERALL FLOOR PLAN KEYNOTES

KEY	DESCRIPTION	REFERENCE
B6	48-INCH HEIGHT, 6-INCH DIAMETER, GALVANIZED STEEL BOLLARD WITH CROWNED CONCRETE FILL	1/ A-014
B8	48-INCH HEIGHT, 8-INCH DIAMETER, GALVANIZED STEEL BOLLARD WITH CROWNED CONCRETE FILL	1/ A-014
D01	TRUCK ACCESS LADDER, TYP.	
D02	DOCK BUMPER PAIR, TYP.	
D03	TRUCK RESTRAINT ASSEMBLY W/ INDICATOR LIGHTING, TYPICAL AT COLD INSPECTION.	
D06	PTD. STEEL DOCK DIVIDER SCREEN WITH NUMERAL GRAPHICS	
PA1	FACE OF 48" HIGH DOCK, TYP.	
PV2	TRUCK PARKING STRIPING, TYP.	REFER CIVIL
PV11	CONCRETE MANEUVERING AREA PAVING, 11 1/2-INCH THICKNESS	REFER CIVIL

Approximately 40 feet of the concrete dock of Room 102 (Commercial Secondary) is to be sloped downward at 1/16" towards the eastern dock edge. As a result, the dock edge would be lowered 2-1/2". This will result in the concrete pavement being lowered by 2-1/2" to maintain the required minimum dock height (48 inches).

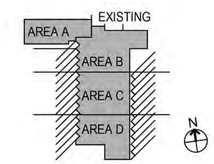

THE SEAL APPEARING ON THIS DOCUMENT WAS AUTHORIZED BY:
NAME: TIMOTHY LOTT
RA #: 28160
DATE: 10/14/2022
ALTERATION OF A SEALED DOCUMENT WITHOUT PROPER NOTIFICATION TO THE RESPONSIBLE ARCHITECT IS AN OFFENSE UNDER THE RULES AND REGULATIONS OF THE TEXAS BOARD OF ARCHITECTURAL EXAMINERS. THE RECORD COPY OF THIS DRAWING IS ON FILE AT THE OFFICES OF HALFF ASSOCIATES, INC., 1201 N. BOWSER RD, RICHARDSON, TEXAS 75081.

AVO# 33135

Pharr
CITY OF PHARR, TEXAS

GSA
GENERAL SERVICES ADMINISTRATION
819 TAYLOR STREET
FORT WORTH, TEXAS 76102-6195
817-978-3334
www.gsa.gov

©2018
TEXAS DEPARTMENT OF TRANSPORTATION

HALFF
5000 WEST MILITARY, SUITE 100, McALLEN, TEXAS 78503
TEL (956) 664-0286 FAX (956) 664-0282 TBPE FIRM #F-312

PHARR FY16 DAP - IMPORT DOCK AND AG LAB IMPROVEMENTS

OVERALL FLOOR PLAN

SCALE: AS NOTED	SHEET OF			
DN:	CONT	SECT	JOB	HIGHWAY
CK DN:	921	02	424,425,433	PHARR INT. BRIDGE
DW:	DIST		COUNTY	SHEET NO.
CK DW:	PHR		HIDALGO	A-101
TR:				
CK TR:				

RFI detail

#75 Room 102 Slope

Status	**Open** In Review
Created on	Jun 19, 2025 by **Sabrina Alvarez** (Brownstone Consultants)
RFI type	Default RFI workflow
Ball in court	**Rolando Ayala**
Due date	Jun 26, 2025

Question

-

References and Attachments

Files (1)

- 75 - Item - Room 102 Slope.pdf

Impact

Cost impact	-
Schedule impact	-

Other attributes

Priority	Normal
Discipline	-
Category	-
Location	-
Location details	-

External ID	-
Co-reviewer(s)	-

Activities	By	At
Sabrina Alvarez added a reference to a File **75 - Item - Room 102 Slope.pdf**	**Sabrina Alvarez**	Jun 20, 2025, 9:52 AM CDT
Sabrina Alvarez removed a reference to a File	**Sabrina Alvarez**	Jun 20, 2025, 9:49 AM CDT
Sabrina Alvarez added a reference to a File **75 - Item - Room 102 Slope.pdf**	**Sabrina Alvarez**	Jun 19, 2025, 8:24 AM CDT
Sabrina Alvarez (Brownstone Consultants) created this RFI in **Open** In Review status and set Ball in court to **Rolando Ayala**.	**Sabrina Alvarez**	Jun 19, 2025, 8:24 AM CDT

D. Wilson Construction
PO Box 3455
McAllen, Texas 78502
P: (956) 686-9573

Project: 24-235 Pharr FY16 DAP-Agricultural Lab, Dock Expansion I & II
9901 S Cage Blvd
Pharr, Texas 78577

RFI #75: Room 102 Slope

Status	Open		
To	Alex Corona (Brownstone Consultants, LLC) David Chacon (Brownstone Consultants, LLC) Rolando Ayala (Brownstone Consultants, LLC) Sabrina Alvarez (Brownstone Consultants, LLC)	**From**	Emiliano Larios (D Wilson Construction Company) PO Box 3455 McAllen, Texas 78502
Date Initiated	Jun 18, 2025	**Due Date**	Jun 25, 2025
Location		**Project Stage**	
Cost Impact		**Schedule Impact**	
Spec Section		**Cost Code**	
Drawing Number		**Reference**	
Linked Drawings			
Received From	Roberto Villela (D Wilson Construction Company)	**Sub Job**	
Copies To	Pilar Anzaldua-Garza (D Wilson Construction Company), Vanessa Garza (D Wilson Construction Company), Emiliano Larios (D Wilson Construction Company), Joe Pequeno (D Wilson Construction Company), Arturo Perez (D Wilson Construction Company), Claudio Velasco (D Wilson Construction Company), Roberto Villela (D Wilson Construction Company)		

Activity

Question

Question from Emiliano Larios D Wilson Construction Company *on Wednesday, Jun 18, 2025 at 04:24 PM CDT*

On Sheets A-112, A-113, and A-114, there is a note stating "Slope Floor to Drain." However, no specific slope percentage or directional guidance is provided. The structural foundation plans and details do not indicate any sloping or elevation changes. Please clarify if a floor slope is required at Room 102. If so, provide the intended slope percentage/ratio and the location of any proposed drains. Additionally, please provide revised or new section details that reflect the change in elevation. If a slope is required, please also consider how it will affect the column plinth, as the structural drawings do not currently indicate any slope.

Attachments
RFI 75 - Room 102 Slope.pdf

Awaiting an Official Response

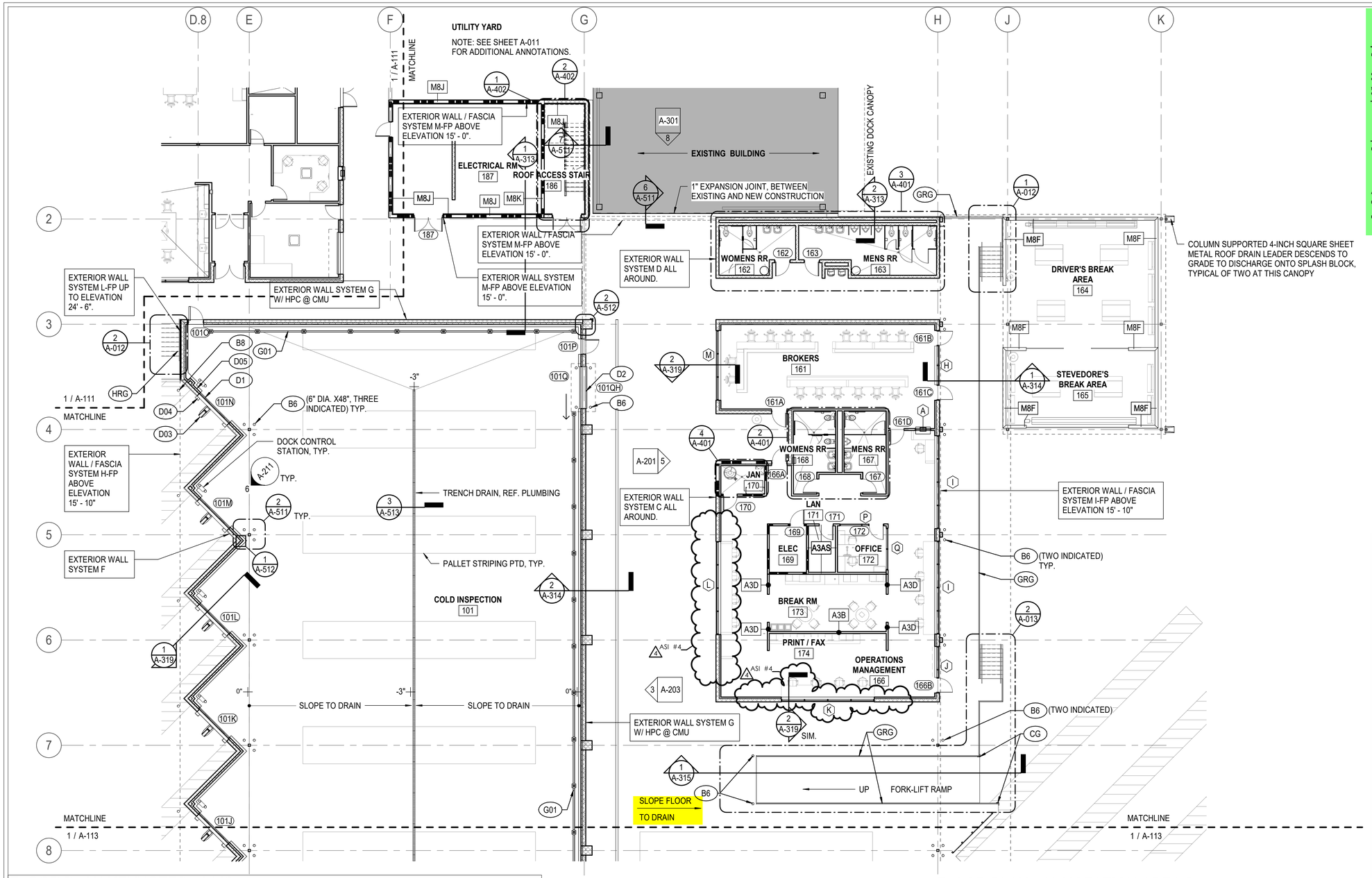

1 FLOOR PLAN - ANNOTATION AREA B
3/32" = 1'-0"

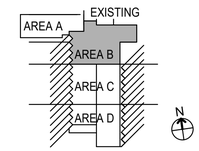

FLOOR PLAN KEYNOTES - A112

KEY

KEY	DESCRIPTION	REFERENCE
B6	48-INCH HEIGHT, 6-INCH DIAMETER, GALVANIZED STEEL BOLLARD WITH CROWNED CONCRETE FILL, PAINT SAFETY YELLOW.	1/ A-014
B8	48-INCH HEIGHT, 8-INCH DIAMETER, GALVANIZED STEEL BOLLARD WITH CROWNED CONCRETE FILL, PAINT SAFETY YELLOW.	1/ A-014
CG	6"X6"X42" STEEL CORNER GUARD, PAINT SAFETY YELLOW.	1/A-511
D1	INSULATED OVERHEAD DOOR	A-601
D2	HIGH-PERFORMANCE OVERHEAD DOOR	A-601
D03	TRUCK RESTRAINT ASSEMBLY W/ INDICATOR LIGHTING, TYPICAL AT COLD INSPECTION.	
D04	DOCK SEAL ASSEMBLY, TYPICAL AT COLD INSPECTION	
D05	DOCK LIGHT ASSEMBLY, TYPICAL AT EACH DOCK POSITION	REFER ELECTRICAL
G01	IN-PLANT SAFETY BARRIER	
GRG	GALVANIZED-FINISH GUARDRAIL ASSEMBLY	6 & 7/ A-012
HRG	GALVANIZED-FINISH HANDRAIL ASSEMBLY	6 & 7/ A-012

GENERAL NOTES - FLOOR PLAN

A REFER TO A-002 - PROJECT GENERAL NOTES FOR DIMENSIONAL CONTROL INFORMATION.

B REFER TO A-111 - FLOOR PLAN AREA - A, FOR ALL FLOOR PLAN KEYNOTES.

C REFER TO G-101 - LIFE SAFETY PLAN FOR FIRE EXTINGUISHER SPECIFIC LOCATION AND TYPE.

D PARTITIONS WHICH APPEAR ALIGNED ACROSS OPEN SPACE ARE ALIGNED. ONLY IF DIMENSIONED OFFSETS ARE INDICATED SHOULD PARTITIONS BE PLACED OUT OF ALIGNMENT.

E THE FINISH FLOOR ELEVATION, AS INDICATED ON ARCHITECTURAL FLOOR PLANS, IS ESTABLISHED TO BE THE CONCRETE FLOOR SUBSTRATE AT EACH BUILDING AREA, REGARDLESS OF WHETHER OR NOT OTHER FLOOR FINISHES ARE SCHEDULED.

GENERAL NOTES - FLOOR PLAN

F MILLWORK LENGTH DIMENSIONS ARE COORDINATED WITH THE ALCOVES AND BETWEEN THE PARTITIONS WITHIN WHICH MILLWORK IS INTENDED TO RESIDE. MILLWORK OPENING DIMENSIONS ARE COORDINATED WITH THE BREAK RM EQUIPMENT AND OTHER ACCESSORIES DESIGNED TO RESIDE WITHIN THE MILLWORK. ALWAYS FIELD MEASURE SPACES AND CONFIRM EQUIPMENT SIZES PRIOR TO MILLWORK FABRICATION TO ENSURE FIT OF ALL ELEMENTS.

G EXTERIOR AND INTERIOR FERROUS METALS AND EQUIPMENT EXPOSED TO VIEW WITHOUT A FACTORY FINISH SHALL BE PAINTED.

H ALL INTERIOR PARTITIONS ARE TYPE A3A, UNLESS NOTED OTHERWISE.

I REFER TO INTERIOR SHEETS FOR INTERIOR ELEVATIONS AND CASEWORK NOT SHOWN HERE.

J IN ROOMS WITH FLOOR DRAINS, SLOPE FLOORS TO DRAINS; REF. TO PLUMBING SHEETS.

NEGRETE & KOLAR ARCHITECTS, LLP

ARCHITECT'S SUPPLEMENTAL INSTRUCTIONS (ASI)

PROJECT: Pharr FY16 DAP - Pharr Land Port of Entry
Dock Expansion Phase I & II, and Agricultural Lab
Pharr - Reynosa International Bridge - Land Port of Entry

ASI NUMBER: 04
DATE OF ISSUANCE: 28 March 2025
NE ARCH PROJECT NUMBER: 2024-09

OWNER: City of Pharr
OWNER PROJECT NUMBER: 2324-71-510-C08-406

TO CONTRACTOR: Brownstone Consultants / D. Wilson Construction Co.
CONTRACT FOR: New Construction

The Work shall be carried out in accordance with the following supplemental instructions issued in accordance with the Contract Documents without change in Contract Sum or Contract Time. Proceeding with the Work in accordance with these instructions indicates your acknowledgement that there will be no change in the Contract Sum or Contract Time.

Prior to proceeding with the Work in accordance with these instructions, indicate your acceptance of these instructions for minor change to the Work as consistent with the Contract Documents and return a copy to the Architect.

DESCRIPTION:
1. Reduce length of Window Type K and Window Type L, located in Operations Management 166 and Break Rm 173 respectively, as indicated in attached exhibit drawings A-112, A-116, A-201, & A-611.
2. Infill with matching adjacent (CMU) wall type with associated interior and exterior finishes, as indicated in attached exhibit drawings A-112, A-116, A-201, & A-611.
3. Disregard non-existing steel column at Grid E-14 as indicated in attached exhibit drawing A-114. Same column (Grid E-14) shown in project Construction Drawing Sheets A-101, A-134, A-301, A-801, & I-104 (but not included in attached exhibit) are also disregarded.

ATTACHMENTS: Exhibit ASI-04: 6 pages.

BY: Andrés L. Mata, Jr., Associate AIA
Project Manager

FOR: David Negrete, AIA
Project Architect

REGISTERED ARCHITECT DAVID NEGRETE 11640 STATE OF TEXAS
03/28/2025

THE SEAL APPEARING ON THIS DOCUMENT WAS AUTHORIZED BY:
NAME: TIMOTHY LOTT
RA #: 28160
DATE: 08/01/22
ALTERATION OF A SEALED DOCUMENT WITHOUT PROPER NOTIFICATION TO THE RESPONSIBLE ARCHITECT IS AN OFFENSE UNDER THE RULES AND REGULATIONS OF THE TEXAS BOARD OF ARCHITECTURAL EXAMINERS. THE RECORD COPY OF THIS DRAWING IS ON FILE AT THE OFFICES OF HALFF ASSOCIATES, INC., 1201 N. BOWSER RD, RICHARDSON, TEXAS 75081.

REGISTERED ARCHITECT TIMOTHY LOTT 28160 STATE OF TEXAS
8/1/22

AVO# 33135

Pharr
CITY OF PHARR, TEXAS

GSA
GENERAL SERVICES ADMINISTRATION
819 TAYLOR STREET
FORT WORTH, TEXAS 76102-6195
817-978-3334
www.gsa.gov

© 2018
TEXAS DEPARTMENT OF TRANSPORTATION

HALFF
5000 WEST MILITARY, SUITE 100, McALLEN, TEXAS 78503
TEL (956) 664-0286 FAX (956) 664-0282 TBPE FIRM #F-312

PHARR FY16 DAP - IMPORT DOCK AND AG LAB IMPROVEMENTS

FLOOR PLAN - ANNOTATION AREA B

SCALE: AS NOTED	SHEET OF			
DN:	CONT	SECT	JOB	HIGHWAY
CK DN:	921	02	424,425,433	PHARR INT. BRIDGE
DW:	DIST		COUNTY	SHEET NO.
CK DW:	PHR		HIDALGO	A-112
TR:				
CK TR:				

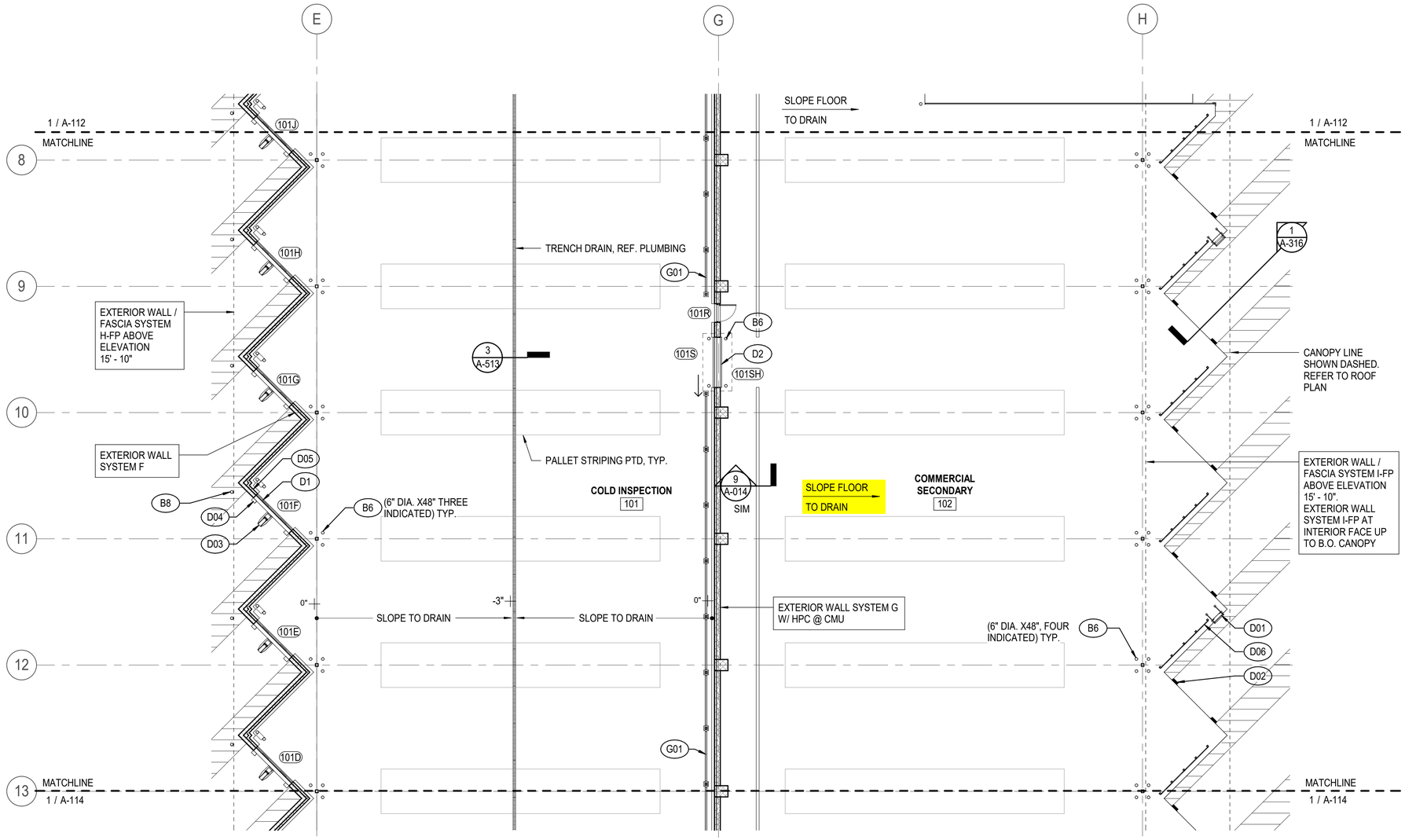

1 FLOOR PLAN - ANNOTATION AREA C
3/32" = 1'-0"

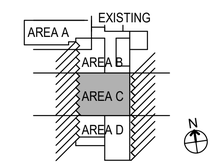

FLOOR PLAN KEYNOTES - A113

KEY

KEY	DESCRIPTION	REFERENCE
B6	48-INCH HEIGHT, 6-INCH DIAMETER, GALVANIZED STEEL BOLLARD WITH CROWNED CONCRETE FILL, PAINT SAFETY YELLOW.	1/ A-014
B8	48-INCH HEIGHT, 8-INCH DIAMETER, GALVANIZED STEEL BOLLARD WITH CROWNED CONCRETE FILL, PAINT SAFETY YELLOW.	1/ A-014
D1	INSULATED OVERHEAD DOOR	A-601
D01	TRUCK ACCESS LADDER, TYP.	
D2	HIGH-PERFORMANCE OVERHEAD DOOR	A-601
D02	DOCK BUMPER PAIR, TYP.	
D03	TRUCK RESTRAINT ASSEMBLY W/ INDICATOR LIGHTING, TYPICAL AT COLD INSPECTION.	
D04	DOCK SEAL ASSEMBLY, TYPICAL AT COLD INSPECTION	
D05	DOCK LIGHT ASSEMBLY, TYPICAL AT EACH DOCK POSITION	REFER ELECTRICAL
D06	PTD. STEEL DOCK DIVIDER SCREEN WITH NUMERAL GRAPHICS	1/ A-014
G01	IN-PLANT SAFETY BARRIER	

GENERAL NOTES - FLOOR PLAN

A REFER TO A-002 - PROJECT GENERAL NOTES FOR DIMENSIONAL CONTROL INFORMATION.

B REFER TO A-111 - FLOOR PLAN AREA - A, FOR ALL FLOOR PLAN KEYNOTES.

C REFER TO G-101 - LIFE SAFETY PLAN FOR FIRE EXTINGUISHER SPECIFIC LOCATION AND TYPE.

D PARTITIONS WHICH APPEAR ALIGNED ACROSS OPEN SPACE ARE ALIGNED. ONLY IF DIMENSIONED OFFSETS ARE INDICATED SHOULD PARTITIONS BE PLACED OUT OF ALIGNMENT.

E THE FINISH FLOOR ELEVATION, AS INDICATED ON ARCHITECTURAL FLOOR PLANS, IS ESTABLISHED TO BE THE CONCRETE FLOOR SUBSTRATE AT EACH BUILDING AREA, REGARDLESS OF WHETHER OR NOT OTHER FLOOR FINISHES ARE SCHEDULED.

GENERAL NOTES - FLOOR PLAN

F MILLWORK LENGTH DIMENSIONS ARE COORDINATED WITH THE ALCOVES AND BETWEEN THE PARTITIONS WITHIN WHICH MILLWORK IS INTENDED TO RESIDE. MILLWORK OPENING DIMENSIONS ARE COORDINATED WITH THE BREAK RM EQUIPMENT AND OTHER ACCESSORIES DESIGNED TO RESIDE WITHIN THE MILLWORK. ALWAYS FIELD MEASURE SPACES AND CONFIRM EQUIPMENT SIZES PRIOR TO MILLWORK FABRICATION TO ENSURE FIT OF ALL ELEMENTS.

G EXTERIOR AND INTERIOR FERROUS METALS AND EQUIPMENT EXPOSED TO VIEW WITHOUT A FACTORY FINISH SHALL BE PAINTED.

H ALL INTERIOR PARTITIONS ARE TYPE A3A, UNLESS NOTED OTHERWISE.

I REFER TO INTERIOR SHEETS FOR INTERIOR ELEVATIONS AND CASEWORK NOT SHOWN HERE.

J IN ROOMS WITH FLOOR DRAINS, SLOPE FLOORS TO DRAINS; REF. TO PLUMBING SHEETS.

THE SEAL APPEARING ON THIS DOCUMENT WAS AUTHORIZED BY:
NAME: TIMOTHY LOTT
RA #: 28160
DATE: 10/14/2022

ALTERATION OF A SEALED DOCUMENT WITHOUT PROPER NOTIFICATION TO THE RESPONSIBLE ARCHITECT IS AN OFFENSE UNDER THE RULES AND REGULATIONS OF THE TEXAS BOARD OF ARCHITECTURAL EXAMINERS. THE RECORD COPY OF THIS DRAWING IS ON FILE AT THE OFFICES OF HALFF ASSOCIATES, INC., 1201 N. BOWSER RD, RICHARDSON, TEXAS 75081.

AVO# 33135

Pharr
CITY OF PHARR, TEXAS

GSA
GENERAL SERVICES ADMINISTRATION
819 TAYLOR STREET
FORT WORTH, TEXAS 76102-6195
817-978-3334
www.gsa.gov

© 2018
TEXAS DEPARTMENT OF TRANSPORTATION

HALFF
5000 WEST MILITARY, SUITE 100, McALLEN, TEXAS 78503
TEL (956) 664-0286 FAX (956) 664-0282 TBPE FIRM #F-312

PHARR FY16 DAP - IMPORT DOCK AND AG LAB IMPROVEMENTS

FLOOR PLAN - ANNOTATION AREA C

SCALE: AS NOTED	SHEET OF			
DN:	CONT	SECT	JOB	HIGHWAY
CK DN:	921	02	424,425,433	PHARR INT. BRIDGE
DW:	DIST		COUNTY	SHEET NO.
CK DW:	PHR		HIDALGO	A-113
TR:				
CK TR:				

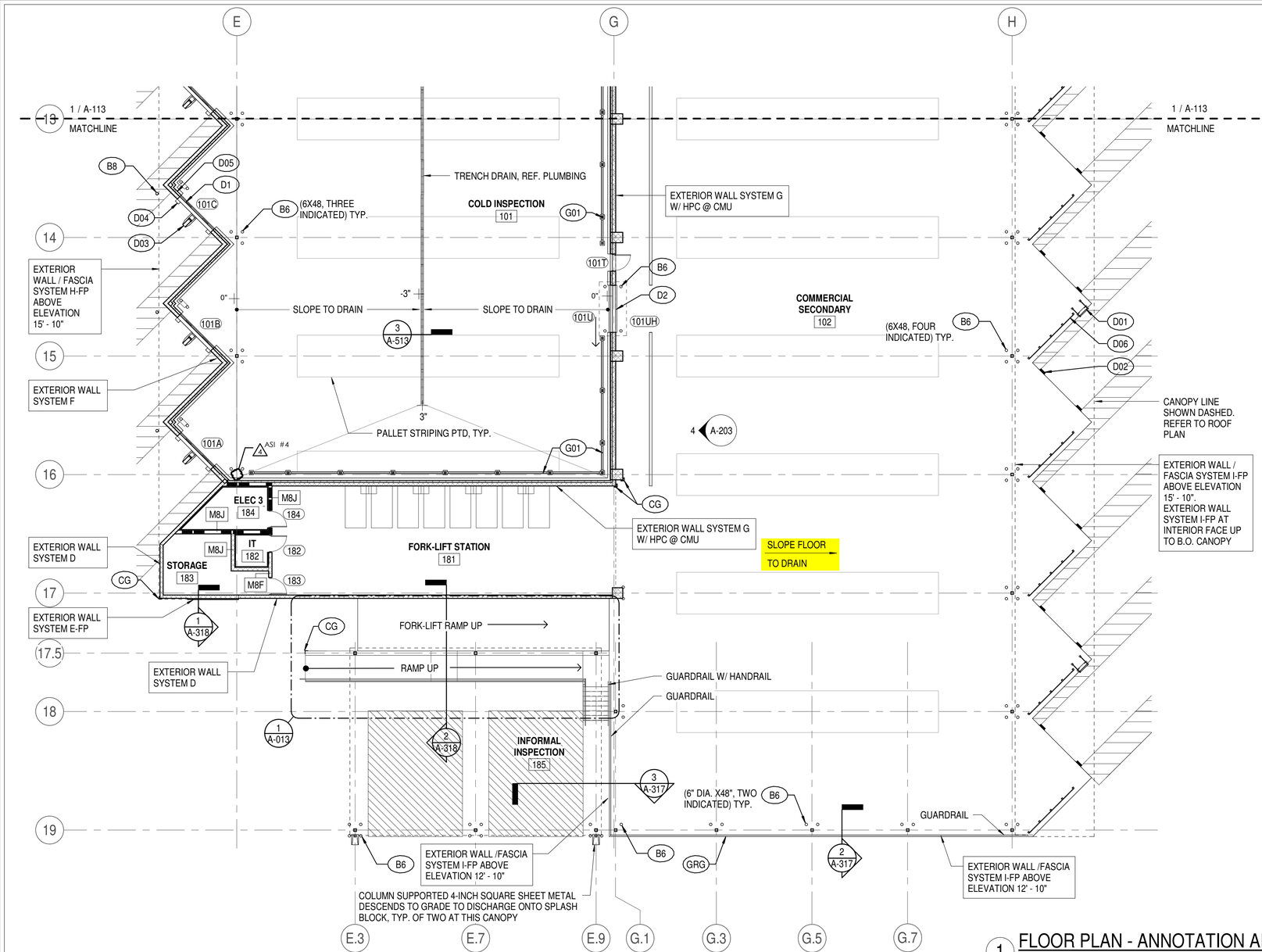

1 FLOOR PLAN - ANNOTATION AREA D
3/32" = 1'-0"

FLOOR PLAN KEYNOTES - A114

KEY

KEY	DESCRIPTION	REFERENCE
B6	48-INCH HEIGHT, 6-INCH DIAMETER, GALVANIZED STEEL BOLLARD WITH CROWNED CONCRETE FILL, PAINT SAFETY YELLOW.	1/ A-014
B8	48-INCH HEIGHT, 8-INCH DIAMETER, GALVANIZED STEEL BOLLARD WITH CROWNED CONCRETE FILL, PAINT SAFETY YELLOW.	1/ A-014
CG	7"X7"X42" STEEL CORNER GUARD, PAINT SAFETY YELLOW.	1/A-511
D1	INSULATED OVERHEAD DOOR	A-601
D01	TRUCK ACCESS LADDER, TYP.	
D2	HIGH-PERFORMANCE OVERHEAD DOOR	A-601
D02	DOCK BUMPER PAIR, TYP.	
D03	TRUCK RESTRAINT ASSEMBLY W/ INDICATOR LIGHTING, TYPICAL AT COLD INSPECTION.	
D04	DOCK SEAL ASSEMBLY, TYPICAL AT COLD INSPECTION	
D05	DOCK LIGHT ASSEMBLY, TYPICAL AT EACH DOCK POSITION	REFER ELECTRICAL
D06	PTD. STEEL DOCK DIVIDER SCREEN WITH NUMERAL GRAPHICS	
G01	IN-PLANT SAFETY BARRIER	
GRG	GALVANIZED-FINISH GUARDRAIL ASSEMBLY	6 & 7/ A-012

GENERAL NOTES - FLOOR PLAN

A REFER TO A-002 - PROJECT GENERAL NOTES FOR DIMENSIONAL CONTROL INFORMATION.
B REFER TO A-111 - FLOOR PLAN AREA - A, FOR ALL FLOOR PLAN KEYNOTES.
C REFER TO G-101 - LIFE SAFETY PLAN FOR FIRE EXTINGUISHER SPECIFIC LOCATION AND TYPE.
D PARTITIONS WHICH APPEAR ALIGNED ACROSS OPEN SPACE ARE ALIGNED. ONLY IF DIMENSIONED OFFSETS ARE INDICATED SHOULD PARTITIONS BE PLACED OUT OF ALIGNMENT.
E THE FINISH FLOOR ELEVATION, AS INDICATED ON ARCHITECTURAL FLOOR PLANS, IS ESTABLISHED TO BE THE CONCRETE FLOOR SUBSTRATE AT EACH BUILDING AREA, REGARDLESS OF WHETHER OR NOT OTHER FLOOR FINISHES ARE SCHEDULED.

GENERAL NOTES - FLOOR PLAN

F MILLWORK LENGTH DIMENSIONS ARE COORDINATED WITH THE ALCOVES AND BETWEEN THE PARTITIONS WITHIN WHICH MILLWORK IS INTENDED TO RESIDE. MILLWORK OPENING DIMENSIONS ARE COORDINATED WITH THE BREAK RM EQUIPMENT AND OTHER ACCESSORIES DESIGNED TO RESIDE WITHIN THE MILLWORK. ALWAYS FIELD MEASURE SPACES AND CONFIRM EQUIPMENT SIZES PRIOR TO MILLWORK FABRICATION TO ENSURE FIT OF ALL ELEMENTS.
G EXTERIOR AND INTERIOR FERROUS METALS AND EQUIPMENT EXPOSED TO VIEW WITHOUT A FACTORY FINISH SHALL BE PAINTED.
H ALL INTERIOR PARTITIONS ARE TYPE A3A, UNLESS NOTED OTHERWISE.
I REFER TO INTERIOR SHEETS FOR INTERIOR ELEVATIONS AND CASEWORK NOT SHOWN HERE.
J IN ROOMS WITH FLOOR DRAINS, SLOPE FLOORS TO DRAINS; REF. TO PLUMBING SHEETS.

NEGRETE & KOLAR ARCHITECTS, LLP

ARCHITECT'S SUPPLEMENTAL INSTRUCTIONS (ASI)

PROJECT: Pharr FY16 DAP - Pharr Land Port of Entry
Dock Expansion Phase I & II, and Agricultural Lab
Pharr - Reynosa International Bridge - Land Port of Entry

ASI NUMBER: 04
DATE OF ISSUANCE: 28 March 2025
NK ARCH PROJECT NUMBER: 2024-09

OWNER: City of Pharr
OWNER PROJECT NUMBER: 2324-71-510-C08-406

TO CONTRACTOR: Brownstone Consultants / D. Wilson Construction Co.
CONTRACT FOR: New Construction

The Work shall be carried out in accordance with the following supplemental instructions issued in accordance with the Contract Documents without change in Contract Sum or Contract Time. Proceeding with the Work in accordance with these instructions indicates your acknowledgement that there will be no change in the Contract Sum or Contract Time.

Prior to proceeding with the Work in accordance with these instructions, indicate your acceptance of these instructions for minor change to the Work as consistent with the Contract Documents and return a copy to the Architect.

DESCRIPTION:
1. Reduce length of Window Type K and Window Type L, located in Operations Management 166 and Break Rm 173 respectively, as indicated in attached exhibit drawings A-112, A-116, A-201, & A-611.
2. Infill with matching adjacent (CMU) wall type with associated interior and exterior finishes, as indicated in attached exhibit drawings A-112, A-116, A-201, & A-611.
3. Disregard non-existing steel column at Grid E-16 as indicated in attached exhibit drawing A-114. Some column (Grid E-16) shown in project Construction Drawing Sheets A-101, A-134, A-301, A-801, & I-104 (but not included in attached exhibit) are also disregarded.

ATTACHMENTS: Exhibit ASI-04; 6 pages.

BY: Andrés L. Mata, Jr., Associate AIA
Project Manager

FOR: David Negrete, AIA
Project Architect

REGISTERED ARCHITECT TIMOTHY LOTT 28160 STATE OF TEXAS
03/28/2025

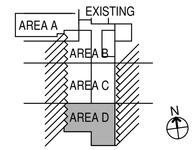

REGISTERED ARCHITECT TIMOTHY LOTT 28160 STATE OF TEXAS
8/1/22

THE SEAL APPEARING ON THIS DOCUMENT WAS AUTHORIZED BY:
NAME: TIMOTHY LOTT
RA #: 28160
DATE: 08/01/22
ALTERATION OF A SEALED DOCUMENT WITHOUT PROPER NOTIFICATION TO THE RESPONSIBLE ARCHITECT IS AN OFFENSE UNDER THE RULES AND REGULATIONS OF THE TEXAS BOARD OF ARCHITECTURAL EXAMINERS. THE RECORD COPY OF THIS DRAWING IS ON FILE AT THE OFFICES OF HALFF ASSOCIATES, INC., 1201 N. BOWSER RD, RICHARDSON, TEXAS 75081.

AVO# 33135

Pharr
CITY OF PHARR, TEXAS

GSA
GENERAL SERVICES ADMINISTRATION
819 TAYLOR STREET
FORT WORTH, TEXAS 76102-6195
817-978-3334
www.gsa.gov

© 2018
TEXAS DEPARTMENT OF TRANSPORTATION

HALFF
5000 WEST MILITARY, SUITE 100, McALLEN, TEXAS 78503
TEL (956) 664-0286 FAX (956) 664-0282 TBPE FIRM #F-312

PHARR FY16 DAP - IMPORT DOCK AND AG LAB IMPROVEMENTS

FLOOR PLAN - ANNOTATION AREA D

SCALE: AS NOTED			SHEET OF	
DN:	CONT	SECT	JOB	HIGHWAY
CK DN:	921	02	424,425,433	PHARR INT. BRIDGE
DW:	DIST		COUNTY	SHEET NO.
CK DW:	PHR		HIDALGO	A-114
TR:				
CK TR:				

AVO# 33135

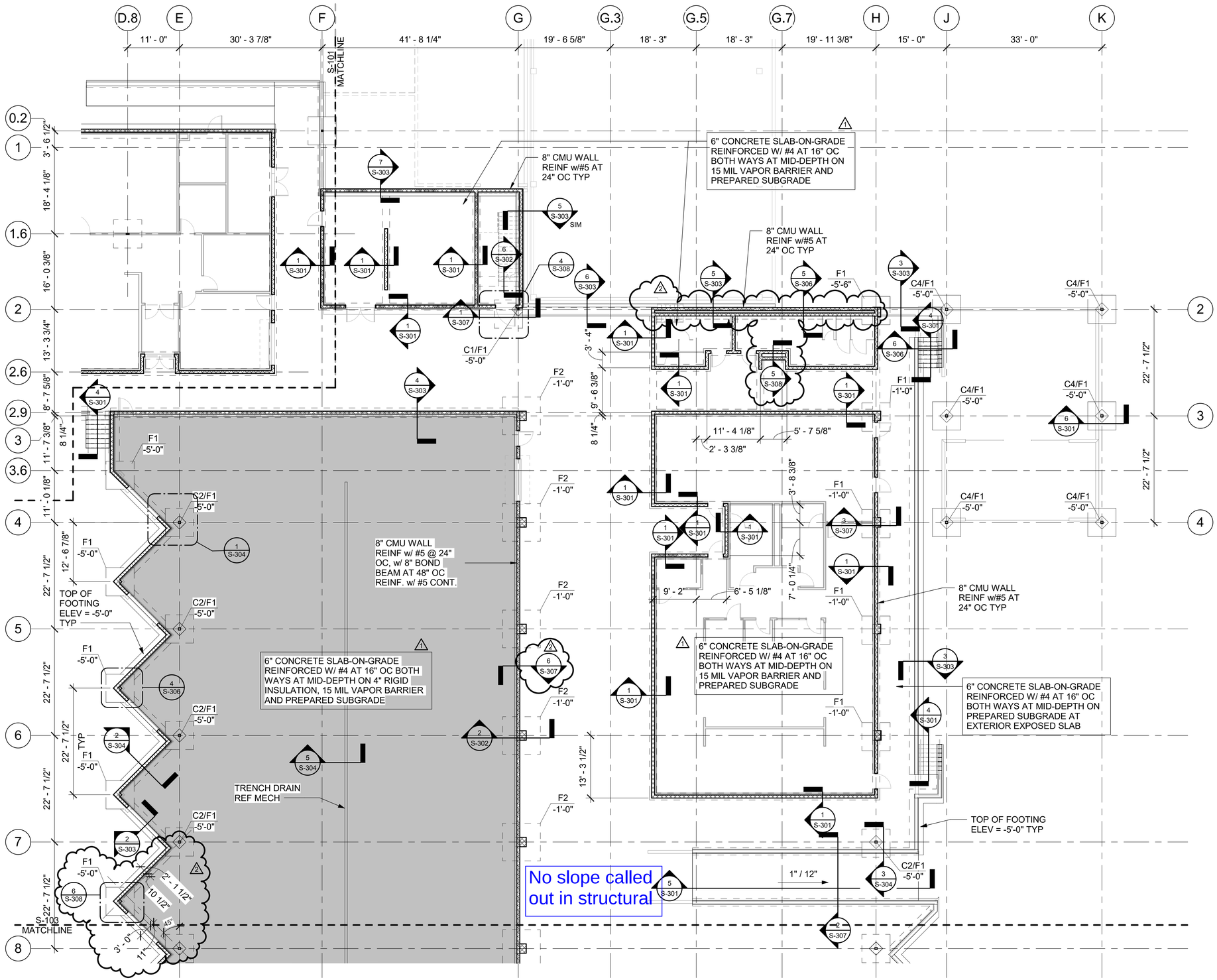

1 FOUNDATION PLAN - AREA B
3/32" = 1'-0"

halff

April 11, 2025
57325.002

ASI 005.1
Pharr FY16 DAP - Agricultural Lab, Dock Expansion I & II
City of Pharr
GSA & CBP
TxDOT

This Modification shall be considered part of the Bidding/Construction Documents and is issued to change, amplify, add to, delete from, or otherwise explain the plans and specifications. Where provisions of this Modification differ from those of the original Bidding/Construction Documents, this Modification shall take precedence over the original plans and specifications and shall govern.

CONSTRUCTION DOCUMENT SHEETS

S-102

- Modify footing along grid 2 between grids G.3 and H per concrete reinforcement submittal response.
- Addition of detail for interior grade beam at double CMU wall (5/S-308).
- Addition of detail for concrete pilaster at cold storage (6/S-308), typical at exterior corners of cold storage loading dock.
- Addition of dimensions per contractor request.
- Addition of detail Foundation Detail (6/S-307) at interior demising wall as requested by contractor.

S-103

- Addition of detail for concrete pilaster at cold storage (6/S-308), typical at exterior corners of cold storage loading dock.
- Addition of dimensions per contractor request.
- Addition of detail Foundation Detail (6/S-307) at interior demising wall as requested by contractor.

S-104

- Addition of detail for concrete pilaster at cold storage (6/S-308), typical at exterior corners of cold storage loading dock.
- Addition of dimensions per contractor request.
- Addition of detail Foundation Detail (6/S-307) at interior demising wall as requested by contractor.

S-303

- Addition of heel in detail 5.

S-304

- Addition of dimensions on details 1/S-304 and 2/S-304 per contractor request.

S-306

- Addition of heel in detail 5/S-306.

S-307

- Addition of detail 6/S-307 for clarity per contractor request.
- Addition of dimensions on detail 4/S-307 per contractor request.

S-308

- Addition of details 5, 6 and 7.

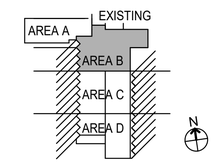

No.	Date	Description
1	06/13/2024	ASI 001
2	04/11/2025	ASI 005.1

THE SEAL APPEARING ON THIS DOCUMENT WAS AUTHORIZED BY:
NAME: JAMES C. VESTER
PE #: 128858
DATE: 04/11/2025
ALTERATION OF A SEALED DOCUMENT WITHOUT PROPER NOTIFICATION TO THE ENGINEER OF RECORD IS AN OFFENSE UNDER THE RULES AND REGULATIONS OF THE TEXAS BOARD OF PROFESSIONAL ENGINEERS. THE RECORD COPY OF THIS DRAWING IS ON FILE AT THE OFFICES OF HALFF ASSOCIATES, INC., 4000 FOSSIL CREEK BLVD., FORT WORTH, TEXAS 76078.

STATE OF TEXAS
JAMES C. VESTER
128858
LICENSED
PROFESSIONAL ENGINEER
04/11/2025

AVO# 33135

Pharr
CITY OF PHARR, TEXAS

GSA
GENERAL SERVICES ADMINISTRATION
819 TAYLOR STREET
FORT WORTH, TEXAS 76102-6195
817-978-3334
www.gsa.gov

© 2018
TEXAS DEPARTMENT OF TRANSPORTATION

HALFF
5000 WEST MILITARY, SUITE 100, McALLEN, TEXAS 78503
TEL (956) 664-0286 FAX (956) 664-0282 TBPE FIRM #F-312

PHARR FY16 DAP - IMPORT DOCK AND AG LAB IMPROVEMENTS

FOUNDATION PLAN - AREA B

SCALE: AS NOTED	SHEET OF			
DN:	CONT	SECT	JOB	HIGHWAY
CK DN:	921	02	424,425,433	PHARR INT. BRIDGE
DW:	DIST		COUNTY	SHEET NO.
CK DW:	PHR		HIDALGO	S-102
TR:				
CK TR:				

AVO# 33135

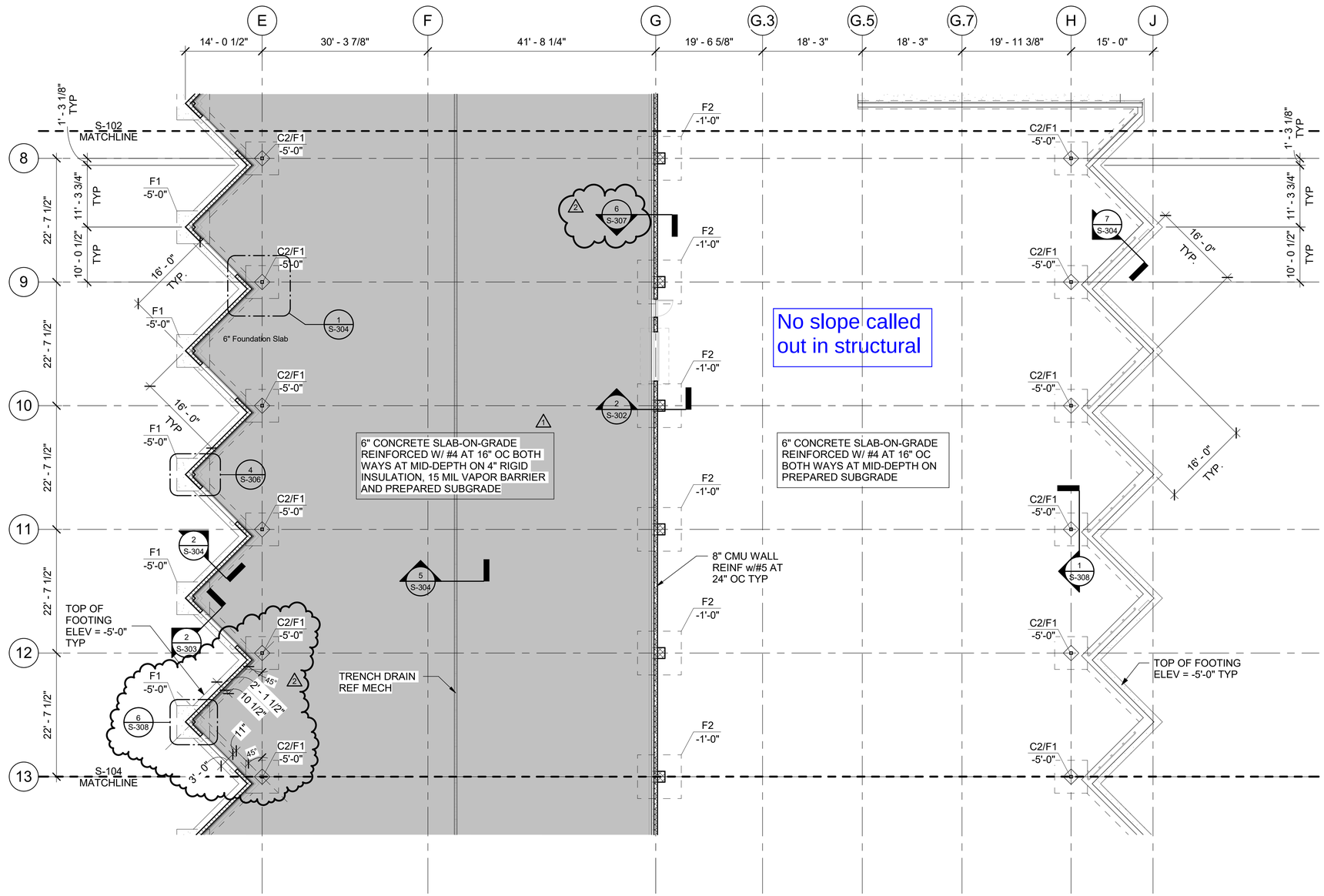

1 FOUNDATION PLAN - AREA C
3/32" = 1'-0"

halff

April 11, 2025
57325.002

ASI 005.1
Phar FY16 DAP - Agricultural Lab, Dock Expansion I & II
City of Phar
GSA & CBP
TxDOT

This Modification shall be considered part of the Bidding/Construction Documents and is issued to change, amplify, add to, delete from, or otherwise explain the plans and specifications. Where provisions of this Modification differ from those of the original Bidding/Construction Documents, this Modification shall take precedence over the original plans and specifications and shall govern.

CONSTRUCTION DOCUMENT SHEETS

S-102

- Modify footing along grid 2 between grids G.3 and H per concrete reinforcement submittal response.
- Addition of detail for interior grade beam at double CMU wall (5/S-308).
- Addition of detail for concrete pilaster at cold storage (6/S-308), typical at exterior corners of cold storage loading dock.
- Addition of dimensions per contractor request.
- Addition of detail Foundation Detail (6/S-307) at interior demising wall as requested by contractor.

S-103

- Addition of detail for concrete pilaster at cold storage (6/S-308), typical at exterior corners of cold storage loading dock.
- Addition of dimensions per contractor request.
- Addition of detail Foundation Detail (6/S-307) at interior demising wall as requested by contractor.

S-104

- Addition of detail for concrete pilaster at cold storage (6/S-308), typical at exterior corners of cold storage loading dock.
- Addition of dimensions per contractor request.
- Addition of detail Foundation Detail (6/S-307) at interior demising wall as requested by contractor.

S-303

- Addition of heel in detail 5.

S-304

- Addition of dimensions on details 1/S-304 and 2/S-304 per contractor request.

S-306

- Addition of heel in detail 5/S-306.

S-307

- Addition of detail 6/S-307 for clarity per contractor request.
- Addition of dimensions on detail 4/S-307 per contractor request.

S-308

- Addition of details 5, 6 and 7.

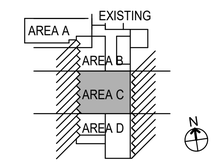

No.	Date	Description
1	06/13/2024	ASI 001
2	04/11/2025	ASI 005.1

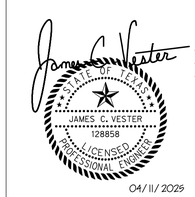

THE SEAL APPEARING ON THIS DOCUMENT WAS AUTHORIZED BY:
NAME: JAMES C. VESTER
PE #: 128858
DATE: 04/11/2025
ALTERATION OF A SEALED DOCUMENT WITHOUT PROPER NOTIFICATION TO THE ENGINEER OF RECORD IS AN OFFENSE UNDER THE RULES AND REGULATIONS OF THE TEXAS BOARD OF PROFESSIONAL ENGINEERS. THE RECORD COPY OF THIS DRAWING IS ON FILE AT THE OFFICES OF HALFF ASSOCIATES, INC., 4000 FOSSIL CREEK BLVD., FORT WORTH, TEXAS 76078.

AVO# 33135

Pharr
CITY OF PHARR, TEXAS

GSA
GENERAL SERVICES ADMINISTRATION
819 TAYLOR STREET
FORT WORTH, TEXAS 76102-6195
817-978-3334
www.gsa.gov

©2018
TEXAS DEPARTMENT OF TRANSPORTATION

HALFF
5000 WEST MILITARY, SUITE 100, McALLEN, TEXAS 78503
TEL (956) 664-0286 FAX (956) 664-0282 TBPE FIRM #F-312

PHARR FY16 DAP - IMPORT DOCK AND AG LAB IMPROVEMENTS

FOUNDATION PLAN - AREA C

SCALE: AS NOTED	SHEET OF			
DN:	CONT	SECT	JOB	HIGHWAY
CK DN:	921	02	424,425,433	PHARR INT. BRIDGE
DW:	DIST		COUNTY	SHEET NO.
CK DW:	PHR		HIDALGO	S-103
TR:				
CK TR:				

AVO# 33135

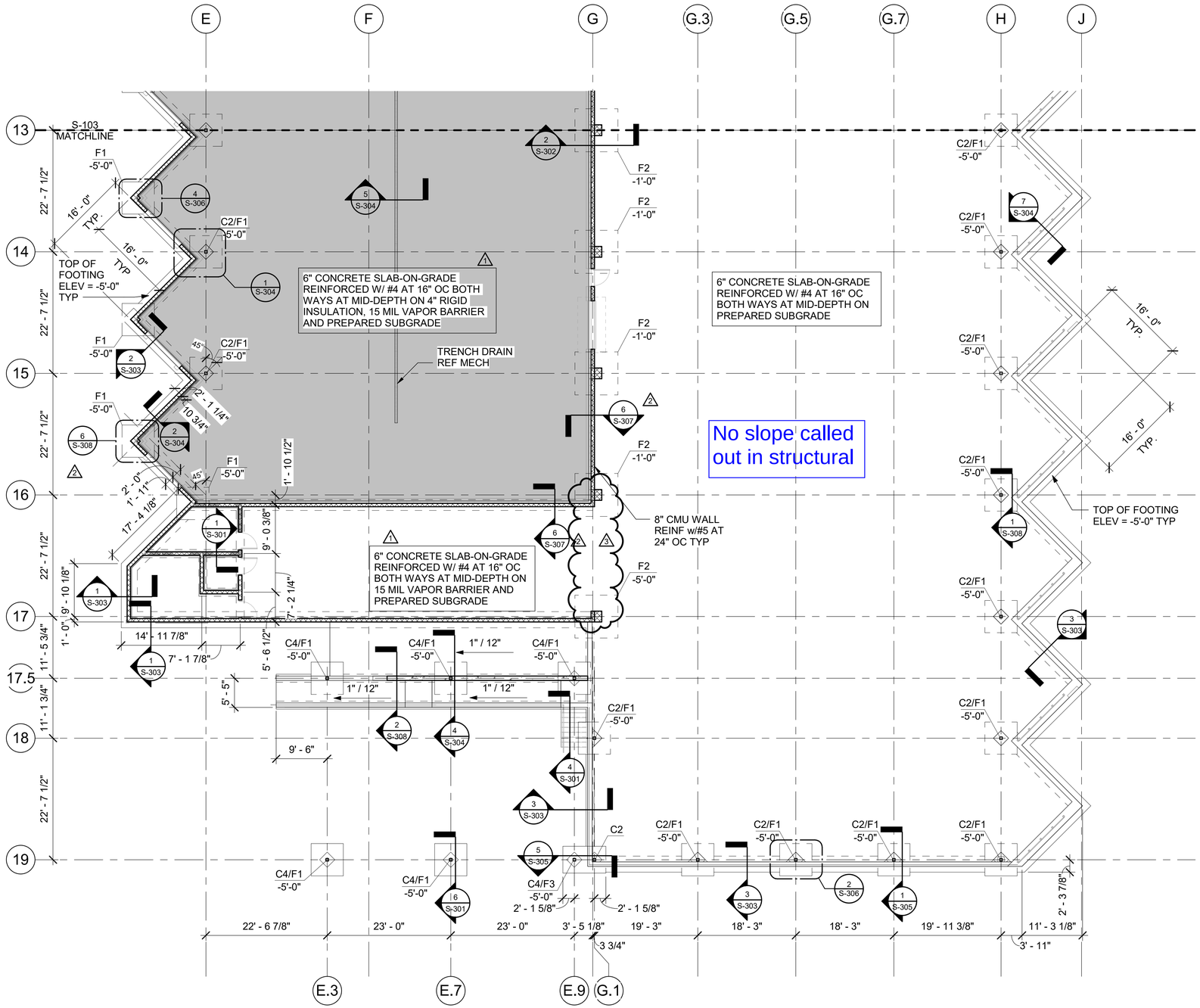

1 FOUNDATION PLAN - AREA D
3/32" = 1'-0"

halff

April 21, 2025
57325.002

ASI 009

Pharr FY16 DAP - Agricultural Lab, Dock Expansion I & II
City of Pharr
GSA & CBP
TxDOT

This Modification shall be considered part of the Bidding/Construction Documents and is issued to change, amplify, add to, delete from, or otherwise explain the plans and specifications. Where provisions of this Modification differ from those of the original Bidding/Construction Documents, this Modification shall take precedence over the original plans and specifications and shall govern.

CONSTRUCTION DOCUMENT SHEETS

S-104

- Removed the CMU wall on the foundation plan sheet, S-104, between grid 16 and 17. The wall does not extend to the ground and is supported by a CMU lintel spanning from grid 16 to 17.

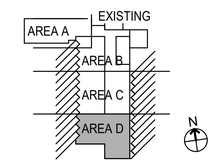

No.	Date	Description
1	06/13/2024	ASI 001
2	04/11/2025	ASI 005.1
3	04/21/2025	ASI 009

THE SEAL APPEARING ON THIS DOCUMENT WAS AUTHORIZED BY:
NAME: JAMES C. VESTER
PE #: 128858
DATE: 04/11/2025
ALTERATION OF A SEALED DOCUMENT WITHOUT PROPER NOTIFICATION TO THE ENGINEER OF RECORD IS AN OFFENSE UNDER THE RULES AND REGULATIONS OF THE TEXAS BOARD OF PROFESSIONAL ENGINEERS. THE RECORD COPY OF THIS DRAWING IS ON FILE AT THE OFFICES OF HALFF ASSOCIATES, INC., 4000 FOSSIL CREEK BLVD., FORT WORTH, TEXAS 76078.

STATE OF TEXAS
JAMES C. VESTER
128858
LICENSED
PROFESSIONAL ENGINEER
04/21/2025

AVO# 33135

Pharr
CITY OF PHARR, TEXAS

GSA
GENERAL SERVICES ADMINISTRATION
819 TAYLOR STREET
FORT WORTH, TEXAS 76102-6195
817-978-3334
www.gsa.gov

©2018
TEXAS DEPARTMENT OF TRANSPORTATION

HALFF
5000 WEST MILITARY, SUITE 100, McALLEN, TEXAS 78503
TEL (956) 664-0286 FAX (956) 664-0282 TBPE FIRM #F-312

PHARR FY16 DAP - IMPORT DOCK AND AG LAB IMPROVEMENTS

FOUNDATION PLAN - AREA D

SCALE: AS NOTED	SHEET OF			
DN:	CONT	SECT	JOB	HIGHWAY
CK DN:	921	02	424,425,433	PHARR INT. BRIDGE
DW:	DIST		COUNTY	SHEET NO.
CK DW:	PHR		HIDALGO	S-104
TR:				
CK TR:				

AVO# 33135

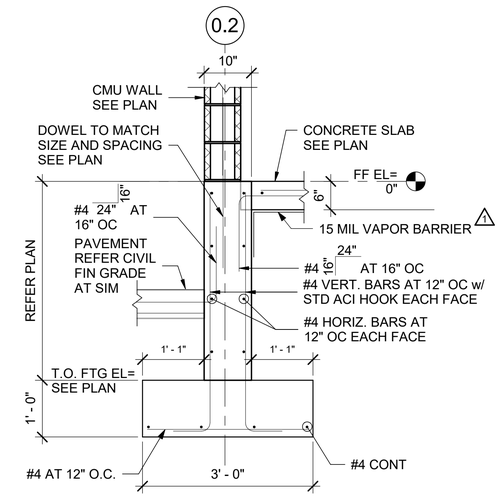

1 TYPICAL EXTERIOR FOUNDATION SECTION AT CMU WALL
3/4" = 1'-0"

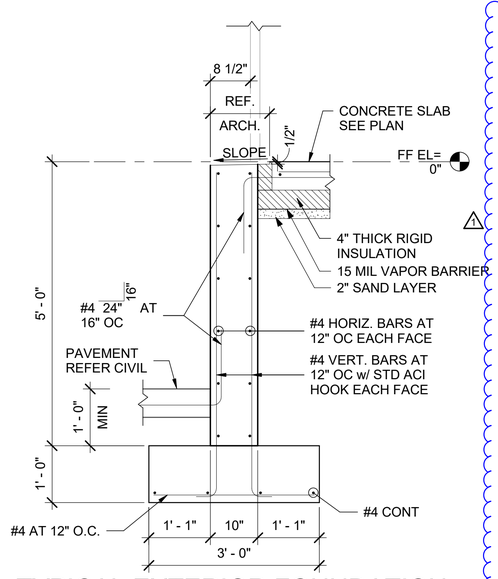

2 TYPICAL EXTERIOR FOUNDATION SECTION AT COLD STORAGE DOOR
3/4" = 1'-0"

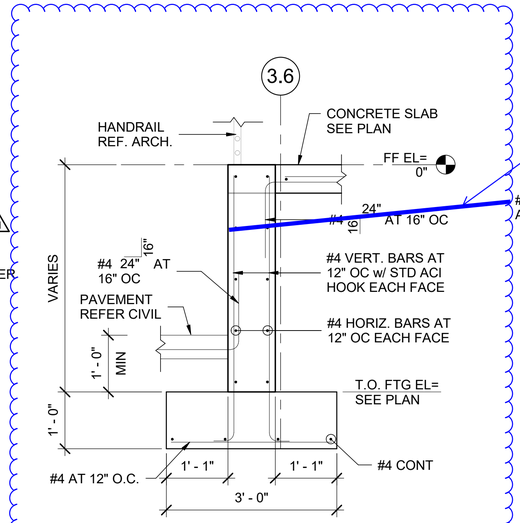

3 TYPICAL EXTERIOR FOUNDATION SECTION
3/4" = 1'-0"

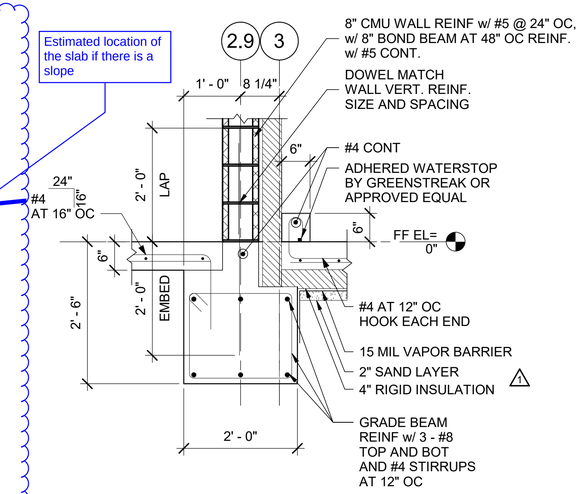

4 TYPICAL INTERIOR GRADE BEAM SECTION AT COLD STORAGE
3/4" = 1'-0"

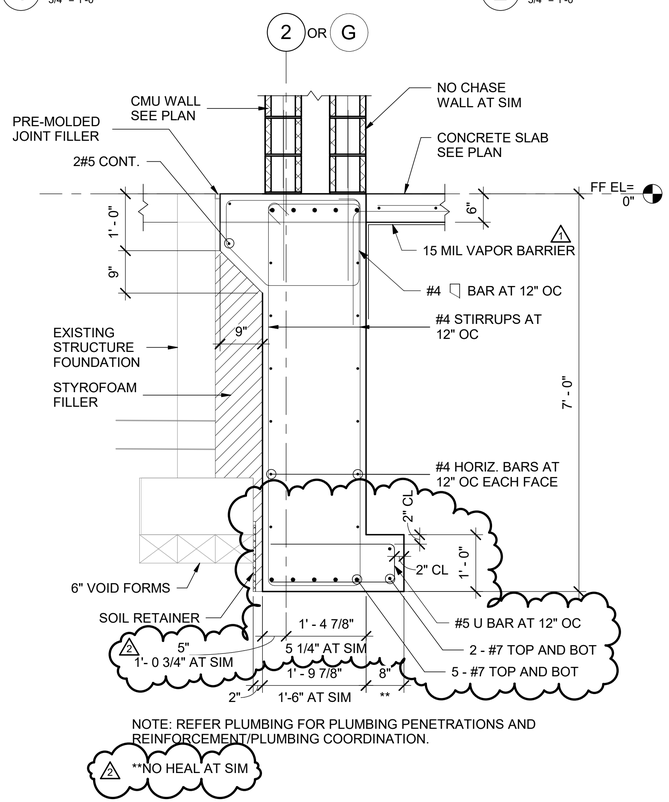

5 EXTERIOR FOUNDATION SECTION AT CHASE
3/4" = 1'-0"

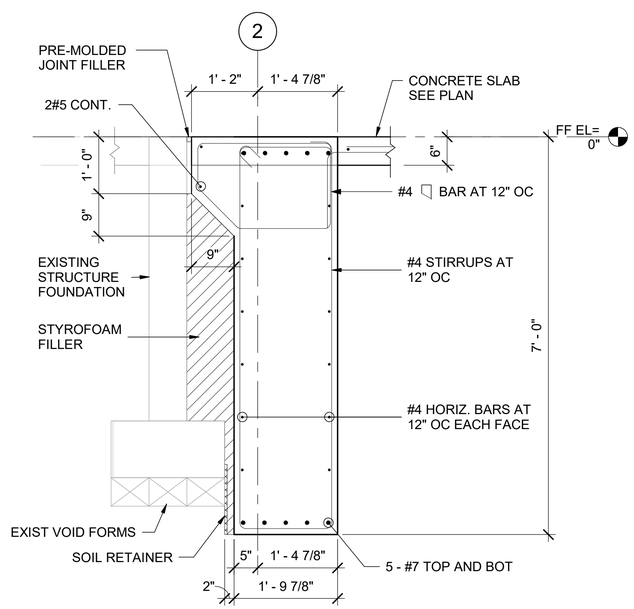

6 EXTERIOR FOUNDATION SECTION EXISTING BUILDING
3/4" = 1'-0"

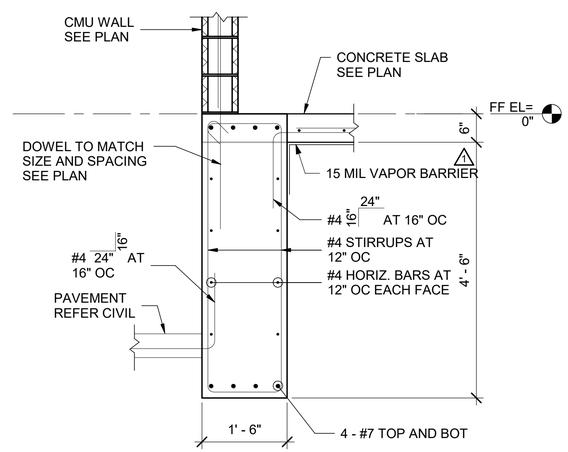

7 EXTERIOR FOUNDATION SECTION AT MECHANICAL YARD
3/4" = 1'-0"

halff

April 11, 2025
57325.002

ASI 005.1
Pharr FY16 DAP - Agricultural Lab, Dock Expansion I & II
City of Phar
GSA & CBP
TxDOT

This Modification shall be considered part of the Bidding/Construction Documents and is issued to change, amplify, add to, delete from, or otherwise explain the plans and specifications. Where provisions of this Modification differ from those of the original Bidding/Construction Documents, this Modification shall take precedence over the original plans and specifications and shall govern.

CONSTRUCTION DOCUMENT SHEETS

S-102
- Modify footing along grid 2 between grids G.3 and H per concrete reinforcement submittal response.
- Addition of detail for interior grade beam at double CMU wall (5/S-308).
- Addition of detail for concrete pilaster at cold storage (6/S-308), typical at exterior corners of cold storage loading dock.
- Addition of dimensions per contractor request.
- Addition of detail Foundation Detail (6/S-307) at interior demising wall as requested by contractor.

S-103
- Addition of detail for concrete pilaster at cold storage (6/S-308), typical at exterior corners of cold storage loading dock.
- Addition of dimensions per contractor request.
- Addition of detail Foundation Detail (6/S-307) at interior demising wall as requested by contractor.

S-104
- Addition of detail for concrete pilaster at cold storage (6/S-308), typical at exterior corners of cold storage loading dock.
- Addition of dimensions per contractor request.
- Addition of detail Foundation Detail (6/S-307) at interior demising wall as requested by contractor.

S-303
- Addition of heel in detail 5.

S-304
- Addition of dimensions on details 1/S-304 and 2/S-304 per contractor request.

S-306
- Addition of heel in detail 5/S-306.

S-307
- Addition of detail 6/S-307 for clarity per contractor request.
- Addition of dimensions on detail 4/S-307 per contractor request.

S-308
- Addition of details 5, 6 and 7.

No.	Date	Description
1	06/13/2024	ASI 001
2	04/11/2025	ASI 005.1

THE SEAL APPEARING ON THIS DOCUMENT WAS AUTHORIZED BY:
NAME: JAMES C. VESTER
PE #: 128858
DATE: 04/11/2025
ALTERATION OF A SEALED DOCUMENT WITHOUT PROPER NOTIFICATION TO THE ENGINEER OF RECORD IS AN OFFENSE UNDER THE RULES AND REGULATIONS OF THE TEXAS BOARD OF PROFESSIONAL ENGINEERS. THE RECORD COPY OF THIS DRAWING IS ON FILE AT THE OFFICES OF HALFF ASSOCIATES, INC., 4000 FOSSIL CREEK BLVD., FORT WORTH, TEXAS 76078.

STATE OF TEXAS
JAMES C. VESTER
128858
LICENSED
PROFESSIONAL ENGINEER
04/11/2025

AVO# 33135

Pharr
CITY OF PHARR, TEXAS

GSA
GENERAL SERVICES ADMINISTRATION
819 TAYLOR STREET
FORT WORTH, TEXAS 76102-6195
817-978-3334
www.gsa.gov

©2018
TEXAS DEPARTMENT OF TRANSPORTATION

HALFF
5000 WEST MILITARY, SUITE 100, McALLEN, TEXAS 78503
TEL (956) 664-0286 FAX (956) 664-0282 TBPE FIRM #F-312

PHARR FY16 DAP - IMPORT DOCK AND AG LAB IMPROVEMENTS

FOUNDATION DETAILS

SCALE: AS NOTED	SHEET OF			
DN:	CONT	SECT	JOB	HIGHWAY
CK DN:	921	02	424,425,433	PHARR INT. BRIDGE
DW:	DIST		COUNTY	SHEET NO.
CK DW:	PHR		HIDALGO	S-303
TR:				
CK TR:				

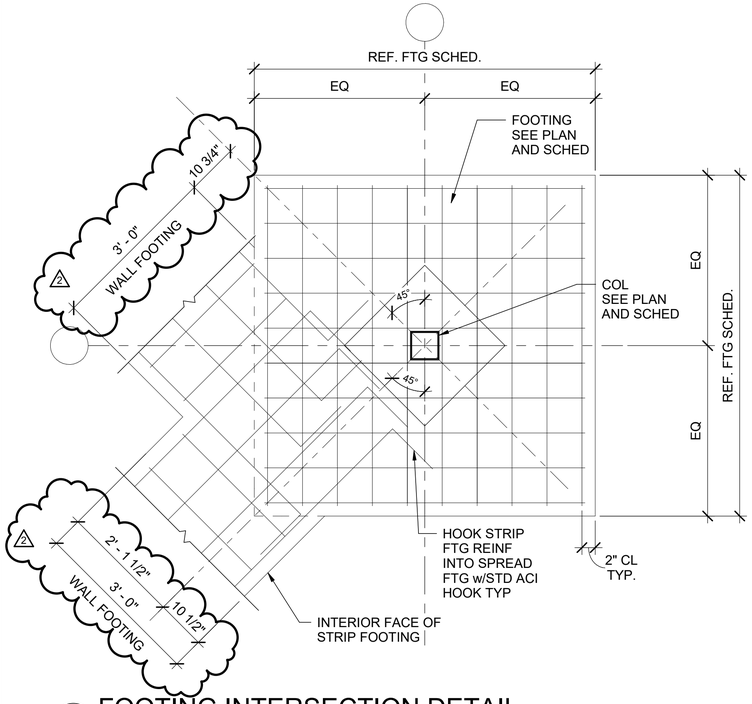

1 FOOTING INTERSECTION DETAIL
3/4" = 1'-0"

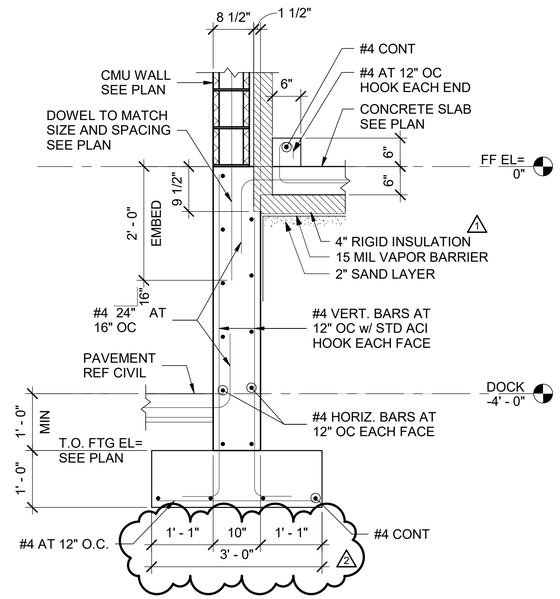

2 TYPICAL EXTERIOR FOUNDATION AT COLD STORAGE
3/4" = 1'-0"

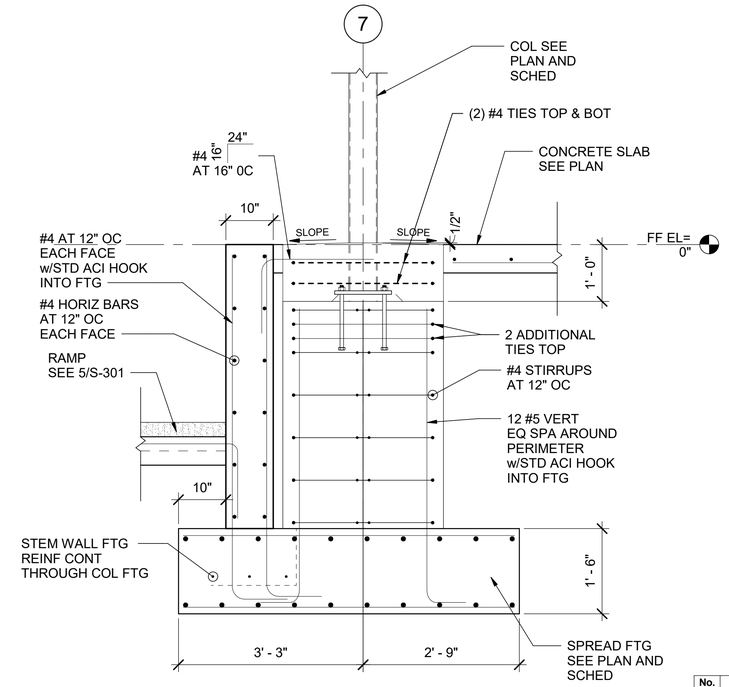

3 FOOTING SECTION AT RAMP
3/4" = 1'-0"

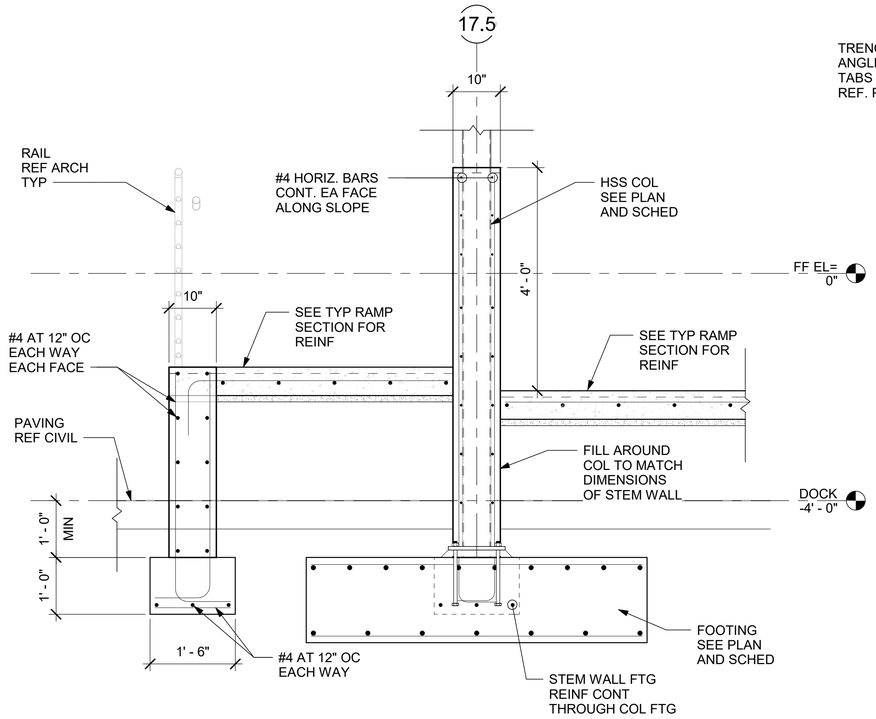

4 CANOPY FOOTING SECTION AT RAMPS
3/4" = 1'-0"

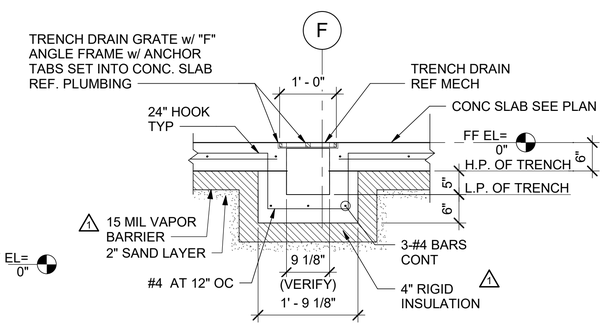

5 SECTION AT TRENCH DRAIN
3/4" = 1'-0"

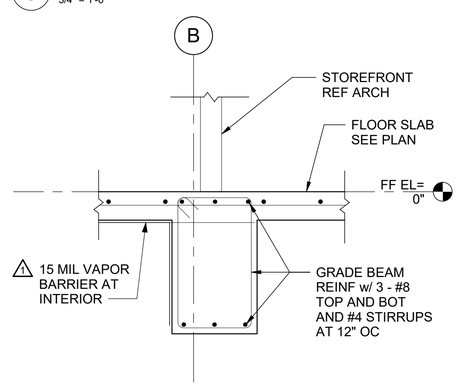

6 SECTION AT LAB ENTRY
3/4" = 1'-0"

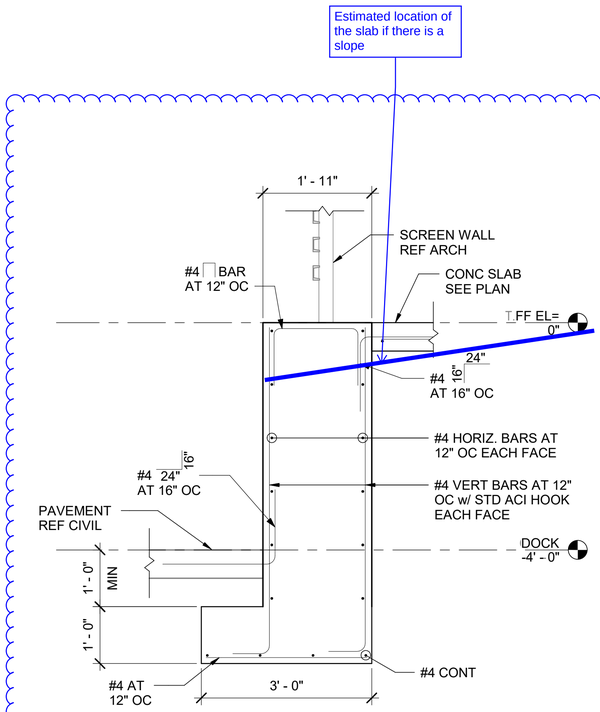

7 SECTION AT SCREEN WALL POST
3/4" = 1'-0"

AVO# 33135

halff

April 11, 2025
57325.002

ASI 005.1
Pharr FY16 DAP - Agricultural Lab, Dock Expansion I & II
City of Pharr
GSA & CBP
TxDOT

This Modification shall be considered part of the Bidding/Construction Documents and is issued to change, amplify, add to, delete from, or otherwise explain the plans and specifications. Where provisions of this Modification differ from those of the original Bidding/Construction Documents, this Modification shall take precedence over the original plans and specifications and shall govern.

CONSTRUCTION DOCUMENT SHEETS

S-102
- Modify footing along grid 2 between grids G.3 and H per concrete reinforcement submittal response.
- Addition of detail for interior grade beam at double CMU wall (S/S-308).
- Addition of detail for concrete pilaster at cold storage (6/S-308), typical at exterior corners of cold storage loading dock.
- Addition of dimensions per contractor request.
- Addition of detail Foundation Detail (6/S-307) at interior demising wall as requested by contractor.

S-103
- Addition of detail for concrete pilaster at cold storage (6/S-308), typical at exterior corners of cold storage loading dock.
- Addition of dimensions per contractor request.
- Addition of detail Foundation Detail (6/S-307) at interior demising wall as requested by contractor.

S-104
- Addition of detail for concrete pilaster at cold storage (6/S-308), typical at exterior corners of cold storage loading dock.
- Addition of dimensions per contractor request.
- Addition of detail Foundation Detail (6/S-307) at interior demising wall as requested by contractor.

S-303
- Addition of heel in detail 5.

S-304
- Addition of dimensions on details 1/S-304 and 2/S-304 per contractor request.

S-306
- Addition of heel in detail 5/S-306.

S-307
- Addition of detail 6/S-307 for clarity per contractor request.
- Addition of dimensions on detail 4/S-307 per contractor request.

S-308
- Addition of details 5, 6 and 7.

No.	Date	Description
1	06/13/2024	ASI 001
2	04/11/2025	ASI 005.1

THE SEAL APPEARING ON THIS DOCUMENT WAS AUTHORIZED BY:
NAME: JAMES C. VESTER
PE #: 128858
DATE: 04/11/2025
ALTERATION OF A SEALED DOCUMENT WITHOUT PROPER NOTIFICATION TO THE ENGINEER OF RECORD IS AN OFFENSE UNDER THE RULES AND REGULATIONS OF THE TEXAS BOARD OF PROFESSIONAL ENGINEERS. THE RECORD COPY OF THIS DRAWING IS ON FILE AT THE OFFICES OF HALFF ASSOCIATES, INC., 4000 FOSSIL CREEK BLVD., FORT WORTH, TEXAS 76078.

AVO# 33135

Pharr
CITY OF PHARR, TEXAS

GSA
GENERAL SERVICES ADMINISTRATION
819 TAYLOR STREET
FORT WORTH, TEXAS 76102-6195
817-978-3334
www.gsa.gov

© 2018
TEXAS DEPARTMENT OF TRANSPORTATION

HALFF
5000 WEST MILITARY, SUITE 100, McALLEN, TEXAS 78503
TEL (956) 664-0286 FAX (956) 664-0282 TBPE FIRM #F-312

PHARR FY16 DAP - IMPORT DOCK AND AG LAB IMPROVEMENTS

FOUNDATION DETAILS

SCALE: AS NOTED			SHEET OF	
DN:	CONT	SECT	JOB	HIGHWAY
CK DN:	921	02	424,425,433	PHARR INT. BRIDGE
DW:	DIST		COUNTY	SHEET NO.
CK DW:	PHR		HIDALGO	S-304
TR:				
CK TR:				

AVO# 33135

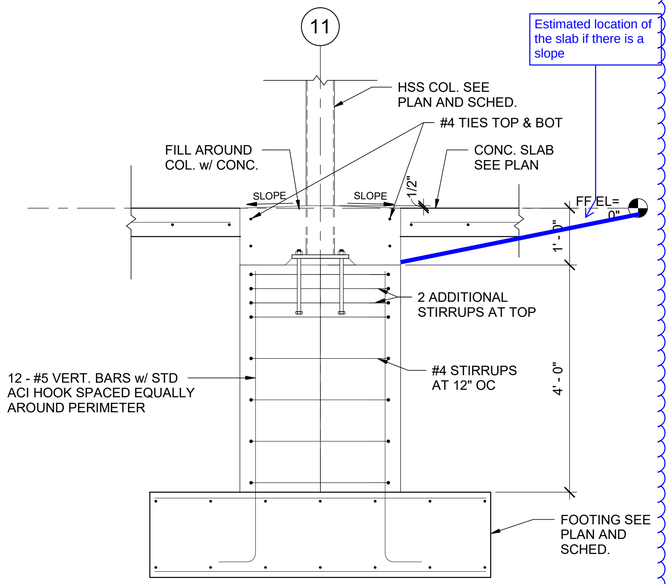

1 TYPICAL COLUMN PEDESTAL
3/4" = 1'-0"

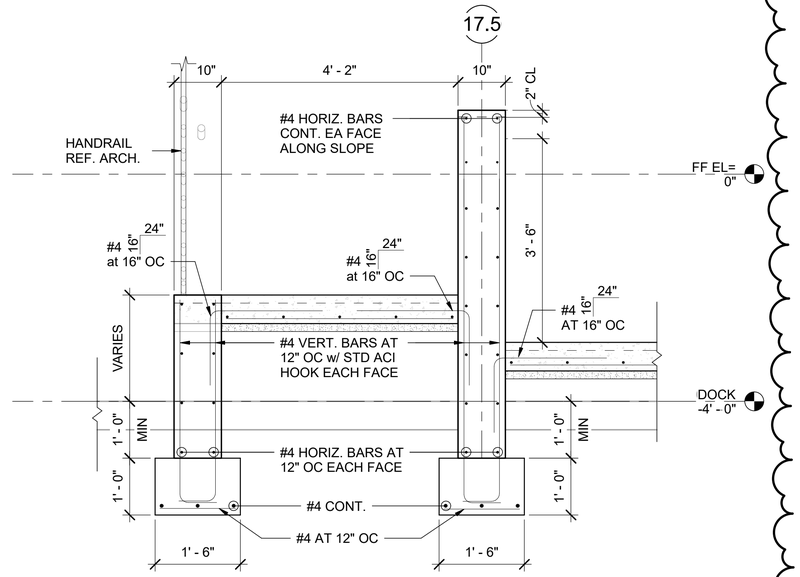

2 SOUTH RAMP SECTION
3/4" = 1'-0"

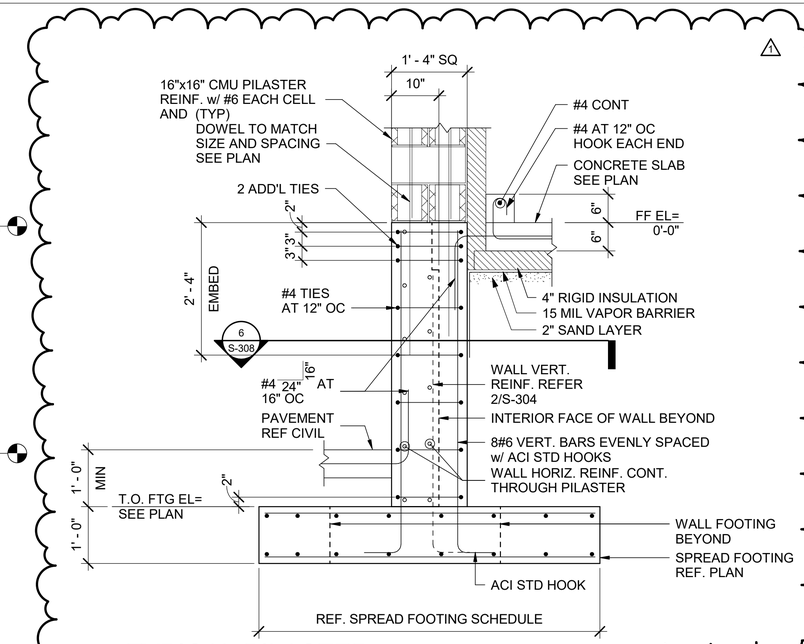

TYPICAL PILASTER SECTION AT COLD STORAGE
7 3/4" = 1'-0"

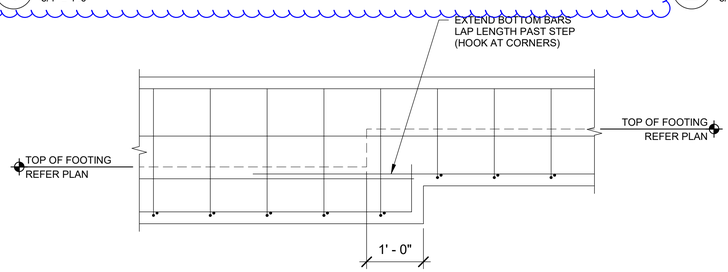

3 TYPICAL BEAM STEP DETAIL
3/4" = 1'-0"

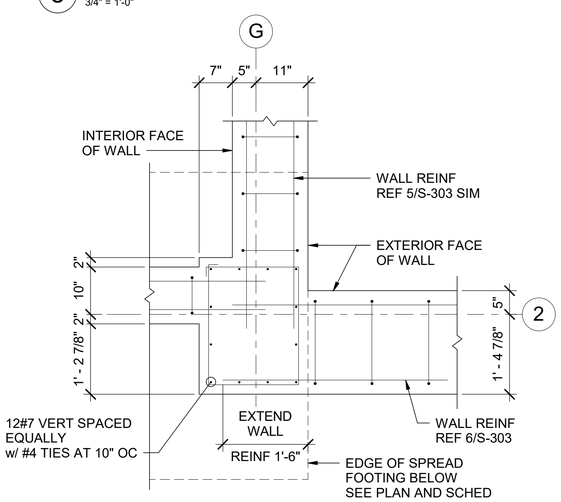

4 FOUNDATION DETAIL AT GRID G-2
3/4" = 1'-0"

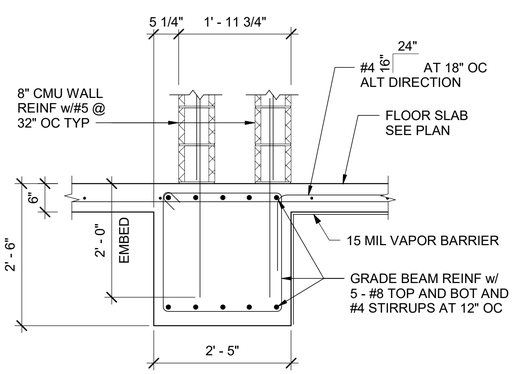

INTERIOR GRADE BEAM SECTION AT DOUBLE CMU WALL
5 3/4" = 1'-0"

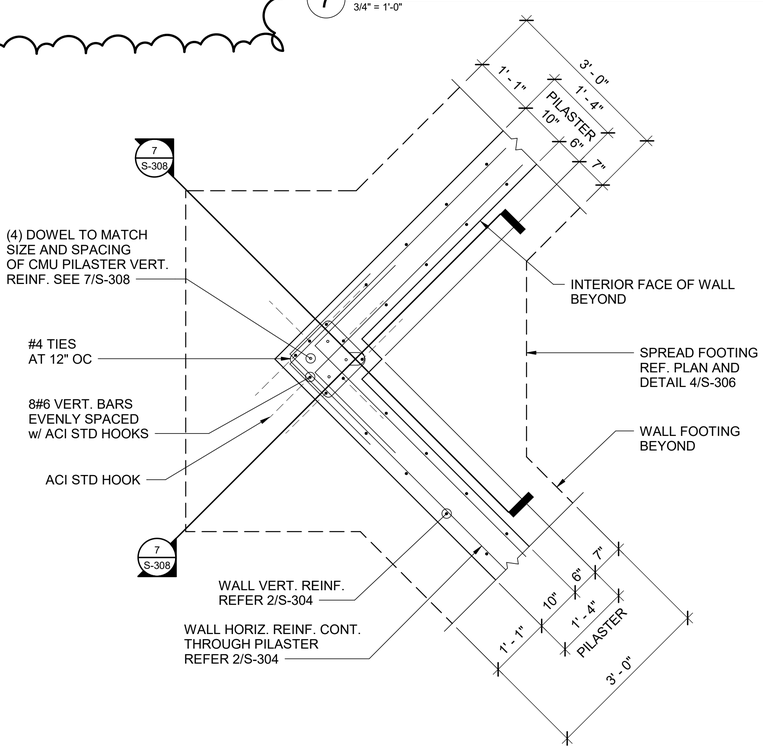

TYPICAL PILASTER PLAN AT COLD STORAGE
6 3/4" = 1'-0"

No.	Date	Description
1	04/11/2025	ASI 005.1

THE SEAL APPEARING ON THIS DOCUMENT WAS AUTHORIZED BY:
NAME: JAMES C. VESTER
PE #: 128858
DATE: 04/11/2025
ALTERATION OF A SEALED DOCUMENT WITHOUT PROPER NOTIFICATION TO THE ENGINEER OF RECORD IS AN OFFENSE UNDER THE RULES AND REGULATIONS OF THE TEXAS BOARD OF PROFESSIONAL ENGINEERS. THE RECORD COPY OF THIS DRAWING IS ON FILE AT THE OFFICES OF HALFF ASSOCIATES, INC., 4000 FOSSIL CREEK BLVD., FORT WORTH, TEXAS 76078.

STATE OF TEXAS
JAMES C. VESTER
128858
LICENSED PROFESSIONAL ENGINEER
04/11/2025

AVO# 33135

Pharr
CITY OF PHARR, TEXAS

GSA
GENERAL SERVICES ADMINISTRATION
819 TAYLOR STREET
FORT WORTH, TEXAS 76102-6195
817-978-3334
www.gsa.gov

©2018
TEXAS DEPARTMENT OF TRANSPORTATION

HALFF
5000 WEST MILITARY, SUITE 100, McALLEN, TEXAS 78503
TEL (956) 664-0286 FAX (956) 664-0282 TBPE FIRM #F-312

PHARR FY16 DAP - IMPORT DOCK AND AG LAB IMPROVEMENTS

FOUNDATION DETAILS

SCALE: AS NOTED			SHEET OF	
DN:	CONT	SECT	JOB	HIGHWAY
CK DN:	921	02	424,425,433	PHARR INT. BRIDGE
DW:	DIST		COUNTY	SHEET NO.
CK DW:	PHR		HIDALGO	S-308
TR:				
CK TR:				

PCO #021

D. Wilson Construction
PO Box 3455
McAllen, Texas 78502
Phone: (956) 686-9573

Project: 24-235 - Pharr FY16 DAP-Agricultural Lab, Dock Expansion I & II
9901 S Cage Blvd
Pharr, Texas 78577

DRAFT

Prime Contract Potential Change Order #021: Delay Days

TO:	City Of Pharr PO Box 1729 Pharr, Texas 78577	**FROM:**	D Wilson Construction Company PO Box 3455 McAllen, Texas 78502
PCO NUMBER/REVISION:	021 / 0	**CONTRACT:**	24-235 - City of Pharr Dock Expansion
REQUEST RECEIVED FROM:	Claudio Velasco **(D Wilson Construction Company)**	**CREATED BY:**	Pilar Anzaldua-Garza **(D Wilson Construction Company)**
STATUS:	Draft	**CREATED DATE:**	7/31/2025
REFERENCE:	Delay Days	**PRIME CONTRACT CHANGE ORDER:**	None
EXECUTED:	No	**SIGNED CHANGE ORDER RECEIVED DATE:**	
SCHEDULE IMPACT:	45 days	**TOTAL AMOUNT:**	$0.00

POTENTIAL CHANGE ORDER TITLE: Delay Days

CHANGE REASON: Existing Condition

45 calendar days approved. Equivalent to **30 working days**

POTENTIAL CHANGE ORDER DESCRIPTION: *(The Contract Is Changed As Follows)*
Delay Days
We submit the following following days as lost to unforeseen conditions:

Project Delay Summary – Through July 2025

1. Owner Change Order Impact
   - Change Proposal 17 - An Owner-directed change order affecting the dry dock retaining wall concrete scope resulted in eleven (11) delay days. (original impact: 14 Days)

2. Approved Change Proposals
   - Change Proposal 05 (Revised): Provide electrical service to the TxDOT canopy (original impact: 19 days).
   - Change Proposal 12 Rev 3: MVEC primary power and transformer work (original impact: 24 days).
   - Total days for these two items = 43 Days.

3. Negotiated Schedule Impact
   - The power-related scope, CP 05-(TxDOT canopy and MVEC transformer work) is the primary driver of delays.
   - Instead of adding the full 57 days from Change Proposals 05, 12 and 17 the combined negotiated delay is capped at 45 calendar days.
   - This single adjustment encompasses change proposal for delays.

Summary of Adjusted Schedule ….(Refer to exhibit A)

- **Original cumulative delays (changes):** 14 + 43 = 57 days
- **DWCC willing to Negotiate final extension of days based on the provided construction schedules : 45 calendar days**

PCO #021

ATTACHMENTS:

#	Budget Code	Description	Amount
		Subtotal:	**$0.00**
		Overhead and Profit (5.00% Includes Cost Type (20)):	$0.00
		Bond (1.00% Applies to All Line Items):	$0.00
		Grand Total:	**$0.00**

Brownstone Consultants, LLC
P.O. Box 3898
McAllen, Texas 78505

08/06/2025
SIGNATURE **DATE**

City Of Pharr
PO Box 1729
Pharr, Texas 78577

8/6/2025
SIGNATURE **DATE**

D Wilson Construction Company
PO Box 3455
McAllen, Texas 78502

SIGNATURE **DATE**

PROJECT TIME EXTENSION REQUEST FORM

To be submitted as a Change Proposal for Actual Delays (Excludes Rain Days)

Project Information

Project Name:	Pharr FY16 DAP Ag Lab, Ph I & II
Project Number:	0921-02-424, 425 & 433
Contractor:	D Wilson Construction Company
Submitted By:	Claudio Velasco
Date of Submission:	7/31/2025

1. Description of Additional Scope of Work

Scope of Work that caused the delay:

- Project Delay Summary – April Through July 2025

  1. Owner Change Order Impact
     - Change Proposal 17 - An Owner-directed change order affecting the dry dock retaining wall concrete scope resulted in eleven (11) delay days. (original impact: 14 Days)

  2. Approved Change Proposals
     - Change Proposal 05 (Revised): Provide electrical service to the TxDOT canopy (original impact: 19 days).
     - Change Proposal 12 Rev 3: MVEC primary power and transformer work (original impact: 24 days).
     - Total days for these two items = 43 Days.

  3. Negotiated Schedule Impact
     - The power-related scope, CP 05-(TxDOT canopy and MVEC transformer work) is the primary driver of delays.
     - Instead of adding the full 43 days from Change Proposals 05 and 12, the combined negotiated delay is capped at 45 calendar days.
     - This single adjustment encompasses change proposal for delays.

     Summary of Adjusted Schedule ….(Refer to exhibit A)

     - Original cumulative delays (changes): 14 + 43 = 57 days
     - DWCC willing to Negotiate final extension of days based on the provided construction schedules : 45 calendar days

2. Dates Affected

Start of Delay:	Refer to above narrative
End of Delay:	Refer to above narrative
Total Working Days Lost:	57
Working Days Requested for Extension:	45

Note: This request does not include rain days, weekends, or holidays already accounted for in the contract time statement.

3. Justification and Impact on Schedule

Describe how the added scope affected the project timeline. Include specific activities delayed or interrupted: (see below schedules dates), (Calendar days snipets calculation)

ORIGINAL BASELINE DATES:…….

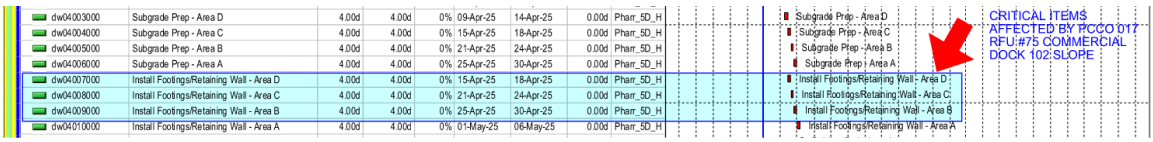

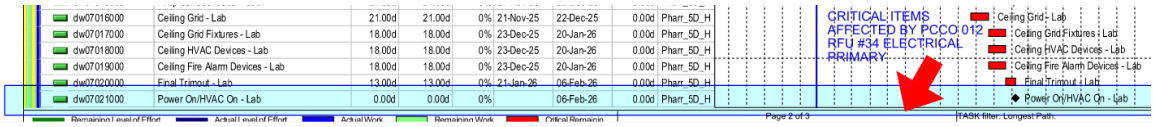

JUNE UPDATE DATES:…….

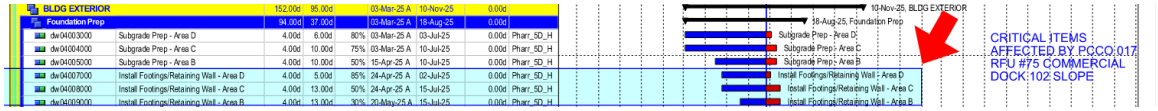

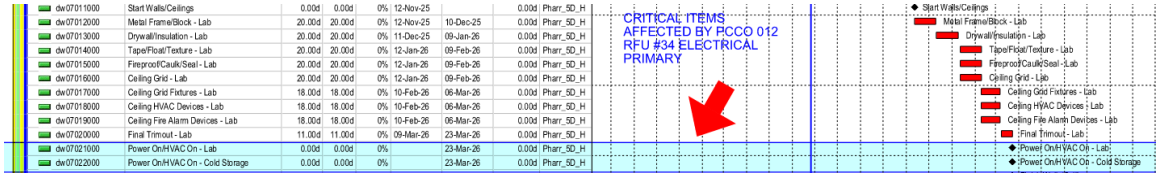

4. Backup Documentation Checklist

- [x] Daily activity logs
- [x] Photos of impacted work areas
- [x] Correspondence or meeting notes, see Change Proposals
- [x] Updated project schedule showing delay impact

5. Certification and Acknowledgment

I certify that the information provided is true and accurate to the best of my knowledge and that only actual, non-weather-related delays are included in this request.

Submitted by (Contractor PM):

Name: Claudio Velasco

Signature: _____

Date: 7/31/2025

Reviewed by (Construction Manager):

Name: _____

Signature: _____

Date: _____

FOR INTERNAL USE ONLY

City Review Notes:

City Action Taken:

☐ Approved ☐ Denied ☐ Pending Review

Approved Working Days: _____

Date of Approval: _____

Reviewed by: _____

3. Approved Potential Change Orders

#	Title	Date Initiated	Status	Schedule Impact	Total
001	RFI 01 - Estimated Quantities	11/25/24	Pending - Proceeding	0 days	$0.00
002	RFI #4: Item 7017-6002 Correction	12/10/24	Pending - Proceeding	0 days	$0.00
003 Rev 3	RFI #7: Jackbore 14" Casing	01/14/25	Pending - Proceeding	0 days	$6,380.97
005 R	RFI 26 Existing.Electrical to TDOT Canopy	03/13/25	Pending - Proceeding	19 days	$62,346.80
006 R	Change basis of design RTUs 2 & 3	06/05/25	Draft	0 days	($18,512.00)
010	VE Credit: PVC vs. Cast Iron UG @ Slab	03/18/25	Pending - Proceeding	0 days	($25,600.00)
011	CE #020 - Omit Chain Link Femcing in its entirelty	05/12/25	Draft	0 days	($88,508.00)
012 REV3	RFI #34: Electrical Primary	05/19/25	Draft	24 days	$92,503.84
013	Construction Exit Savings	05/13/25	Draft	0 days	($14,383.00)
014	ASI 01 Credit for Gas Changes	05/19/25	Draft	0 days	($11,811.24)
016	Omit Building Plaque	07/07/25	Draft	0 days	($3,860.00)
017	CE #026 - RFI 75 - Commercial Dock 102 Slope	07/14/25	Draft	14 days	$24,278.03
			Totals:	57 days	$22,835.40

Help

PCO #005 R

D. Wilson Construction
PO Box 3455
McAllen, Texas 78502
Phone: (956) 686-9573

Project: 24-235 - Pharr FY16 DAP - Agricultural Lab, Dock Expansion I & II
9901 S Cage Blvd
Pharr, Texas 78577

Prime Contract Potential Change Order #005 R: RFI 26 Existing.Electrical to TDOT Canopy

TO:	City Of Pharr PO Box 1729 Pharr, Texas 78577	**FROM:**	D Wilson Construction Company PO Box 3455 McAllen, Texas 78502
PCO NUMBER/REVISION:	005 R / 1	**CONTRACT:**	24-235 - City of Pharr Dock Expansion
REQUEST RECEIVED FROM:	Leo Vela **(D & F Industries, Inc.)**	**CREATED BY:**	Pilar Anzaldua-Garza **(D Wilson Construction Company)**
STATUS:	Pending - In Review	**CREATED DATE:**	3/13/2025
REFERENCE:	RFI 26	**PRIME CONTRACT CHANGE ORDER:**	None
EXECUTED:	No	**SIGNED CHANGE ORDER RECEIVED DATE:**	
SCHEDULE IMPACT:	19 days	**TOTAL AMOUNT:**	$62,346.80

POTENTIAL CHANGE ORDER TITLE: RFI 26 Existing.Electrical to TDOT Canopy

CHANGE REASON: Existing Condition

POTENTIAL CHANGE ORDER DESCRIPTION: *(The Contract Is Changed As Follows)*
CE #010 - RFI 26: Existing Electrical to TxDOT Canopy
We gladly submit this cost proposal to remove and relocate existing electrical line (concrete encased) that was discovered on the GPR Survey which services the TxDOT Canopy.
As per the response to RFI 26 below:

1. The new section (shown as a blue line in the attached snapshot) of the existing concrete-encase two (2) 4” conduits electrical line shall have the same standard concrete-encase. Additionally, this new section shall comply with the ANSI Load rating for vehicular traffic (worse-case-scenario Tier rating).
2. Additional manholes shall be installed in such a way that between two manholes (new or existing) there are no more than two deflections in the power line path.
3. The existing electrical line #4/0AWG low voltage conductors shall be insulation tested once they are completely reinstalled and before reconnecting them on both ends. Compare insulation test results with recorded ones or follow and comply the NFPA 70E, NESC C2-2023 (IEEE) standards. The existing electrical line #4/0AWG low voltage conductors shall be replaced if the insulation test results are unsatisfactory.
4. Once the electrical line is rerouted, the existing electrical line and ductbank will remain in place, however, all non-used wires and conductors must be removed and handed over to the Owner, and conduit caps are to be furnished and installed on all non-used stub ups (ends)

ATTACHMENTS:

#	Budget Code	Description	Amount
1	001.16-100.S	RFI 26 - Provide and install conduit, conductors and miscellaneous fittings to reroute the existing conduits as stated in response to RFIf 26. Excludes concrete, rebar and backfilling. Refer to backup for breakdown.	$50,754.00
2	001.02-105.S	RFI 26 - Provide labor to install rebar and place concrete at new concrete encasement, backfill and compact areas.	$5,000.00
3	112.03-200.M	RFI 26 - Provide additional rebar (stirfups) for concrete encasement of rerouted electrical lines for TXDot Canopy.	$525.00
4	001.03-075.M	RFI 26 - Provide red dye for concrete encasement of rerouted electrical lines for TXDot Canopy. - 5 Buckets	$250.00

PCO #005 R

#	Budget Code	Description	Amount
5	001.03-070.M	RFI 26 - Provide additional 17 CY concrete mix for concrete encasement of new conduit. 17 CY	$2,261.00
		Subtotal:	**$58,790.00**
		DWC Fee (5.00% Includes Cost Type (20)):	$2,939.50
		Bond (1.00% Applies to All Line Items):	$617.30
		Grand Total:	**$62,346.80**

Brownstone Consultants, LLC
P.O. Box 3898
McAllen, Texas 78505

04/25/2025
SIGNATURE **DATE**

City Of Pharr
PO Box 1729
Pharr, Texas 78577

Maria Luisa Rangel
SIGNATURE 05/05/2025 **DATE**

D Wilson Construction Company
PO Box 3455
McAllen, Texas 78502

SIGNATURE **DATE**

PCO #012 REV3

D. Wilson Construction
PO Box 3455
McAllen, Texas 78502
Phone: (956) 686-9573

Project: 24-235 - Pharr FY16 DAP-Agricultural Lab, Dock Expansion I & II
9901 S Cage Blvd
Pharr, Texas 78577

DRAFT

Prime Contract Potential Change Order #012 REV3: RFI #34: Electrical Primary

TO:	City Of Pharr PO Box 1729 Pharr, Texas 78577	**FROM:**	D Wilson Construction Company PO Box 3455 McAllen, Texas 78502
PCO NUMBER/REVISION:	012 REV3 / 3	**CONTRACT:**	24-235 - City of Pharr Dock Expansion
REQUEST RECEIVED FROM:	Leo Vela **(D & F Industries, Inc.)**	**CREATED BY:**	Pilar Anzaldua-Garza **(D Wilson Construction Company)**
STATUS:	Draft	**CREATED DATE:**	5/19/2025 / Rev 3- 7/17/25
REFERENCE:	RFI 34 - ASI 03	**PRIME CONTRACT CHANGE ORDER:**	None
EXECUTED:	No	**SIGNED CHANGE ORDER RECEIVED DATE:**	
SCHEDULE IMPACT:	TBD	**TOTAL AMOUNT:**	$92,503.84

POTENTIAL CHANGE ORDER TITLE: RFI #34: Electrical Primary

CHANGE REASON: Design Development

POTENTIAL CHANGE ORDER DESCRIPTION: *(The Contract Is Changed As Follows)*
CE #013 - #34: Electrical Primary Service
Sheet E-601 shows a new MVEC Utility Transformer UT-3 being served from existing Utility Transformer UT-2. In coordinating with MVEC, they determined that the existing utility line serving UT-2 does not have the capacity to carry the added load. In addition, the new utility transformer has a current lead time of close to a year. MVEC is proposing to serve the project with (2) transformers and a new utility vault. The (2) proposed transformers are currently in MVEC yard; which can be designated for this project. For your review, attached is the MVEC Proposed Service, Sheet E-601 Electrical One Line Diagram, and the Utility Yard coordination shop drawing. Please have the A/E/O team review this installation.
In response to RFI 34 and ASI 03 (MVEC Primary Service), we propose to provide and install conduit and miscellaneous fittings to route the new MVEC required primary conduit as stated in RFI 34 response (attached).
This scope is also included in ASI 03 - however, this proposal refers only to the Electrical Primary portion of ASI 03. Any other changes not specifically listed here are excluded.
This proposal revised to reflect 1 ea 4" conduit as requested by MVEC (Freddy Ayala). Encasement will be 8" to accommodate the 1 ea 4"conduit and spacers , and fiber reinforced concrete mix. Proposal is valid for 15 days.

ATTACHMENTS:
ASI 003 REV.2 - RFI 34 & 37.pdf

#	Budget Code	Description	Amount
1	001.16-100.S	Provide and install conduit and miscellaneous fittings to route the new MVEC required primary conduit as stated in ASI 03 - RFI 34 response.	$64,058.14
2	001.02-050.S	Concrete Encasement of new electrical primary, prep of moisture conditioned cement stabilized sand, prep and compact conditioned native soil, compact and backfill as per ASI 003.	$17,600.49
3	001.03-075.M	Red Dye for concrete encasement	$750.00
4	001.03-070.M	Fiber Reinforced Concrete Mix for new concrete encasement - 33 CY @ 146/cy	$4,818.00
		Subtotal:	**$87,226.63**
		Overhead and Profit (5.00% Includes Cost Type (20)):	$4,361.33
		Bond (1.00% Applies to All Line Items):	$915.88
		Grand Total:	**$92,503.84**

Brownstone Consultants, LLC	City Of Pharr	D Wilson Construction Company
P.O. Box 3898	PO Box 1729	PO Box 3455
McAllen, Texas 78505	Pharr, Texas 78577	McAllen, Texas 78502
07/17/2025	7/21/2025	
SIGNATURE DATE	SIGNATURE DATE	SIGNATURE DATE

PCO #017

D. Wilson Construction
PO Box 3455
McAllen, Texas 78502
Phone: (956) 686-9573

Project: 24-235 - Pharr FY16 DAP-Agricultural Lab, Dock Expansion I & II
9901 S Cage Blvd
Pharr, Texas 78577

DRAFT

Prime Contract Potential Change Order #017: CE #026 - RFI 75 - Commercial Dock 102 Slope

TO:	City Of Pharr PO Box 1729 Pharr, Texas 78577	**FROM:**	D Wilson Construction Company PO Box 3455 McAllen, Texas 78502
PCO NUMBER/REVISION:	017 / 0	**CONTRACT:**	24-235 - City of Pharr Dock Expansion
REQUEST RECEIVED FROM:	Rolando Ayala **(Brownstone Consultants, LLC)**	**CREATED BY:**	Pilar Anzaldua-Garza **(D Wilson Construction Company)**
STATUS:	Draft	**CREATED DATE:**	7/14/2025
REFERENCE:	RFI 75	**PRIME CONTRACT CHANGE ORDER:**	None
EXECUTED:	No	**SIGNED CHANGE ORDER RECEIVED DATE:**	
SCHEDULE IMPACT:	14 days	**TOTAL AMOUNT:**	$24,278.03

POTENTIAL CHANGE ORDER TITLE: CE #026 - RFI 75 - Commercial Dock 102 Slope

CHANGE REASON: Client Request

POTENTIAL CHANGE ORDER DESCRIPTION: *(The Contract Is Changed As Follows)*

CE #026 - RFI 75 - Commercial Dock 102 Slope
Slope will be required for a portion of Room 102 (Commercial Secondary). Approximately 40 feet of the concrete dock of Room 102 (Commercial Secondary) is to be sloped downward at 1/16" towards the eastern dock edge. As a result, the dock edge would be lowered 2-1/2". This will result in the concrete pavement being lowered by 2-1/2" to maintain the required minimum dock height of 48". Please refer to the provided exhibit, which illustrates this response. An ASI will be issued with revised Civil, Architectural, and Structural drawings to memorialize this modification.

ATTACHMENTS:

RFI 75 COVER.pdf

#	Budget Code	Description	Amount
1	114.03-100.S	RFI 75 - Slope Partial Room 102 - Remove installed and cut rebar to accommodate for new slope requirement. Reinstall forms to adjusted slope as per RFI 75.	$22,893.00
		Subtotal:	**$22,893.00**
		Overhead and Profit (5.00% Includes Cost Type (20)):	$1,144.65
		Bond (1.00% Applies to All Line Items):	$240.38
		Grand Total:	**$24,278.03**

Brownstone Consultants, LLC
P.O. Box 3898
McAllen, Texas 78505

City Of Pharr
PO Box 1729
Pharr, Texas 78577

D Wilson Construction Company
PO Box 3455
McAllen, Texas 78502

SIGNATURE **DATE** **SIGNATURE** **DATE** **SIGNATURE** **DATE**

Pharr FY16 DAP - Dock Expansion

Job # **2324-71-510-C08-406**
Update Date 7/31/2025

Calendar days: 618
Working days (excluding weekends and federal holid

Project Start Date: 11/4/2024
Original Substantial Completion Date: 7/15/2026
Current Substantial Completion Date: 7/16/2026

Current Contract Working Days:
Working Days Counted to Contract:
Working Days Remaining to Contract:

Date	Reasons/Cause of Delay	Crtitical Path Item Delayed	Comments	Weather Delays	Holidays Day	Revised SC Date
11/11/2024	Veterans Day – November 11 (Monday)	None - Scheduled	Federal Holiday		1	
	Novemeber 2024	**Total Days for this Month**			**1**	**Wednesday, July 15, 2026**
11/28/2024	Thanksgiving Day – November 28 (Thursday)	None - Scheduled	Federal Holiday		1	
12/6/2024	Gas Line - Emergency Shutdown	Concrete Demo	Fire LT - Shutdown			
12/25/2024	Christmas Day – December 25 (Wednesday)	None - Scheduled	Federal Holiday		1	
	December 2024	**Total Days for this Month**		**0**	**2**	**Thursday, July 16, 2026**
1/1/2025	New Year's Day – January 1 (Wednesday)	None - Scheduled	Federal Holiday		1	
1/14/2025	Inclement Weather	Concrete Demo	Unsafe Conditions	1		
1/15/2025	Inclement Weather	Concrete Demo	Unsafe Conditions	1		
1/20/2025	Martin Luther King Jr. Day – January 20 (Monday)	None - Scheduled	Federal Holiday		1	
1/21/2025	Inclement Weather	Concrete Demo	Unsafe Conditions	1		
1/22/2025	Inclement Weather	Concrete Demo	Unsafe Conditions	1		
	January 2025	**Total Days for this Month**		**4**	**2**	**Thursday, July 16, 2026**
2/17/2025	Presidents' Day – February 17 (Monday)	None - Scheduled	Federal Holiday		1	
2/21/2025	Inclement Weather	Subgrade Prep @ Building	Unsafe Conditions	1		
	February 2025	**Total Days for this Month**		**1**	**1**	**Thursday, July 16, 2026**
3/26/2025	Inclement Weather	Subgrade Prep @ Building	Unsafe Conditions	1		
3/27/2025	Inclement Weather	Subgrade Prep @ Building	Unsafe Conditions	1		
3/28/2025	Inclement Weather	Subgrade Prep @ Building	Unsafe Conditions	1		
3/31/2025	Inclement Weather	Subgrade Prep @ Building	Unsafe Conditions	1		
	March 2025	**Total Days for this Month**		**4**	**0**	
4/1/2025	Inclement Weather	Subgrade Prep @ Building	Unsafe Conditions	1		
4/2/2025	Inclement Weather	Subgrade Prep @ Building	Unsafe Conditions	1		

4/3/2025	Inclement Weather	Subgrade Prep @ Building	Unsafe Conditions	1	
4/4/2025	Inclement Weather	Subgrade Prep @ Building	Unsafe Conditions	1	
4/7/2025	Repair Damage Work	Subgrade Prep @ Building	Delay	1	
4/8/2025	Repair Damage Work	Subgrade Prep @ Building	Delay	1	
4/9/2025	Repair Damage Work	Subgrade Prep @ Building	Delay	1	
4/10/2025	Repair Damage Work	Subgrade Prep @ Building	Delay	1	
4/11/2025	Repair Damage Work	Subgrade Prep @ Building	Delay	1	
4/14/2025	Repair Damage Work	Subgrade Prep @ Building	Delay	1	
4/15/2025	Repair Damage Work	Subgrade Prep @ Building	Delay	1	
4/16/2025	Repair Damage Work	Subgrade Prep @ Building	Delay	1	
	April 2025	**Total Days for this Month**		**12**	**0**
5/1/2025	**No inclement weather for 5/1/2-25 - 5/25/2025.**			0	
5/26/2025	Memorial Day	None - Scheduled	Federal Holiday		1
5/28/2025	Inclement Weather	Building Footings	Unsafe Conditions	1	
	May 2025	**Total Days for this Month**			
				1	**1**
6/13/2025	Inclement Weather	Building Footings	Unsafe Conditions	1	
6/20/2025	Inclement Weather	Building Footings	Unsafe Conditions	1	
6/23/2025	Inclement Weather	Building Footings	Unsafe Conditions	1	
6/24/2025	Inclement Weather	Building Footings	Unsafe Conditions	1	
6/30/2025	Inclement Weather	Building Footings	Unsafe Conditions	1	
	June 2025	**Total Days for this Month**			
				5	
7/1/2025	Inclement Weather	Building Footings	Unsafe Conditions	1	
7/2/2025	Inclement Weather	Building Footings	Unsafe Conditions	1	
7/3/2025	Inclement Weather	Building Footings	Unsafe Conditions	1	
7/4/2025	July 4th - Holiday	None-Scheduled	Federal Holiday	1	
7/10/2025	Dry Dock re-wall concrete delay - Change Order by Owner_Change Order #17	Re-wall	Delay	1	
7/11/2025	Dry Dock re-wall concrete delay - Change Order by Owner_Change Order #17	Re-wall	Delay	1	
7/14/2025	Dry Dock re-wall concrete delay - Change Order by Owner_Change Order #17	Re-wall	Delay	1	
7/15/2025	Dry Dock re-wall concrete delay - Change Order by Owner_Change Order #17	Re-wall	Delay	1	

1 Owner change Order Retaining Wall PCO 17

D. WILSON CONSTRUCTION CO.

An Employee-Owned Company

July 31, 2025

Rolando Ayala
Brownstone Consultants
P.O. Box 3898
McAllen, TX 78505

Re: 24235 Pharr FY 16 DAP
9901 S Cage Blvd,
Pharr, TX 78577

Dear Mr. Ayala:

Please let this letter serve as our request for delays at the above referenced project due to the following reasons:
Delays due to **inclement weather or Other**

Delay Begin Date	Delay End Date	Lost Days	Notes
07/01/2025	07/03/2025	3	Inclement Weather Day
07/04/2025	07/04/2025	0	Federal Holiday
07/10/2025	07/24/2025	11	Dry Dock re-wall concrete delay - Change Order by Owner_Change Order #17

Total days to add to our contract: 14 days
Days previously reported (refer to current list) 22 days
Total days to include to our contract: 36 days to date

If you have any questions regarding this matter, please call me at (956) 686-9573 to discuss:

Sincerely,
D. WILSON CONSTRUCTION CO.

Accepted by: _____
Brownstone Consultants

Claudio Velasco
Project Manager

1207 East Pecan, McAllen TX, 78502-3455
Office (956) 686-9573 Fax (956) 686-3270
claudiov@dwilsonconstruction.com
www.dwilsonconstruction.com

1 Owner change Order Retaining Wall PCO 17

D. Wilson Construction

Printed on Thu Jul 31, 2025 at 04:47 pm CDT

Job #: 24-235 Pharr FY16 DAP-Agricultural Lab, Dock Expansion I & II
9901 S Cage Blvd
Pharr, Texas 78577

Description

Taken Date
07/25/2025 at 08:39 am

Uploaded By
Arturo Perez

Upload Date
07/25/2025 at 08:40 am

File Name
E4E3A305-8818-4889-B7C4-6145...

Album
2/03/25

Description

Taken Date
07/25/2025 at 08:12 am

Uploaded By
Arturo Perez

Upload Date
07/25/2025 at 09:00 am

File Name
7C5011D3-7198-44C4-9DDA-2CD...

Album
2/03/25

Description
Working on wall forms East bldg B

Taken Date
07/10/2025 at 09:11 am

Uploaded By
Isaac Moreno

Upload Date
07/10/2025 at 09:32 am

File Name
A4091C40-A07E-4674-AA24-5E8...

Album
2/03/25

Description
Working on wall forms West bldg B

Taken Date
07/10/2025 at 09:08 am

Uploaded By
Isaac Moreno

Upload Date
07/10/2025 at 09:10 am

File Name
75DFFCCD-71A6-4761-884E-706...

Album
2/03/25

5:17

Date

From	Friday, February 6, 2026
To	Monday, March 23, 2026
Include To Date	
Days	45 Days
Weeks	6 Weeks 3 Days
Months	1 Months 17 Days
Years	0 Years 45 Days
Years & Months	0 Years 1 Months 17 Days

From To Today

December	20	2023
January	21	2024
February	22	2025
March	23	2026
April	24	2027
May	25	2028
June	26	2029

Date Time Date Time Calculator Settings

5:28

Date

From	Thursday, July 23, 2026
To	Wednesday, September 2, 2026
Include To Date	
Days	41 Days
Weeks	5 Weeks 6 Days
Months	1 Months 10 Days
Years	0 Years 41 Days
Years & Months	0 Years 1 Months 10 Days

From To Today

June	30	2023
July	31	2024
August	1	2025
September	2	2026
October	3	2027
November	4	2028
December	5	2029

Date Time Date Time Calculator Settings

BASELINE SCHEDULE

FY16 DAP DOCK EXPANSION PHASE I, PHASE II, AGRICULTURAL RE-BID - Baseline | Critical Path by WBS | 232471510_Baseline, Data Date: 28-Feb-25

Activity ID	Activity Name	Original Duration	Remaining Duration	Physical % Complete	Start	Finish	Total Float	Calendar
Total		425.00d	352.00d		04-Nov-24 A	23-Jul-26	0.00d	
FY16 DAP DOCK EXPANSION PHASE I, PHASE II, & AC		425.00d	352.00d		04-Nov-24 A	23-Jul-26	0.00d	
CALCULATORS		425.00d	352.00d		04-Nov-24 A	23-Jul-26	0.00d	
dw00000010 C	NTP to Substantial Completion (workdays)	425.00d	352.00d	14%	04-Nov-24 A	23-Jul-26	0.00d	Pharr_5D_H
SUBMITTALS and PROCUREMENT		193.00d	193.00d		01-Mar-25	04-Dec-25	0.00d	
Procurement Window		193.00d	193.00d		01-Mar-25	04-Dec-25	0.00d	
dw01014000 LL	Procure/Man/Deliver Electrical (TBD)	279.00d	279.00d	0%	01-Mar-25	04-Dec-25	0.00d	Pharr_7D
dw01015000 LL	Procure/Man/Deliver HVAC (TBD)	279.00d	279.00d	0%	01-Mar-25	04-Dec-25	0.00d	Pharr_7D
dw01016000 LL	Procure/Man/Deliver Structural (TBD)	135.00d	135.00d	0%	01-Mar-25	13-Jul-25	0.00d	Pharr_7D
dw01017000 LL	Procure/Man/Deliver Cold Storage Com (TBD)	202.00d	202.00d	0%	01-Mar-25	18-Sep-25	0.00d	Pharr_7D
dw01018000 LL	Finish Submittals/Procurement	0.00d	0.00d	0%		04-Dec-25	0.00d	Pharr_7D
SITEWORK		23.00d	23.00d		03-Mar-25	02-Apr-25	0.00d	
Site Utilities/Demolition		23.00d	23.00d		03-Mar-25	02-Apr-25	0.00d	
dw03005000	Install Storm Water/Drainage Lines - C-303	18.00d	18.00d	0%	03-Mar-25	26-Mar-25	0.00d	Pharr_5D_H
dw03011000	Make Safe - Existing Utilities	5.00d	5.00d	0%	27-Mar-25	02-Apr-25	0.00d	Pharr_5D_H
BLDG EXTERIOR		118.00d	118.00d		03-Apr-25	18-Sep-25	0.00d	
Foundation Prep		72.00d	72.00d		03-Apr-25	15-Jul-25	0.00d	
dw04001000	Start Foundation Prep	0.00d	0.00d	0%	03-Apr-25		0.00d	Pharr_5D_H
dw04002000	Clear and Grub	4.00d	4.00d	0%	03-Apr-25	08-Apr-25	0.00d	Pharr_5D_H
dw04003000	Subgrade Prep - Area D	4.00d	4.00d	0%	09-Apr-25	14-Apr-25	0.00d	Pharr_5D_H
dw04004000	Subgrade Prep - Area C	4.00d	4.00d	0%	15-Apr-25	18-Apr-25	0.00d	Pharr_5D_H
dw04005000	Subgrade Prep - Area B	4.00d	4.00d	0%	21-Apr-25	24-Apr-25	0.00d	Pharr_5D_H
dw04006000	Subgrade Prep - Area A	4.00d	4.00d	0%	25-Apr-25	30-Apr-25	0.00d	Pharr_5D_H
dw04007000	Install Footings/Retaining Wall - Area D	4.00d	4.00d	0%	15-Apr-25	18-Apr-25	0.00d	Pharr_5D_H
dw04008000	Install Footings/Retaining Wall - Area C	4.00d	4.00d	0%	21-Apr-25	24-Apr-25	0.00d	Pharr_5D_H
dw04009000	Install Footings/Retaining Wall - Area B	4.00d	4.00d	0%	25-Apr-25	30-Apr-25	0.00d	Pharr_5D_H
dw04010000	Install Footings/Retaining Wall - Area A	4.00d	4.00d	0%	01-May-25	06-May-25	0.00d	Pharr_5D_H
dw04011000	Building Pad - Area A	4.00d	4.00d	0%	07-May-25	12-May-25	0.00d	Pharr_5D_H
dw04012000	Building Pad - Area B	8.00d	8.00d	0%	13-May-25	22-May-25	0.00d	Pharr_5D_H
dw04013000	Building Pad - Area C	8.00d	8.00d	0%	23-May-25	04-Jun-25	0.00d	Pharr_5D_H
dw04014000	Building Pad - Area D	8.00d	8.00d	0%	05-Jun-25	16-Jun-25	0.00d	Pharr_5D_H
dw04016000	Footing/Pedestals/Columns - Area A	8.00d	8.00d	0%	13-May-25	22-May-25	0.00d	Pharr_5D_H
dw04017000	Footing/Pedestals/Columns - Area B	8.00d	8.00d	0%	23-May-25	04-Jun-25	0.00d	Pharr_5D_H
dw04018000	Footing/Pedestals/Columns - Area C	8.00d	8.00d	0%	05-Jun-25	16-Jun-25	0.00d	Pharr_5D_H
dw04019000	Footing/Pedestals/Columns - Area D	8.00d	8.00d	0%	17-Jun-25	26-Jun-25	0.00d	Pharr_5D_H
dw04020000	Concrete Slab/Insulation - Area A	12.00d	12.00d	0%	23-May-25	10-Jun-25	0.00d	Pharr_5D_H
dw04023000	Concrete Slab/Insulation - Area D	12.00d	12.00d	0%	27-Jun-25	15-Jul-25	0.00d	Pharr_5D_H
Structural		70.00d	70.00d		11-Jun-25	18-Sep-25	0.00d	
dw04026000	Start Structural	0.00d	0.00d	0%	11-Jun-25		0.00d	Pharr_5D_H
dw04027000	Structural CMU - Area A	18.00d	18.00d	0%	11-Jun-25	07-Jul-25	0.00d	Pharr_5D_H
dw04030000	Structural CMU - Area D	20.00d	20.00d	0%	16-Jul-25	12-Aug-25	0.00d	Pharr_5D_H

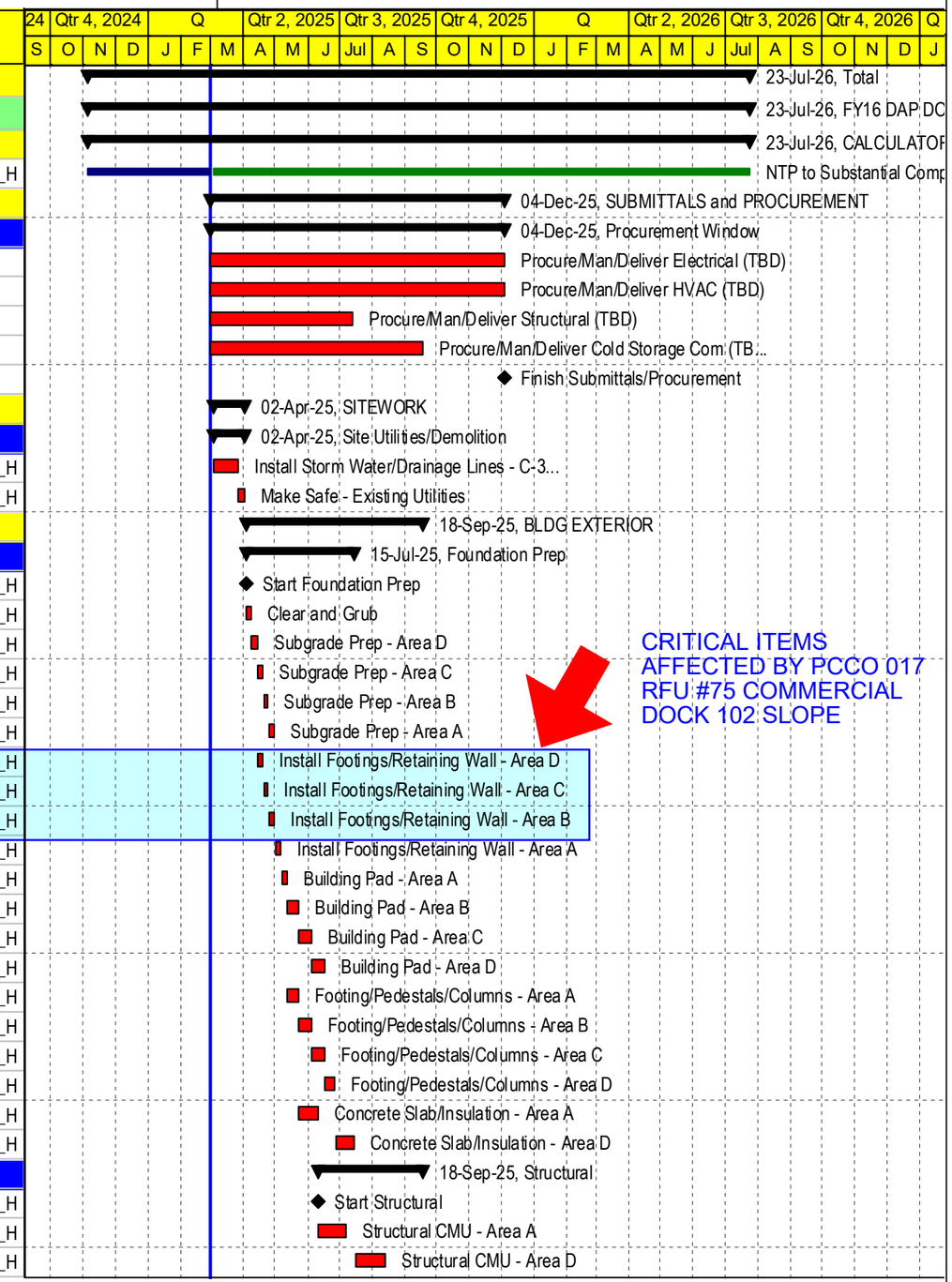

Remaining Level of Effort | Actual Level of Effort | Actual Work | Remaining Work | Critical Remainin...

TASK filter: Longest Path.

BASELINE SCHEDULE

FY16 DAP DOCK EXPANSION PHASE I, PHASE II, AGRICULTURAL RE-BID - Baseline | Critical Path by WBS | 232471510_Baseline, Data Date: 28-Feb-25

Activity ID	Activity Name	Original Duration	Remaining Duration	Physical % Complete	Start	Finish	Total Float	Calendar
dw04031000	Structural Erection/Joist/Decking - Area A	26.00d	26.00d	0%	14-Jul-25	18-Aug-25	0.00d	Pharr_5D_H
dw04034000	Structural Erection/Joist/Decking - Area D	26.00d	26.00d	0%	13-Aug-25	18-Sep-25	0.00d	Pharr_5D_H
dw04035000	Finish Structural	0.00d	0.00d	0%		18-Sep-25	0.00d	Pharr_5D_H
Envelope		45.00d	45.00d		08-Jul-25	09-Sep-25	0.00d	
dw04046000	Start Envelope	0.00d	0.00d	0%	08-Jul-25		0.00d	Pharr_5D_H
dw04047000	Exterior Framing/W Barrier - Area A	20.00d	20.00d	0%	08-Jul-25	04-Aug-25	0.00d	Pharr_5D_H
dw04048000	Install HM Frames/Doors - Area A	10.00d	10.00d	0%	08-Jul-25	21-Jul-25	0.00d	Pharr_5D_H
dw04049000	Install Alum Doors/Windows - Area A	10.00d	10.00d	0%	22-Jul-25	04-Aug-25	0.00d	Pharr_5D_H
dw04050000	Install Exterior Sheathing - Area A	10.00d	10.00d	0%	05-Aug-25	18-Aug-25	0.00d	Pharr_5D_H
dw04051000	Install Metal Panels - Area A	15.00d	15.00d	0%	19-Aug-25	09-Sep-25	0.00d	Pharr_5D_H
COLD STORAGE		95.00d	95.00d		19-Sep-25	06-Feb-26	0.00d	
Cold Storage Installations		95.00d	95.00d		19-Sep-25	06-Feb-26	0.00d	
dw05001000	Start Cold Storage	0.00d	0.00d	0%	19-Sep-25		0.00d	Pharr_5D_H
dw05002000	Install Floor and Visquine	10.00d	10.00d	0%	19-Sep-25	02-Oct-25	0.00d	Pharr_5D_H
dw05003000	Install Insulated Metal Panels	32.00d	32.00d	0%	03-Oct-25	19-Nov-25	0.00d	Pharr_5D_H
dw05004000	Trim Insulated Metal Panels	10.00d	10.00d	0%	20-Nov-25	04-Dec-25	0.00d	Pharr_5D_H
dw05005000	Install Insulated Doors	8.00d	8.00d	0%	05-Dec-25	16-Dec-25	0.00d	Pharr_5D_H
dw05006000	Install Refrigeration/Coil/Unit/Pipe	23.00d	23.00d	0%	17-Dec-25	21-Jan-26	0.00d	Pharr_5D_H
dw05007000	Install Drains	4.00d	4.00d	0%	22-Jan-26	27-Jan-26	0.00d	Pharr_5D_H
dw05008000	Install Controls and Wiring	2.00d	2.00d	0%	28-Jan-26	29-Jan-26	0.00d	Pharr_5D_H
dw05009000	Refrigeration Startup and Comm	6.00d	6.00d	0%	30-Jan-26	06-Feb-26	0.00d	Pharr_5D_H
dw05010000	Finish Cold Storage	0.00d	0.00d	0%		06-Feb-26	0.00d	Pharr_5D_H
BLDG INTERIOR		179.00d	179.00d		10-Sep-25	28-May-26	0.00d	
MEP Rough-In		89.00d	89.00d		10-Sep-25	20-Jan-26	0.00d	
dw07001000	Start MEP Rough-In	0.00d	0.00d	0%	10-Sep-25		0.00d	Pharr_5D_H
dw07002000	RI Electrical - Lab	30.00d	30.00d	0%	10-Sep-25	22-Oct-25	0.00d	Pharr_5D_H
dw07004000	RI HVAC - Lab	29.00d	29.00d	0%	23-Oct-25	04-Dec-25	0.00d	Pharr_5D_H
dw07008000	Install Electrical Equipment	30.00d	30.00d	0%	05-Dec-25	20-Jan-26	0.00d	Pharr_5D_H
dw07009000	Install HVAC Equipment	30.00d	30.00d	0%	05-Dec-25	20-Jan-26	0.00d	Pharr_5D_H
dw07010000	Finish MEP Rough-In	0.00d	0.00d	0%		20-Jan-26	0.00d	Pharr_5D_H
Walls/Ceilings		102.00d	102.00d		10-Sep-25	06-Feb-26	0.00d	
dw07011000	Start Walls/Ceilings	0.00d	0.00d	0%	10-Sep-25		0.00d	Pharr_5D_H
dw07012000	Metal Frame/Block - Lab	25.00d	25.00d	0%	10-Sep-25	15-Oct-25	0.00d	Pharr_5D_H
dw07013000	Drywall/Insulation - Lab	25.00d	25.00d	0%	16-Oct-25	20-Nov-25	0.00d	Pharr_5D_H
dw07014000	Tape/Float/Texture - Lab	21.00d	21.00d	0%	21-Nov-25	22-Dec-25	0.00d	Pharr_5D_H
dw07015000	Fireproof/Caulk/Seal - Lab	21.00d	21.00d	0%	21-Nov-25	22-Dec-25	0.00d	Pharr_5D_H
dw07016000	Ceiling Grid - Lab	21.00d	21.00d	0%	21-Nov-25	22-Dec-25	0.00d	Pharr_5D_H
dw07017000	Ceiling Grid Fixtures - Lab	18.00d	18.00d	0%	23-Dec-25	20-Jan-26	0.00d	Pharr_5D_H
dw07018000	Ceiling HVAC Devices - Lab	18.00d	18.00d	0%	23-Dec-25	20-Jan-26	0.00d	Pharr_5D_H
dw07019000	Ceiling Fire Alarm Devices - Lab	18.00d	18.00d	0%	23-Dec-25	20-Jan-26	0.00d	Pharr_5D_H
dw07020000	Final Trimout - Lab	13.00d	13.00d	0%	21-Jan-26	06-Feb-26	0.00d	Pharr_5D_H
dw07021000	Power On/HVAC On - Lab	0.00d	0.00d	0%		06-Feb-26	0.00d	Pharr_5D_H

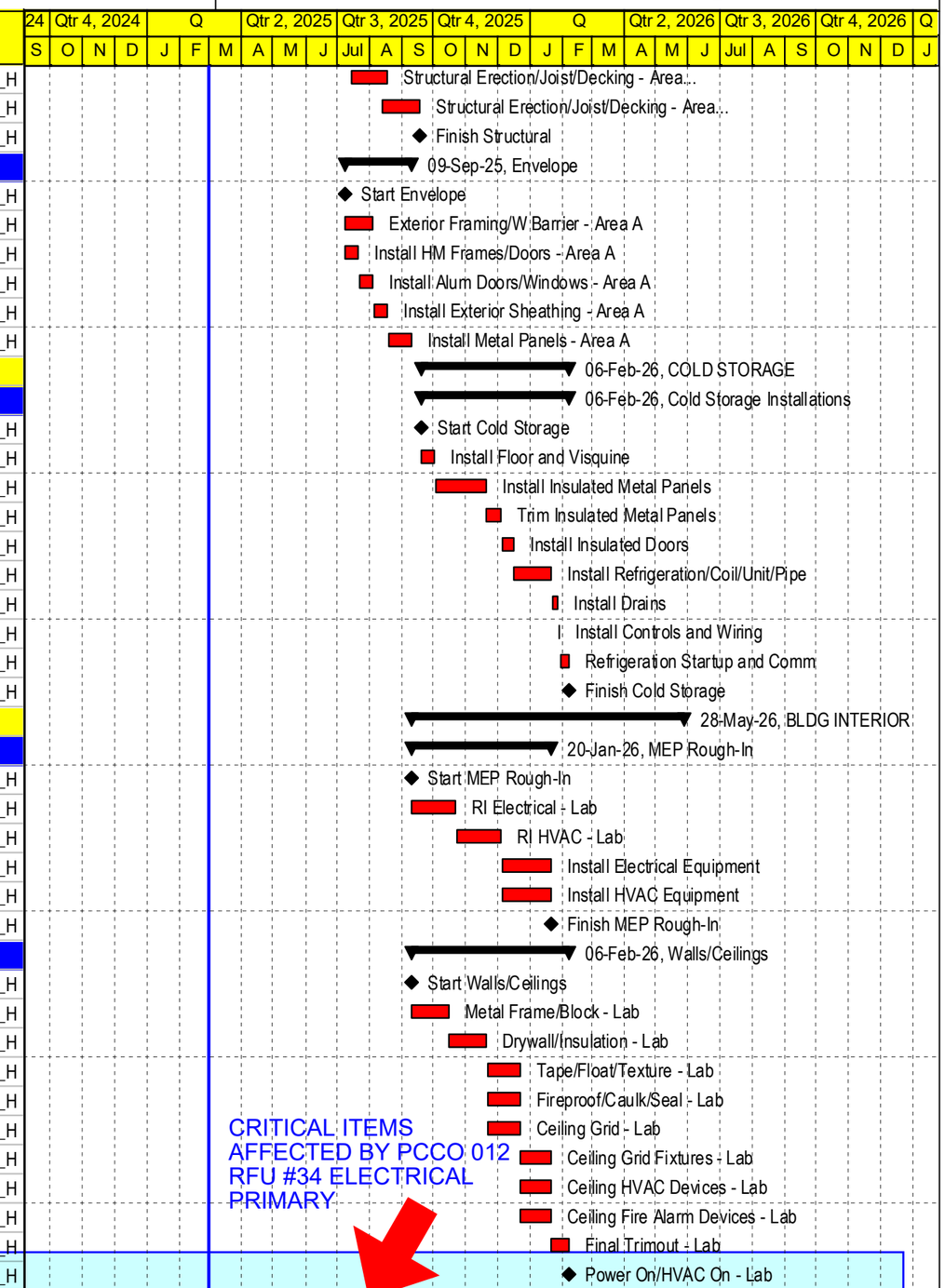

Remaining Level of Effort | Actual Level of Effort | Actual Work | Remaining Work | Critical Remainin...

TASK filter: Longest Path.

BASELINE SCHEDULE

Activity ID	Activity Name	Original Duration	Remaining Duration	Physical % Complete	Start	Finish	Total Float	Calendar
dw07022000	Power On/HVAC On - Cold Storage	0.00d	0.00d	0%		06-Feb-26	0.00d	Pharr_5D_H
dw07023000	Finish Walls/Ceilings	0.00d	0.00d	0%		06-Feb-26	0.00d	Pharr_5D_H
Finishes/Installations		**77.00d**	**77.00d**		**09-Feb-26**	**28-May-26**	**0.00d**	
dw07024000	Start Finishes and Installations	0.00d	0.00d	0%	09-Feb-26		0.00d	Pharr_5D_H
dw07026000	Install Millwork - Lab	21.00d	21.00d	0%	09-Feb-26	10-Mar-26	0.00d	Pharr_5D_H
dw07027000	Install Flooring - Lab	20.00d	20.00d	0%	11-Mar-26	07-Apr-26	0.00d	Pharr_5D_H
dw07028000	Interior Paint - Lab	20.00d	20.00d	0%	08-Apr-26	05-May-26	0.00d	Pharr_5D_H
dw07030000	Install Partitions/Accessories - Lab	16.00d	16.00d	0%	06-May-26	28-May-26	0.00d	Pharr_5D_H
dw07031000	Install Doors/Hardware - Lab	16.00d	16.00d	0%	06-May-26	28-May-26	0.00d	Pharr_5D_H
dw07032000	Finish Lab Building	0.00d	0.00d	0%		28-May-26	0.00d	Pharr_5D_H
CLOSEOUT		**39.00d**	**39.00d**		**29-May-26**	**23-Jul-26**	**0.00d**	
Owner Fur Equip/Furn		**15.00d**	**15.00d**		**29-May-26**	**18-Jun-26**	**0.00d**	
dw09001000	Start Owner Furnished	0.00d	0.00d	0%	29-May-26		0.00d	Pharr_7D
dw09002000	Install Owner Furnished Furniture	21.00d	21.00d	0%	29-May-26	18-Jun-26	0.00d	Pharr_7D
dw09003000	Install Owner Furnished Equipment	21.00d	21.00d	0%	29-May-26	18-Jun-26	0.00d	Pharr_7D
dw09004000	Finish Owner Furnished	0.00d	0.00d	0%		18-Jun-26	0.00d	Pharr_7D
Test/Inspect/Closing		**24.00d**	**24.00d**		**19-Jun-26**	**23-Jul-26**	**0.00d**	
dw09005000	Start Test/Inspect	0.00d	0.00d	0%	19-Jun-26		0.00d	Pharr_5D_H
dw09006000	Test/Balance - Lab	10.00d	10.00d	0%	19-Jun-26	02-Jul-26	0.00d	Pharr_5D_H
dw09007000	Commission - Lab	10.00d	10.00d	0%	06-Jul-26	17-Jul-26	0.00d	Pharr_5D_H
dw09008000	Test/Balance - Cold Storage	10.00d	10.00d	0%	19-Jun-26	02-Jul-26	0.00d	Pharr_5D_H
dw09009000	Commission - Storage	10.00d	10.00d	0%	06-Jul-26	17-Jul-26	0.00d	Pharr_5D_H
dw09010000	Final Adjustment/Correction	4.00d	4.00d	0%	20-Jul-26	23-Jul-26	0.00d	Pharr_5D_H
dw09011000	Certificate of Occupancy	0.00d	0.00d	0%		23-Jul-26	0.00d	Pharr_5D_H
dw09012000	Substantial Completion	0.00d	0.00d	0%		23-Jul-26	0.00d	Pharr_5D_H

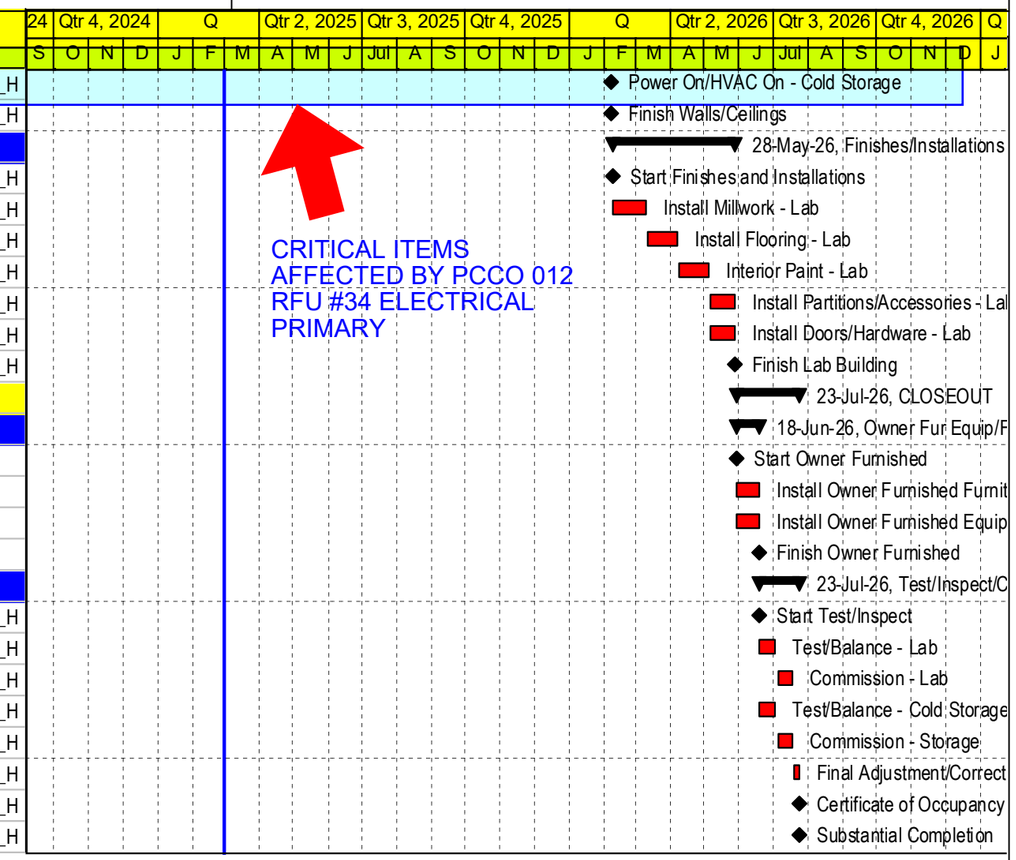

JUNE CRITICAL PATH SCHEDULE

FY16 DAP DOCK EXPANSION PHASE I, PHASE II, AGRICULTURAL RE-BID - June 2025 | Critical Path by WBS | 232471510_June2025, Data Date: 25-Jun-25

Activity ID	Activity Name	Original Duration	maining Duration	Physical % Complete	Start	Finish	Total Float	Calendar
Total		442.00d	299.00d		04-Nov-24 A	02-Sep-26	0.00d	
FY16 DAP DOCK EXPANSION PHASE I, PHASE II, &		442.00d	299.00d		04-Nov-24 A	02-Sep-26	0.00d	
CALCULATORS		425.00d	299.00d		04-Nov-24 A	02-Sep-26	0.00d	
dw00000010 C	NTP to Substantial Completion (workdays)	425.00d	299.00d	35%	04-Nov-24 A	02-Sep-26	0.00d	Pharr_5D_H
SUBMITTALS and PROCUREMENT		179.00d	143.00d		01-May-25 A	22-Jan-26	0.00d	
Procurement Window		179.00d	143.00d		01-May-25 A	22-Jan-26	0.00d	
dw01014000 LL	Procure/Man/Deliver Electrical (TBD)	232.00d	211.00d	85%	01-May-25 A	22-Jan-26	0.00d	Pharr_7D
dw01015000 LL	Procure/Man/Deliver HVAC (TBD)	262.00d	211.00d	55%	01-May-25 A	22-Jan-26	0.00d	Pharr_7D
dw01016000 LL	Procure/Man/Deliver Structural (TBD)	114.00d	74.00d	25%	01-May-25 A	07-Sep-25	0.00d	Pharr_7D
dw01017000 LL	Procure/Man/Deliver Cold Storage Com (TI	184.00d	130.00d	65%	01-May-25 A	02-Nov-25	0.00d	Pharr_7D
dw01018000 LL	Finish Submittals/Procurement	0.00d	0.00d	0%		22-Jan-26	0.00d	Pharr_7D
SITEWORK		99.00d	13.00d		12-Feb-25 A	15-Jul-25	0.00d	
Site Utilities/Demolition		99.00d	13.00d		12-Feb-25 A	15-Jul-25	0.00d	
dw03005000	Install Storm Water/Drainage Lines - C-303	18.00d	2.00d	80%	03-Mar-25 A	27-Jun-25	0.00d	Pharr_5D_H
dw03011000	Make Safe - Existing Utilities	5.00d	6.00d	90%	01-Mar-25 A	03-Jul-25	0.00d	Pharr_5D_H
dw03015100 D	EXISTING/UNFORSEEN UGROUND CON	76.00d	13.00d	70%	12-Feb-25 A	15-Jul-25	0.00d	Pharr_5D_H
BLDG EXTERIOR		152.00d	95.00d		03-Mar-25 A	10-Nov-25	0.00d	
Foundation Prep		94.00d	37.00d		03-Mar-25 A	18-Aug-25	0.00d	
dw04003000	Subgrade Prep - Area D	4.00d	6.00d	80%	03-Mar-25 A	03-Jul-25	0.00d	Pharr_5D_H
dw04004000	Subgrade Prep - Area C	4.00d	10.00d	75%	03-Mar-25 A	10-Jul-25	0.00d	Pharr_5D_H
dw04005000	Subgrade Prep - Area B	4.00d	10.00d	50%	15-Apr-25 A	10-Jul-25	0.00d	Pharr_5D_H
dw04007000	Install Footings/Retaining Wall - Area D	4.00d	5.00d	85%	24-Apr-25 A	02-Jul-25	0.00d	Pharr_5D_H
dw04008000	Install Footings/Retaining Wall - Area C	4.00d	13.00d	50%	24-Apr-25 A	15-Jul-25	0.00d	Pharr_5D_H
dw04009000	Install Footings/Retaining Wall - Area B	4.00d	13.00d	30%	20-May-25 A	15-Jul-25	0.00d	Pharr_5D_H
dw04010000	Install Footings/Retaining Wall - Area A	4.00d	4.00d	0%	16-Jul-25	21-Jul-25	0.00d	Pharr_5D_H
dw04011000	Building Pad - Area A	4.00d	4.00d	0%	22-Jul-25	25-Jul-25	0.00d	Pharr_5D_H
dw04012000	Building Pad - Area B	4.00d	4.00d	0%	16-Jul-25	21-Jul-25	0.00d	Pharr_5D_H
dw04013000	Building Pad - Area C	4.00d	4.00d	0%	10-Jul-25	15-Jul-25	0.00d	Pharr_5D_H
dw04014000	Building Pad - Area D	4.00d	4.00d	0%	03-Jul-25	09-Jul-25	0.00d	Pharr_5D_H
dw04016000	Footing/Pedestals/Columns - Area A	6.00d	6.00d	0%	28-Jul-25	04-Aug-25	0.00d	Pharr_5D_H
dw04020000	Concrete Slab/Insulation - Area A	10.00d	10.00d	0%	05-Aug-25	18-Aug-25	0.00d	Pharr_5D_H
Structural		43.00d	43.00d		19-Aug-25	20-Oct-25	0.00d	
dw04026000	Start Structural	0.00d	0.00d	0%	19-Aug-25		0.00d	Pharr_5D_H
dw04027000	Structural CMU - Area A	13.00d	13.00d	0%	19-Aug-25	05-Sep-25	0.00d	Pharr_5D_H
dw04031000	Structural Erection/Joist/Decking - Area A	30.00d	30.00d	0%	08-Sep-25	20-Oct-25	0.00d	Pharr_5D_H
Envelope		45.00d	45.00d		08-Sep-25	10-Nov-25	0.00d	
dw04046000	Start Envelope	0.00d	0.00d	0%	08-Sep-25		0.00d	Pharr_5D_H
dw04047000	Exterior Framing/W Barrier - Area A	20.00d	20.00d	0%	08-Sep-25	03-Oct-25	0.00d	Pharr_5D_H
dw04048000	Install HM Frames/Doors - Area A	10.00d	10.00d	0%	08-Sep-25	19-Sep-25	0.00d	Pharr_5D_H
dw04049000	Install Alum Doors/Windows - Area A	10.00d	10.00d	0%	22-Sep-25	03-Oct-25	0.00d	Pharr_5D_H
dw04050000	Install Exterior Sheathing - Area A	10.00d	10.00d	0%	06-Oct-25	20-Oct-25	0.00d	Pharr_5D_H
dw04051000	Install Metal Panels - Area A	15.00d	15.00d	0%	21-Oct-25	10-Nov-25	0.00d	Pharr_5D_H
COLD STORAGE		95.00d	95.00d		03-Nov-25	23-Mar-26	0.00d	
Cold Storage Installations		95.00d	95.00d		03-Nov-25	23-Mar-26	0.00d	
dw05001000	Start Cold Storage	0.00d	0.00d	0%	03-Nov-25		0.00d	Pharr_5D_H
dw05002000	Install Floor and Visquine	10.00d	10.00d	0%	03-Nov-25	17-Nov-25	0.00d	Pharr_5D_H
dw05003000	Install Insulated Metal Panels	32.00d	32.00d	0%	18-Nov-25	05-Jan-26	0.00d	Pharr_5D_H
dw05004000	Trim Insulated Metal Panels	10.00d	10.00d	0%	06-Jan-26	20-Jan-26	0.00d	Pharr_5D_H

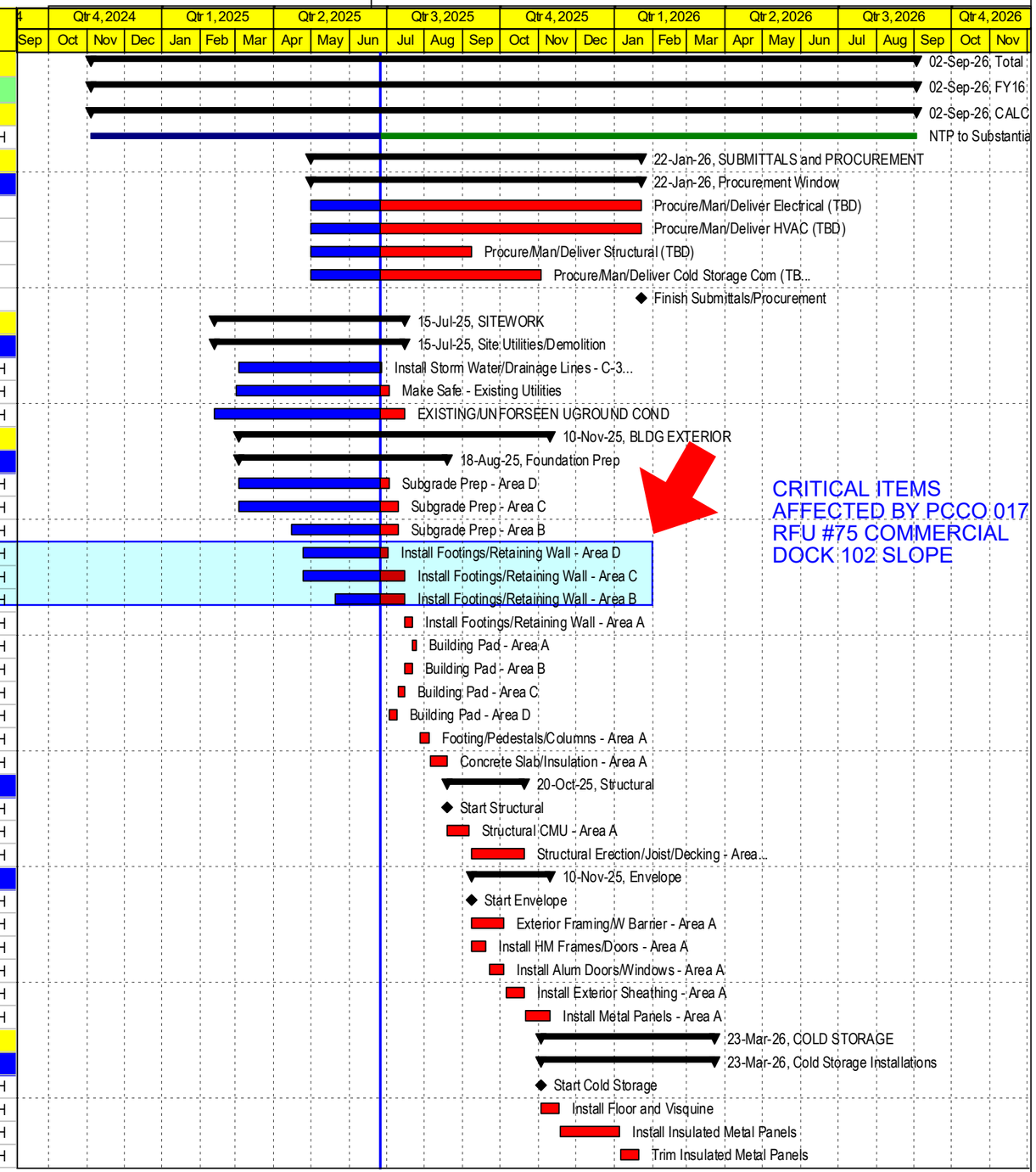

CRITICAL ITEMS AFFECTED BY PCCO 017 RFU #75 COMMERCIAL DOCK 102 SLOPE

Remaining Level of Effort | Actual Level of Effort | Actual Work | Remaining Work | Critical Remainin...

TASK filter: Longest Path.

JUNE CRITICAL PATH SCHEDULE

FY16 DAP DOCK EXPANSION PHASE I, PHASE II, AGRICULTURAL RE-BID - June 2025 | Critical Path by WBS | 232471510_June2025, Data Date: 25-Jun-25

Activity ID	Activity Name	Original Duration	maining Duration	Physical % Complete	Start	Finish	Total Float	Calendar
dw05005000	Install Insulated Doors	8.00d	8.00d	0%	21-Jan-26	30-Jan-26	0.00d	Pharr_5D_H
dw05006000	Install Refrigeration/Coil/Unit/Pipe	23.00d	23.00d	0%	02-Feb-26	05-Mar-26	0.00d	Pharr_5D_H
dw05007000	Install Drains	4.00d	4.00d	0%	06-Mar-26	11-Mar-26	0.00d	Pharr_5D_H
dw05008000	Install Controls and Wiring	2.00d	2.00d	0%	12-Mar-26	13-Mar-26	0.00d	Pharr_5D_H
dw05009000	Refrigeration Startup and Comm	6.00d	6.00d	0%	16-Mar-26	23-Mar-26	0.00d	Pharr_5D_H
dw05010000	Finish Cold Storage	0.00d	0.00d	0%		23-Mar-26	0.00d	Pharr_5D_H
BLDG INTERIOR		165.00d	165.00d		12-Nov-25	09-Jul-26	0.00d	
MEP Rough-In		78.00d	78.00d		12-Nov-25	06-Mar-26	0.00d	
dw07001000	Start MEP Rough-In	0.00d	0.00d	0%	12-Nov-25		0.00d	Pharr_5D_H
dw07002000	RI Electrical - Lab	24.00d	24.00d	0%	12-Nov-25	16-Dec-25	0.00d	Pharr_5D_H
dw07003000	RI Fire Alarm - Lab	24.00d	24.00d	0%	17-Dec-25	22-Jan-26	0.00d	Pharr_5D_H
dw07004000	RI HVAC - Lab	24.00d	24.00d	0%	17-Dec-25	22-Jan-26	0.00d	Pharr_5D_H
dw07008000	Install Electrical Equipment	30.00d	30.00d	0%	23-Jan-26	06-Mar-26	0.00d	Pharr_5D_H
dw07009000	Install HVAC Equipment	30.00d	30.00d	0%	23-Jan-26	06-Mar-26	0.00d	Pharr_5D_H
dw07010000	Finish MEP Rough-In	0.00d	0.00d	0%		06-Mar-26	0.00d	Pharr_5D_H
Walls/Ceilings		89.00d	89.00d		12-Nov-25	23-Mar-26	0.00d	
dw07011000	Start Walls/Ceilings	0.00d	0.00d	0%	12-Nov-25		0.00d	Pharr_5D_H
dw07012000	Metal Frame/Block - Lab	20.00d	20.00d	0%	12-Nov-25	10-Dec-25	0.00d	Pharr_5D_H
dw07013000	Drywall/Insulation - Lab	20.00d	20.00d	0%	11-Dec-25	09-Jan-26	0.00d	Pharr_5D_H
dw07014000	Tape/Float/Texture - Lab	20.00d	20.00d	0%	12-Jan-26	09-Feb-26	0.00d	Pharr_5D_H
dw07015000	Fireproof/Caulk/Seal - Lab	20.00d	20.00d	0%	12-Jan-26	09-Feb-26	0.00d	Pharr_5D_H
dw07016000	Ceiling Grid - Lab	20.00d	20.00d	0%	12-Jan-26	09-Feb-26	0.00d	Pharr_5D_H
dw07017000	Ceiling Grid Fixtures - Lab	18.00d	18.00d	0%	10-Feb-26	06-Mar-26	0.00d	Pharr_5D_H
dw07018000	Ceiling HVAC Devices - Lab	18.00d	18.00d	0%	10-Feb-26	06-Mar-26	0.00d	Pharr_5D_H
dw07019000	Ceiling Fire Alarm Devices - Lab	18.00d	18.00d	0%	10-Feb-26	06-Mar-26	0.00d	Pharr_5D_H
dw07020000	Final Trimout - Lab	11.00d	11.00d	0%	09-Mar-26	23-Mar-26	0.00d	Pharr_5D_H
dw07021000	Power On/HVAC On - Lab	0.00d	0.00d	0%		23-Mar-26	0.00d	Pharr_5D_H
dw07022000	Power On/HVAC On - Cold Storage	0.00d	0.00d	0%		23-Mar-26	0.00d	Pharr_5D_H
dw07023000	Finish Walls/Ceilings	0.00d	0.00d	0%		23-Mar-26	0.00d	Pharr_5D_H
Finishes/Installations		76.00d	76.00d		24-Mar-26	09-Jul-26	0.00d	
dw07024000	Start Finishes and Installations	0.00d	0.00d	0%	24-Mar-26		0.00d	Pharr_5D_H
dw07026000	Install Millwork - Lab	21.00d	21.00d	0%	24-Mar-26	21-Apr-26	0.00d	Pharr_5D_H
dw07027000	Install Flooring - Lab	20.00d	20.00d	0%	22-Apr-26	19-May-26	0.00d	Pharr_5D_H
dw07028000	Interior Paint - Lab	20.00d	20.00d	0%	20-May-26	17-Jun-26	0.00d	Pharr_5D_H
dw07030000	Install Partitions/Accessories - Lab	15.00d	15.00d	0%	18-Jun-26	09-Jul-26	0.00d	Pharr_5D_H
dw07031000	Install Doors/Hardware - Lab	15.00d	15.00d	0%	18-Jun-26	09-Jul-26	0.00d	Pharr_5D_H
dw07032000	Finish Lab Building	0.00d	0.00d	0%		09-Jul-26	0.00d	Pharr_5D_H
CLOSEOUT		39.00d	39.00d		10-Jul-26	02-Sep-26	0.00d	
Owner Fur Equip/Furn		15.00d	15.00d		10-Jul-26	30-Jul-26	0.00d	
dw09001000	Start Owner Furnished	0.00d	0.00d	0%	10-Jul-26		0.00d	Pharr_7D
dw09002000	Install Owner Furnished Furniture	21.00d	21.00d	0%	10-Jul-26	30-Jul-26	0.00d	Pharr_7D
dw09003000	Install Owner Furnished Equipment	21.00d	21.00d	0%	10-Jul-26	30-Jul-26	0.00d	Pharr_7D
dw09004000	Finish Owner Furnished	0.00d	0.00d	0%		30-Jul-26	0.00d	Pharr_7D
Test/Inspect/Closing		24.00d	24.00d		31-Jul-26	02-Sep-26	0.00d	
dw09005000	Start Test/Inspect	0.00d	0.00d	0%	31-Jul-26		0.00d	Pharr_5D_H
dw09006000	Test/Balance - Lab	10.00d	10.00d	0%	31-Jul-26	13-Aug-26	0.00d	Pharr_5D_H
dw09007000	Commission - Lab	10.00d	10.00d	0%	14-Aug-26	27-Aug-26	0.00d	Pharr_5D_H
dw09008000	Test/Balance - Cold Storage	10.00d	10.00d	0%	31-Jul-26	13-Aug-26	0.00d	Pharr_5D_H

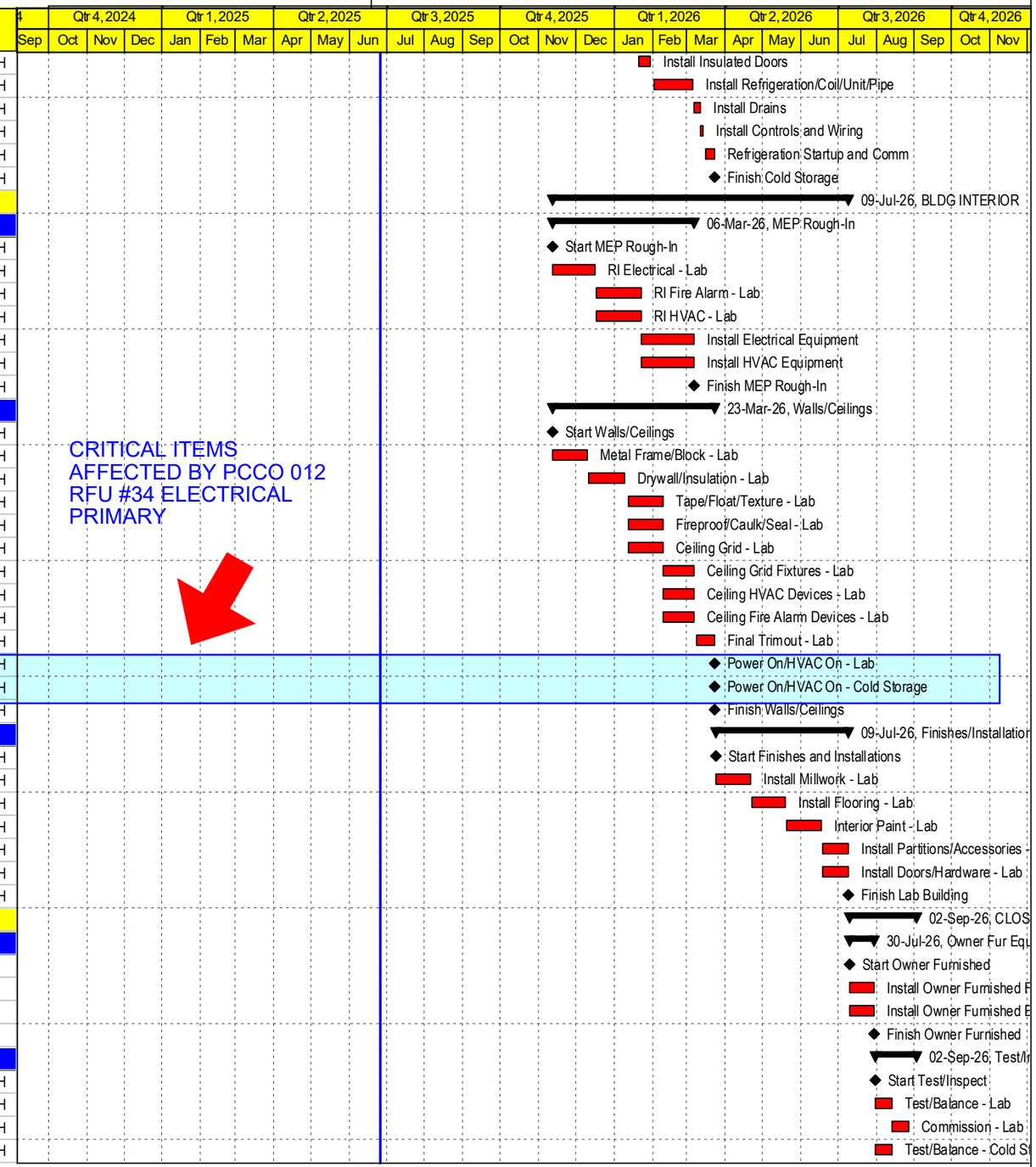

Remaining Level of Effort | Actual Level of Effort | Actual Work | Remaining Work | Critical Remainin...

TASK filter: Longest Path.

JUNE CRITICAL PATH SCHEDULE
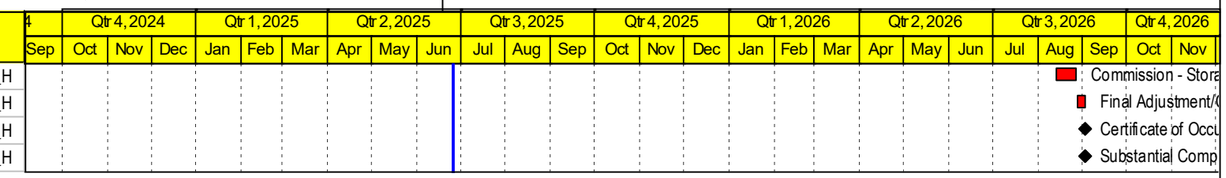
Activity ID	Activity Name	Original Duration	maining Duration	Physical % Complete	Start	Finish	Total Float	Calendar
dw09009000	Commission - Storage	10.00d	10.00d	0%	14-Aug-26	27-Aug-26	0.00d	Pharr_5D_H
dw09010000	Final Adjustment/Correction	4.00d	4.00d	0%	28-Aug-26	02-Sep-26	0.00d	Pharr_5D_H
dw09011000	Certificate of Occupancy	0.00d	0.00d	0%		02-Sep-26	0.00d	Pharr_5D_H
dw09012000	Substantial Completion	0.00d	0.00d	0%		02-Sep-26	0.00d	Pharr_5D_H